249038

JPRS-CST-85-025

1 August 1985

China Report

SCIENCE AND TECHNOLOGY

DTIC QUALITY INSPECTED 4

DISTRIBUTION STATEMENT A
Approved for Public Release
Distribution Unlimited

19990416 122

FBIS FOREIGN BROADCAST INFORMATION SERVICE

REPRODUCED BY
NATIONAL TECHNICAL
INFORMATION SERVICE
U.S. DEPARTMENT OF COMMERCE
SPRINGFIELD, VA. 22161

822
A05

NOTE

JPRS publications contain information primarily from foreign newspapers, periodicals and books, but also from news agency transmissions and broadcasts. Materials from foreign-language sources are translated; those from English-language sources are transcribed or reprinted, with the original phrasing and other characteristics retained.

Headlines, editorial reports, and material enclosed in brackets [] are supplied by JPRS. Processing indicators such as [Text] or [Excerpt] in the first line of each item, or following the last line of a brief, indicate how the original information was processed. Where no processing indicator is given, the information was summarized or extracted.

Unfamiliar names rendered phonetically or transliterated are enclosed in parentheses. Words or names preceded by a question mark and enclosed in parentheses were not clear in the original but have been supplied as appropriate in context. Other unattributed parenthetical notes within the body of an item originate with the source. Times within items are as given by source.

The contents of this publication in no way represent the policies, views or attitudes of the U.S. Government.

PROCUREMENT OF PUBLICATIONS

JPRS publications may be ordered from the National Technical Information Service, Springfield, Virginia 22161. In ordering, it is recommended that the JPRS number, title, date and author, if applicable, of publication be cited.

Current JPRS publications are announced in Government Reports Announcements issued semi-monthly by the National Technical Information Service, and are listed in the Monthly Catalog of U.S. Government Publications issued by the Superintendent of Documents, U.S. Government Printing Office, Washington, D.C. 20402.

Correspondence pertaining to matters other than procurement may be addressed to Joint Publications Research Service, 1000 North Glebe Road, Arlington, Virginia 22201.

JPRS-CST-85-025

1 August 1985

CHINA REPORT

SCIENCE AND TECHNOLOGY

CONTENTS

PEOPLE'S REPUBLIC OF CHINA

NATIONAL DEVELOPMENTS

Hainan Holds Regional Conference on Science, Technology
(Hainan Island Service, 21 Jun 85)..... 1

Xizang Holds Meeting on Science, Technology Plans
(Xizang Regional Service, 23 Jun 85)..... 3

Jiangxi S&T Conference Opens in Nanchang
(Jiangxi Provincial Service, 18 Jun 85)..... 4

APPLIED SCIENCES

Metabolic Data From Workers Contaminated by Tritium Studied
(Huang Jianxue, et. al.; FUSHE FANGHU, Vol 5, No 2, Mar 85)..... 5

New Approaches To Determining Physical Properties in Piston-Cylinder High-Temperature, High-Pressure Device
(Zhang Yun; WULI, Vol 13, No 12, Dec 84)..... 14

LIFE SCIENCES

Situation, Main Task of Pharmaceutical Industry
(Lu Dong; JINGJI RIBAO, 26 Jun 85)..... 23

Pharmaceuticals Control Law Stipulations Issued
(STATE COUNCIL BULLETIN, No 30, 20 Dec 84)..... 26

ENVIRONMENTAL QUALITY

Hunan Strengthens Control Over Industrial Pollution (Hunan Provincial Service, 4 Jun 85)..... 29

Briefs
Mayor Visits During Silt Removal 30

ABSTRACTS

ATOMIC ENERGY

GAONENG WULI YU HE WULI [PHYSICA ENERGIAE FORTIS ET PHYSICA NUCLEARIS] Vol 9, No 2, Mar 85..... 31

CHEMISTRY

YINGYONG HUAXUE [CHINESE JOURNAL OF APPLIED CHEMISTRY] Vol 2, No 1, Mar 85..... 32

GAOFENZI TONGXUN [POLYMER COMMUNICATIONS] No 2, Apr 85..... 38

ENERGY

GAONENG WULI YU HE WULI [PHYSICA ENERGIAE FORTIS ET PHYSICA NUCLEARIS] Vol 9, No 2, Mar 85..... 43

ENGINEERING

JILIN DAXUE ZIRAN KEXUE XUEBAO [ACTA SCIENTIARIUM NATURALIUM UNIVERSITATIS JILINENSIS] No 2, 28 May 85..... 44

ENVIRONMENTAL QUALITY

HUANJING KEXUE [JOURNAL OF ENVIRONMENTAL SCIENCE] No 2, 30 Apr 85..... 47

MEDICINE

ZHONGHUA YIXUE ZAZHI [NATIONAL MEDICAL JOURNAL OF CHINA] No 4, 15 Apr 85..... 48

ZHONGHUA NEIKE ZAZHI [CHINESE JOURNAL OF INTERNAL MEDICINE] No 4, 1985..... 50

MICROBIOLOGY

ZHONGHUA WEISHENGWUXUE HE MIANYIXUE ZAZHI [CHINESE JOURNAL OF MICROBIOLOGY AND IMMUNOLOGY] No 1, Feb 85..... 51

NUCLEAR ENGINEERING

HEDIANZIXUE YU TANCE JISHU [NUCLEAR ELECTRONICS AND DETECTION TECHNOLOGY] Vol 5, No 2, Mar 85..... 54

OCEANOGRAPHY

HAIYANG XUEBAO [ACTA OCEANOLOGICA SINICA] No 3, 15 May 85..... 59

PHYSICS

GAONENG WULI YU HE WULI [PHYSICA ENERGIAE FORTIS ET PHYSICA NUCLEARIS] Vol 9, No 1, Jan 85..... 63

GAONENG WULI YU HE WULI [PHYSICA ENERGIAE FORTIS ET PHYSICA NUCLEARIS] Vol 9, No 2, Mar 85..... 70

WULI XUEBAO [ACTA PHYSICA SINICA] Vol 34, No 3, Mar 85..... 73

NATIONAL DEVELOPMENTS

HAINAN HOLDS REGIONAL CONFERENCE ON SCIENCE, TECHNOLOGY

HK241516 Haikou Hainan Island Service in Mandarin 0400 GMT 21 Jun 85

[Excerpts] The 3-day Hainan regional work conference on science and technology ended yesterday. In his summation speech, Yao Wenxu, secretary of the Hainan Regional CPC Committee, pointed out that properly carrying out reform of the science and technology system is a strategic task for speeding up the exploitation and construction of Hainan. Party committees and government at all levels must strengthen their leadership. All departments concerned must support the reform, support each other, and jointly take up responsibilities to ensure success for the reform of the science and technology system.

Comrade Yao Wenxu said: To properly carry out reform of the region's science and technology system according to the decision of the CPC Central Committee on reform of the science and technology system, we must first grasp the following essential points to make a breakthrough.

1. We must reform the system of allocating funds to research institutes. We must, according to characteristics of different scientific and technological activities, carry out classified control of funds to change the previous method of the state imposing too much control and to eradicate the defect of eating from the same big pot. Meanwhile, we must open all avenues to raise funds and encourage departments, enterprises and social groups to make scientific and technological investments. Banks must actively grant loans to scientific and technological projects and supervise and control the use of the funds.

2. We must promote the process of transforming scientific and technological achievements into commodities, vigorously open up technological markets, actively carry out various technological activities, such as promoting technology transfer, signing technology contracts, calling technological consultation, and providing technological services, so as to meet the development of the socialist commodity economy.

3. We must readjust the organizational structure of the science and technology department and promote coordination and links between scientific research units, designing units, universities and colleges, and production units. Thus, scientific research units can change from closed-type units to

scientific research-business operations so as to avoid the tendency of doing scientific research merely for scientific research.

4. We must reform the management system of scientific and technological personnel, bring into full play the role of the existing scientific and technological personnel, vigorously cultivate and discover new talented people, and create a good environment for bringing up large numbers of talented people and for giving full play to the abilities of talented people.

Distributed at the conference were printed materials about the initial reform of the science and technology system carried out by the South China Tropical Plants Scientific Research Institute, the South China Tropical Plants College, the (Baoding) Tropical Plants Research Institute, the Giongshan County construction company, and the Qionghai County science and technology commission.

(Wang Zongdao), president and researcher of the South China Tropical Plants Scientific Research Institute, gave an introduction on the world's current science and technology.

CSO: 4008/2009

NATIONAL DEVELOPMENTS

XIZANG HOLDS MEETING ON SCIENCE, TECHNOLOGY PLANS

Lhasa Xizang Regional Service in Mandarin 1130 GMT 23 Jun 85

[Excerpts] A Xizang forum on plans for developing science and technology during the Seventh 5-year Plan was held in Lhasa from 18 to 21 June. In accordance with the demands of the regional economic development plan, the participants held lively discussions in close connection with Xizang realities. They got a clear picture of the orientation for the main effort and initially worked out the scientific research tasks. (Mao Rubai), deputy secretary of the regional CPC committee, and Hu Songjie, member of the standing committee of the regional CPC committee, attended and spoke at the forum.

The participants unanimously held: Geographically, the region's science and technology work during the Seventh 5-year Plan should be focused on the basins of Zyluzangbu, Lhasa, and Nianchu rivers. In the field of science, we should focus on animal husbandry, energy, and communications. In research topics, we should focus on applied and developmental research. At the same time, we should step up research in topics with a wide range of applications and short cycles which yield quick results. We should continue to explore the region's natural resources, to lay the foundation for future economic take-off.

We must also replace and improve backward crafts and equipment in the region's existing enterprises, so that they can improve their economic results as quickly as possible.

CSO: 4008/2009

NATIONAL DEVELOPMENTS

JIANGXI S&T CONFERENCE OPENS IN NANCHANG

OW230340 Nanchang Jiangxi Provincial Service in Mandarin 1100 GMT 18 Jun 85

[Excerpts] The Jiangxi Science and Technology Conference opened in Nanchang this morning. Wang Shaofen, secretary of the Provincial Party Committee; Liu Fangren, Ni Xiance, and Xu Qin, deputy secretaries of the Provincial Party Committee; and Jiangxi Governor Zhao Zengyi, and Vice Governors Liu Bin and (Chen Guishun) attended today's opening ceremony.

Ni Xiance, deputy secretary of the Provincial Party Committee and vice governor of Jiangxi, addressed the meeting. Regarding how Jiangxi should implement the CPC Central Committee's decision on restructuring S&T management, he said:

1. Leading comrades at all levels in Jiangxi must earnestly study the CPC Central Committee's decision so as to heighten their understanding of the importance, urgency and necessity in restructuring S&T management.

2. Reform the system of financing S&T work, and rationally plan S&T research. On the basis of growing economy and stronger financial capability, Jiangxi's annual budgets for S&T projects should increase faster than the increase of the province's regular revenues.

3. Broaden the technological market to promote commercialization of technological achievements.

4. Restructure the S&T institutions, and strengthen enterprises' capabilities of absorbing technology and developing new products.

5. Restructure the management of S&T personnel, giving full scope to the role of available personnel.

6. Strengthen the leadership to ensure the smooth progress of reform of S&T management. S&T commissions at all levels must rectify their guiding thinking, projects, and operating methods, so that their work can keep up with the new situation in S&T management.

CSO: 4008/2009

APPLIED SCIENCES

METABOLIC DATA FROM WORKERS CONTAMINATED BY TRITIUM STUDIED

Taiyuan FUSHE FANGHU [RADIATION PROTECTION] in Chinese Vol 5 No 2, Mar 85 pp 81-87

[Article by Huang Jianxue [7806 1696 1331], Ren Baoqing [0117 1405 3237], Chao Desheng [2513 1795 0524], Wang Chunming [3769 2504 2494], Li Yue [2621 6390] and Wu Deqiang [0702 1795 1730]]

[Text] I. Introduction

The metabolic rule of tritium excretion from the human body is one of the bases for establishing radiation protection standards, for estimating the internal radiation dosage caused by tritium, and for considering appropriate medical treatment. In this regard, a large amount of data directly from human beings have appeared in foreign literature.[1-7] With the exception of a few experiments based on volunteers, most of the data were obtained from contaminated workers resulting from accidents or inadequate protective measures. Since it is difficult to completely prevent tritium infiltration and diffusion in a production or research environment, workers at some organizations in this country have also been contaminated by tritium. By analyzing and processing urinary excretion data of these workers, we have obtained a certain amount of metabolic data of tritium.

II. Urinary Excretion Equation for Tritium After Absorption of Tritium Oxide and Analysis of Tritium Metabolic Kinetics

Tritium exists in nature mostly in the form of tritium gas (TH, T_2) and tritium oxides (THO, T_2O), but the latter can be more readily absorbed by the human body. Past research has shown that when tritium is absorbed by the body in the form of tritium oxide, a large portion (approximately 99 percent of the absorbed amount) remains in the body fluid and is rapidly excreted with urine, sweat, dung and exhalation according to the water metabolic rule of the human body. A small portion (approximately 1 percent of the absorbed amount) is combined with human organisms to form the so-called organism-bonded tritium; these tritium will re-enter the body fluid through the process of hydrogen interchange and metabolic process of human organisms, hence its excretion is much slower. The urinary excretion equation which reflects the excretion rule of tritium from the human body can be expressed in the form of a sum of two or three exponential functions:

$$\begin{cases} C_u(t) = A\exp\left(-\frac{0.693}{T_1}t\right) + B\exp\left(-\frac{0.693}{T_2}t\right) + C\exp\left(-\frac{0.693}{T_3}t\right) \\ A+B+C=1 \end{cases}$$

where $C_u(t)$ is the urinary tritium concentration at time t after ingestion normalized by the initial tritium concentration $C_u'(0)$; the half Time T_1(d) reflects the excretion rate of the fast excretion process, and the half times T_2 and T_3 reflect the excretion rates of the slow excretion process; A, B, C are constants.

Among the subjects of our observations, seven workers had ingested large amounts of tritium due to an accident. After the accident, the urinary tritium concentration of these workers were monitored for 150-200 days. The data from these workers were fitted to obtain the following urinary excretion equations:

$$C_u(t) = 0.9899\exp\left(-\frac{0.693}{9.00}t\right) + 0.0101\exp\left(-\frac{0.693}{42.5}t\right), \qquad \text{Case A}$$

$$C_u(t) = 0.9671\exp\left(-\frac{0.693}{7.56}t\right) + 0.0329\exp\left(-\frac{0.693}{22.5}t\right), \qquad \text{Case B}$$

$$C_u(t) = 0.9942\exp\left(-\frac{0.693}{6.84}t\right) + 0.0058\exp\left(-\frac{0.693}{48.5}t\right), \qquad \text{Case C}$$

$$C_u(t) = 0.9970\exp\left(-\frac{0.693}{8.10}t\right) + 0.0030\exp\left(-\frac{0.693}{46.5}t\right), \qquad \text{Case D}$$

$$C_u(t) = 0.9797\exp\left(-\frac{0.693}{8.10}t\right) + 0.0203\exp\left(-\frac{0.693}{37.0}t\right), \qquad \text{Case E}$$

$$C_u(t) = 0.9912\exp\left(-\frac{0.693}{11.1}t\right) + 0.0088\exp\left(-\frac{0.693}{57.0}t\right), \qquad \text{Case F}$$

$$C_u(t) = 0.9629\exp\left(-\frac{0.693}{10.0}t\right) + 0.0371\exp\left(-\frac{0.693}{26.4}t\right), \qquad \text{Case G}$$

Figure 1 shows the tritium excretion curve for case D.

The excretion equation given in References 2-4 are sums of two exponential functions, which are similar to the equations obtained in this paper. The data used by S. Sanders, et al.[5] to fit the excretion equation were taken over a long period, and the resulting excretion equations contain three exponential terms. Table 1 presents the half times of tritium metabolic rates of the urinary excretion equations given by different authors.

S. Sanders, et al.[5] have used a three-compartment metabolic model to analyze the metabolic kinetics of a subject ingested with tritium oxide. Following their approach, we have used a two-compartment model shown in Figure 2 to

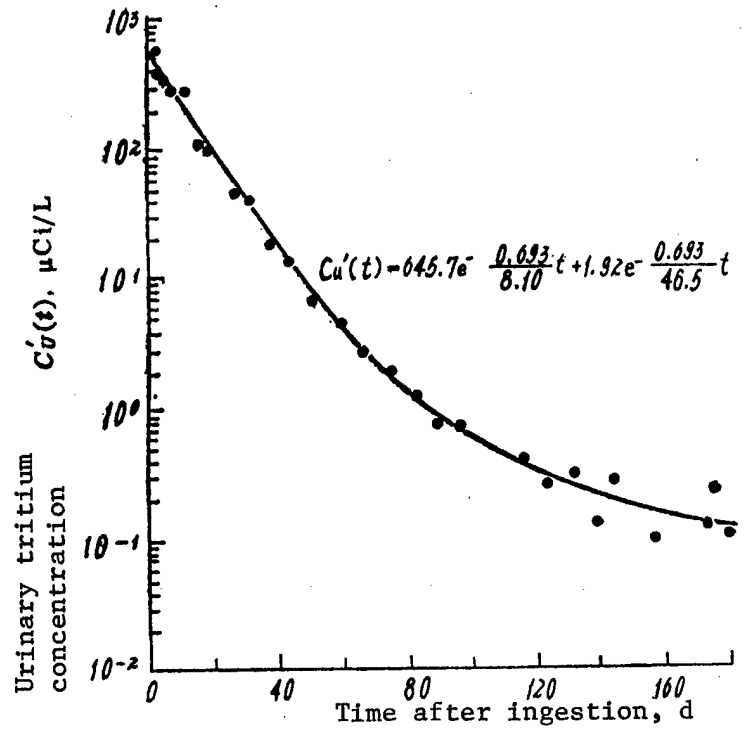

Figure 1. Urinary Tritium Excretion Curve for Case D

Table 1. Observed Half Times of Urinary Tritium Excretion Equation Which Reflect the Metabolic Rates of Tritium

Author	Number of observed cases	Half time d			Monitoring period d
		T_1	T_2	T_3	
W. S. Snyder[2]	1	8.7	34	—	155
P. Henry[3]	1	7.5	63.3	—	250
M. I. Balonov[4]	6	~12	39—76	—	~300
S. Sanders[5]	1	6.14	23.4	344	415
This paper	7	6.8—11.1	22.5—57	—	150—200

describe the tritium metabolic kinetics for cases A-G (see appendix for detailed mathematical analysis); the resulting intercompartment metabolic constants α, β, γ are listed in Table 2. On the basis of this model, the relative amount of retained tritium X(t) and Y(t) in compartments X and Y for case D normalized by the initial tritium ingestion are shown in Figure 3.

It can be seen from Figure 3 and Table 2 that when tritium is absorbed in the form of tritium oxide and then distributed uniformly in the body fluid, most of the tritium is being excreted immediately, and a small portion is bonded with the organisms. The bonded tritium reaches a maximum value 20-30 days after ingestion, then it begins to move into the body fluid as the tritium content in the body fluid drops rapidly. During the first several weeks

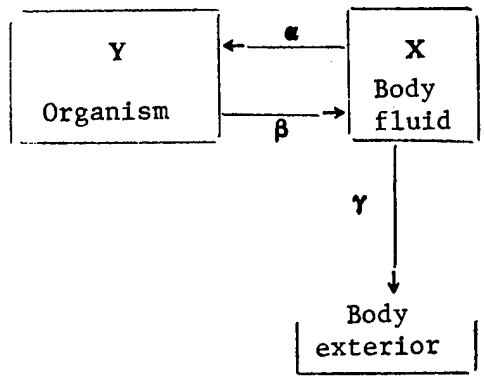

Figure 2. Two-Compartment Model Used in the Analysis of Metabolic Kinetics After Ingestion of Tritium Oxide

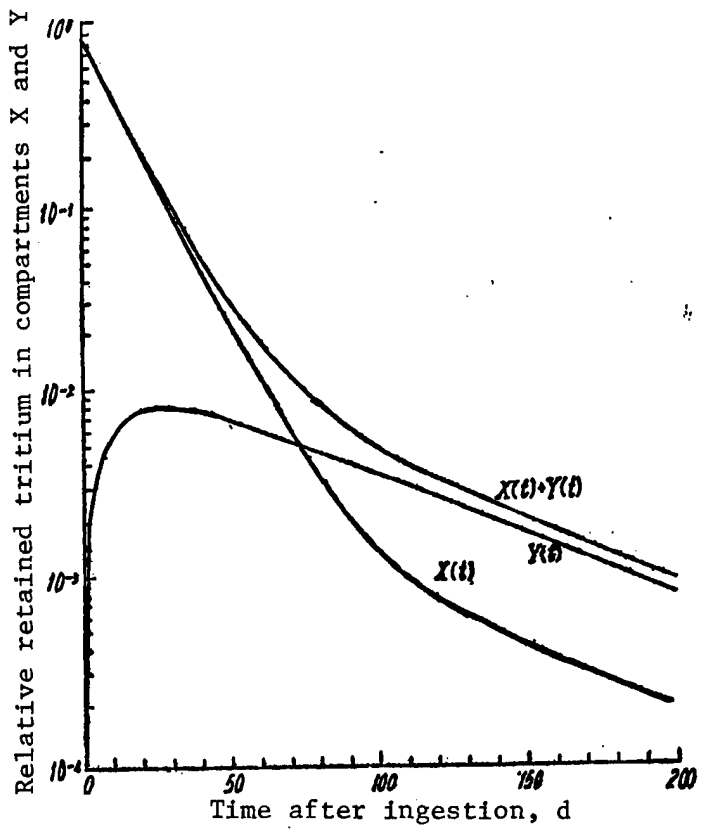

Figure 3. Relative Retained Tritium in the Body for Case D (Two-compartment model)

Table 2. Metabolic Constants of Tritium Oxide for Seven Cases

Case	Metabolic constants, d^{-1}		
	α	β	γ
A	0.0022	0.017	0.074
B	0.0036	0.033	0.086
C	0.0029	0.015	0.098
D	0.0010	0.015	0.085
E	0.0044	0.020	0.080
F	0.0018	0.013	0.060
G	0.0024	0.028	0.065

after tritium ingestion, the tritium found in the urine comes primarily from compartment X (body fluid), therefore, the first half time T_1 in the excretion equation is a quantitative measure of the metabolic constant γ; more than 100 days after ingestion, the excreted tritium in the urine primarily comes from organism-bonded tritium, hence the second half time T_2 in the excretion equation is basically determined by the metabolic constant β.

III. Half Times of Tritium Oxide in Human Bodies

In estimating the internal radiation dosage after ingestion of tritium oxide, a single exponential function is often used to approximate the fractional retained tritium R(t)

$$R(t) = \exp(-\frac{0.693}{T} t)$$

where the half time T is determined by the excretion rate of the fast excretion process of tritium oxide.

Over the years, we have accumulated urinary tritium excretion data on 99 workers after single ingestion of tritium oxide (except for the 7 cases mentioned above, most of them were involved in cases of minor contamination), and have processed the data to determine their individual half times T. The results show that the observed half times of these 99 subjects range from 4.5 days to 16 days, with a mean of 8.6 days and standard deviation of 2.4 days. The distribution of T is presented in the form of a histogram in Figure 4. Table 3 lists the observed T values given by different authors.

Further analysis of the half times of these 99 workers shows that the value of T is affected by ambient temperature. Among the 99 workers, 49 of them ingested tritium between May and October (summer and fall), and the mean T value is 8.1 days (standard deviation 2.4 days); the other 50 workers ingested tritium during the periods January-April and November-December (winter and spring), and the corresponding T value is 9.1 days (standard deviation 2.2 days). Significance tests show that the difference is significant. Therefore,

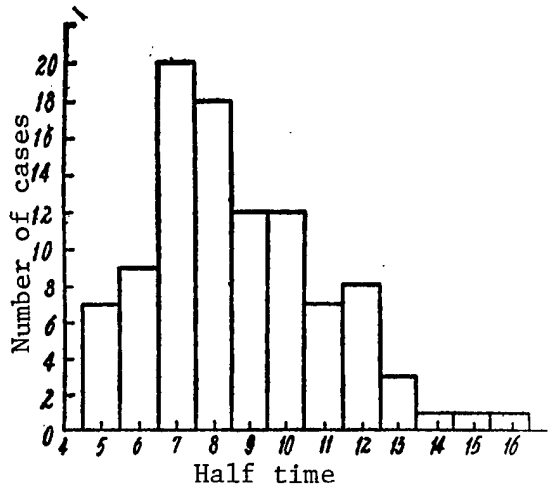

Figure 4. Distribution of Half Times of Tritium Oxide for 99 Workers

Table 3. Comparison of Observed Half Times of Tritium Oxide in Human Bodies

Author	Number of observed cases	Half time T, d		
		Range	Mean value	Standard deviation
F.E. Butler[6]	310	4-18	9.5	4.1
R.U. Osborne	8	6.5-12.5	9.8	
E.A. Pinson	8	9.3-13	11.5	
M.I. Balonov[4]	12	--	12	
This paper	99	4.5-16	8.6	2.4

tritium excretion is faster during warm seasons. This phenomenon can be explained by the fact that higher ambient temperature speeds up the water metabolism in the human body.

IV. "Abnormal" Tritium Excretion Rate From a Worker Who Had Touched Tritium With His Hands

In one incident, a worker accidentally touched the metal parts and absorbent cotton which were contaminated with tritium. The observed tritium excretion rate for this case is shown in Figure 5. It is seen that during the first 3-4 days after contact, the tritium excretion rate is "abnormally" high; the half time is roughly estimated to be in the range of 0.2-0.4 days; after 4 days, the excretion rate returned to "normal," and the half time increased to 8.9 days.

On the basis of the urinary tritium excretion curve shown in Figure 5, one can further predict that tritium is initially absorbed through the skin into

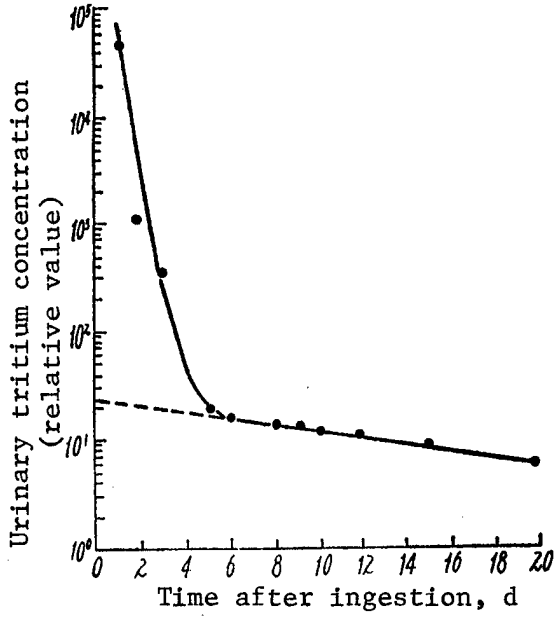

Figure 5. "Abnormal" Urinary Tritium Excretion Curve for a Worker Who Accidentally Touched Tritium With His Hands (The first data point was measured 23 hours after contact)

the body fluid in the form of some organic compound (possibly ethyl alcohol). Through experiments conducted on volunteers, J.D. Eakins, et al.[7] have shown that when the skin of a human hand or forearm is in contact with tritium-contaminated metals, certain organic compound can be formed through isotope exchange or other chemical reactions and enter the body. They made the observation that during the first 1-2 days after contacting tritium, there is a much higher concentration of organic compounds containing tritium than tritium oxide in the urine. The urinary tritium excretion curve shows that the first half time of the organic compound containing is 0.1-0.4 days, and the second half time is 1-2.2 days; on the other hand, the first half time of tritium oxide is 9-16 days. In Reference 8, it was discovered from close observations of the urinary tritium excretion of a person who had directly touched a metal surface contaminated with tritium that the half time of organic compound containing tritium was between 4.7 hours and 9 hours, whereas the half time of tritium oxide was 8 days. Our predictions are consistent with these experimental results. However, for the case being considered in this paper, the conditions and mechanisms for producing the organic compounds which enter the body may be different from those of the paper by J.D. Eakins, et al. All their subjects touched the metal surface contaminated with tritium; and the reason that tritium can be formed into an organic compound capable of entering the body is because the human body itself provides the conditions for tritium to take part in isotope exchange or other chemical reactions. In our experiment, the hand was in contact with the metal parts and alcohol-dipped absorbent cotton both contaminated with tritium; under these conditions, it is possible that the highly skin-permeable ethyl alcohol may be tritiumized. Furthermore, in our case the ratio between the concentration of organic compound containing tritium and that of the tritium oxide was as high as 2000 (see Figure 5), which

is much higher than the corresponding ratios reported in References 7 and 8. This also reflects possible differences in the conditions and mechanisms for producing the organic compounds that enter the body.

The authors wish to express their thanks to researcher Wu Dechang and Comrade Gong Yifeng for reviewing this paper.

REFERENCES

1. Woodard, H.Q., HASL-229, 1970.

2. Snyder, W.S., et al., ORNL-3697, 1964 pp 173-177.

3. Henry, P., "Assessment of Radioactive Contamination in Man," IAEA, 1972 p 641.

4. Balonov, M.I., et al., HEALTH PHYSICS, No 27, 1964 p 367.

5. Sanders, S. and Reinig, W.C., DP-MS-66-77, 1966.

6. Butler, F.E., "Assessment of Radioactivity in Man, Vol II," IAEA, 1964 p 431.

7. Eakins, J.D., et al., HEALTH PHYSICS, No 28, 1975 p 213.

8. Wang Chaoqing, et al., RADIATION PROTECTION, No 2, 1982 p 95.

Appendix

Mathematical Analysis of the Two-Compartment Metabolic Model for Tritium Oxide in Human Body

On the basis of the two-compartment metabolic model shown in Figure 2, the relative retained tritium in the two compartments X(t) and Y(t), when normalized with respect to the initial amount of tritium entering the body, should obey the following differential equations:

$$\left.\begin{aligned} \frac{dX(t)}{dt} &= -(\alpha+\gamma)X(t)+\beta Y(t) \\ \frac{dY(t)}{dt} &= \alpha X(t) - \beta Y(t) \end{aligned}\right\} \qquad (1)$$

and the initial conditions are X(t=0) = 1; Y(t=0) = 0.

Equation (1) can be solved using the method of Laplace transform to yield:

$$\left.\begin{aligned} X(t) &= \frac{p_1+\beta}{p_1-p_2}e^{p_1 t} - \frac{p_2+\beta}{p_1-p_2}e^{p_2 t} \\ Y(t) &= \frac{\alpha}{p_1-p_2}\left(e^{p_1 t} - e^{p_2 t}\right) \end{aligned}\right\} \qquad (2)$$

where p_1 and p_2 are the roots of the second-order scalar equation

$$S^2 + (\alpha+\beta+\gamma)\ S+\beta\gamma=0 \tag{3}$$

i.e.,

$$\left.\begin{aligned} p_1 &= \frac{-(\alpha+\beta+\gamma) + \sqrt{(\alpha+\beta+\gamma)^2-4\beta\gamma}}{2} \\ p_2 &= \frac{-(\alpha+\beta+\gamma) - \sqrt{(\alpha+\beta+\gamma)^2-4\beta\gamma}}{2} \end{aligned}\right\} \tag{4}$$

Assume that the urinary tritium excretion equation contains only two exponential terms, i.e.,

$$C_u(t) = Ae^{-\lambda_1 t} + Be^{-\lambda_2 t} \tag{5}$$

and noting that A + B = 1 and Y(t=0) = 1, we have

$$X\ (t) \equiv C_u(t) \tag{6}$$

Thus,

$$p_1 = -\lambda_2 \tag{7}$$

$$p_2 = -\lambda_1 \tag{8}$$

$$\frac{p_1+\beta}{p_1-p_2} = B \tag{9}$$

$$-\ \frac{p_2+\beta}{p_1-p_2} = A \tag{10}$$

From equation (4) and equations (7)-(10) we obtain

$$\alpha = -\frac{(\beta+p_1)(\beta+p_2)}{\beta} = \frac{AB(\lambda_1-\lambda_2)^2}{B(\lambda_1-\lambda_2)+\lambda_2} \tag{11}$$

$$\beta = B(\lambda_1-\lambda_2)+\lambda_2 \tag{12}$$

$$\gamma = \frac{p_1 p_2}{\beta} = \frac{\lambda_1\lambda_2}{B(\lambda_1-\lambda_2)+\lambda_2} \tag{13}$$

3012
CSO: 4008/363

APPLIED SCIENCES

NEW APPROACHES TO DETERMINING PHYSICAL PROPERTIES IN PISTON-CYLINDER HIGH-TEMPERATURE, HIGH-PRESSURE DEVICE

Beijing WULI [PHYSICS] in Chinese Vol 13 No 12, Dec 84 pp 742-745, 714

[Article by Zhang Yun [1728 0061], Shen Zhongyi [3088 0022 3015], Yin Xiujun [3009 1485 0680], Chu Shaoyan [0328 1421 1484][1)] and He Shouan [0149 1108 1344] of the Physics Research Institute of the Chinese Academy of Sciences: "Measurement Techniques for Determining Physical Properties at High Temperature and High Pressure Using Piston Cylinder Chambers"]

[Text] I. Introduction

High pressure has a unique effect and significance in basic and applied research in solid state physics. Measurement of physical properties under high pressure is the means of high pressure research. Its major content is how to produce various high pressure devices and measurement techniques so as to apply various measurement principles to the high pressure environment and eliminate or at least greatly dampen the interference which a high temperature and high pressure environment has on measurement so as to prevent measurement loss as well as to guarantee the required precision of measurement.

The merits of piston cylinder containers are: the structure is simple, the determination of pressure and temperature is accurate, and it is easy to bring measuring leads directly out of the high pressure cavity. Thus, one can efficiently and conveniently measure many kinds of behavior under high temperature and high pressure. Presently there are at least 70 domestic and foreign laboritories which possess this type container[1] of which many use the equipment to engage in research measurement.[2-7] But at present we lack a systematic exposition concerning internal measurement techniques of such devices. For many years now we have done various kinds of measurement work with an improved piston cylinder high temperature, high pressure system. Since some kinds of physical measuring methods are known to everyone, this article discusses those common technical problems with these methods encountered under high pressure conditions and measures adopted in order to resolve these problems and will not touch on the specific contents of any concrete measuring method.

1) Of the Nanchang Aeronautics School.

II. Brief Account of Vessels and Sample Assembly

The inner diameter of the YG15 carbide alloy vessel is ϕ20mm and the piston uses YG6 of YG6X alloy. The maximum pressure in the vessel is 40-45kbar. Its structure and internal sample assembly is like in Figure 1 [with high pressure differential thermal analysis (DTA) as an example]. The sample is located in the center of the pressure cavity surrounded on all sides by the pressure media. They form concentric tubular bushings and are closely fit. A tubular heating element is made from high resistivity graphite. A thermocouple in the center of the cavity and the sample are in close contact. The measuring leads are configured according to the shape and characteristics of the sample to be measured and according to the requirements of the measurement. They and the thermocouple together pass through a hole in the center of the upper conduction post and a hole between the anvil and pad through a horizontal channel leading out to standard pressure space. The graphite heating element on one end has the YG6 piston as an electrode and the other end is in contact with a metallic conducting post passing through the upper section anvil pad leading in the heating current. The wall outside the specimen assembly is spread with molybdenum disulfide oil or enclosed in lead foil to reduce friction between the media and the inner wall of the vessel. For a detailed structural description see Reference 2.

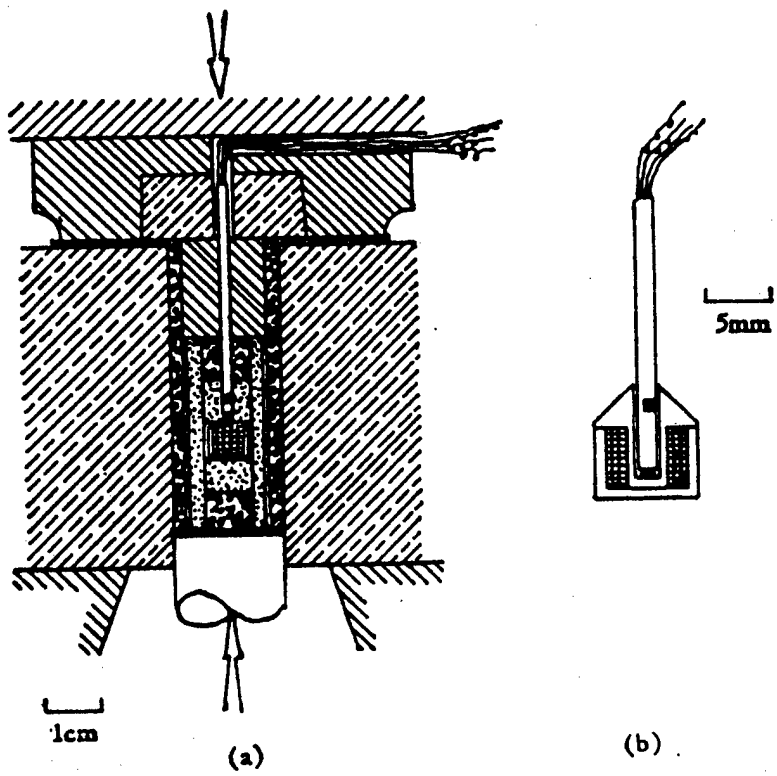

Figure 1. Structure of a Piston Cylinder High Pressure Vessel (The figure represents two different kinds of high pressure DAT sample assemblies.)

Key: steel, carbide alloy, pyrophyllite, boron nitride, graphite, sample

III. Temperature Distribition in the Cavity and Sensitivity of High Pressure DTA Measurements

High pressure DTA measurement methods reported in several references are relatively coarse and their results are not sufficiently ideal. Because the differential thermal base line is severely sloped and bent the noise interference is very bad and consequently the phase change peaks are not clear even to the degree that they are completely concealed. Obviously, because of the restrictions of the environment in a high pressure cavity, those kinds of measurement methods which are extremely common under normal pressure become considerably difficult. Base line sloping is caused by the temperature gradient which exists inside the cavity. This temperature gradient is still more severe at high temperatures (Figure 2).

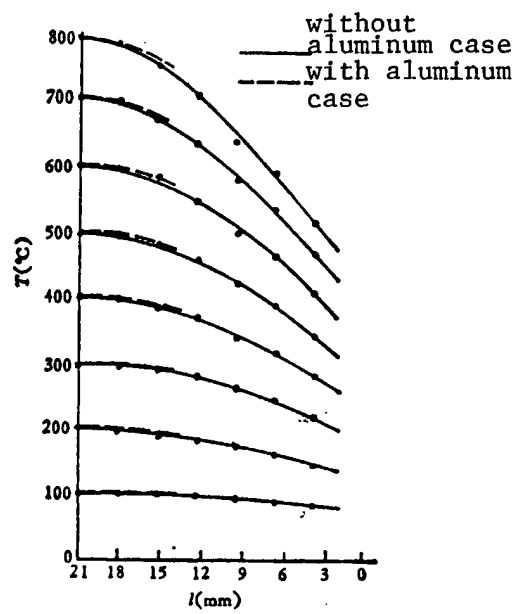

Figure 2. Axial Temperature Distribution in a Piston Cylinder Vessel (Broken lines represent conditions when there is an aluminum box. The horizontal coordinate, l, is the distance from the upper conducting post.)

One can make use of the good thermal conductivity of metal to increase the thermal homogeneity of the sample. By placing an aluminum case in the cavity, the thermal homogeneity can be clearly improved. (See Figure 2) The improved sample box structure [see Figure 1(b)] inserts the thermocouple in the center of the sample and the node of the comparative thermocouple is also located at a corresponding place in the sample box. The effect of homogeneity of the sample box makes it so the thermal difference between the two couple nodes is reduced down to its lowest limit.

After the above improvements, the thermal differential base line can attain a level value. In addition, if in the circuit for measurement one uses a base line gradient adjustment circuit (Figure 3), the amplification power for ΔT can

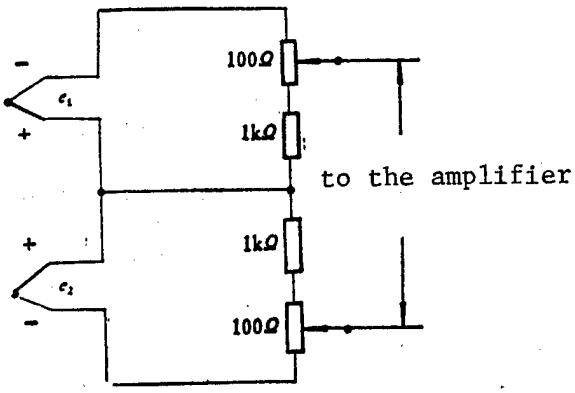

Figure 3. Slope Adjustment Circuit in High Pressure DTA (Using a NiCr-NiSi thermocouple.)

exceed 300. The resolution ratio of the signal and the measurement sensitivity are both increased. A program controlled temperature system under high pressure[8] guarantees uniformly constant heating speed, improving the efficiency of phase change detection. Figure 4 is the phase change thermal differential curve of $NaNO_2$ under high pressure obtained using this method. At 20kbar, $NaNO_2$ has four phase changes from room temperature to 400°C. Of these, $NaNO_2$ (I) ⇄ $NaNO_2$ (II) is a second order phase change, possessing very little calorific response. Generally in high pressure thermal differential curves we are only able to see bends and heat peaks do not emerge.[9] In our measurements, however, we recorded definite peaks of only 1/100°C, which indicates very high sensitivity.

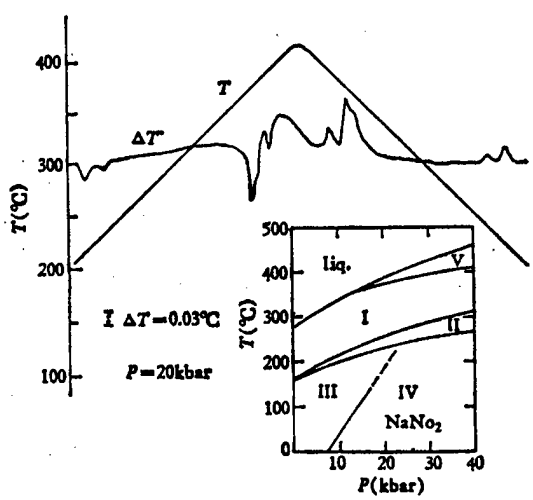

Figure 4. Differential Thermal Curve of $NaNO_2$ Under High Pressure. The lower right corner is a P-T phase diagram of $NaNO_2$.

There is another kind of sample assembly method that can be used to reduce the temperature gradient's interference with measurement. This method uses a sample box with about 1mm thick laminations and replaces the point thermocouple with a plate thermocouple. This way the contact area between the test sample and the thermocouple is increased several fold and detection efficiency and sensitivity can be greatly improved. With this arrangement, a sample of only tens of milligrams will produce clear heat peaks. The other merit of this kind of assembly is that under high pressure the various parts do not easily interpenetrate, consequently reducing the possibility of damage during heating.

Other interference factors with temperature measurement under high pressure are: Insufficient stability of the physical and chemical properties or insufficient dryness of the pressure media and the possibility of minor decomposition of the sample itself under high temperature and pressure. Deformations due to friction, elasticity and plasticity of the media when pressurized with the release of internal stored up energy during subsequent heating can constitute measurement noise. (This type of interference is very severe in "pressure differential thermal methods."[2]) But after several heatings, this sort of noise frequently can be greatly reduced. Moreover, granular samples after pressurization experience extrusion effects between grains having very large separations compared to hydrostatic conditions. This not only can produce noise during heating but also has the potential to produce direct influences on the process of the phase change itself. Early foreign work used the method of incorporating soft material filler in granular samples. This seems not to have been very feasible. We think that melting the sample once in situ in the pressure cavity previous to measurement in order to remove the extrusion condition is perhaps a better method.

IV. Certain Problems With Aggragate Part Structure Designs for Measurement in the Pressure Chamber

1. Selection of pressure media

The pressure media surrounding the sample and test cell in the pressure cavity occupies the major portion of the pressure chamber volume. Rational selection of their varieties and the mode of configuration in the pressure cavity are an important part of structural design. Pyrophyllite is the most convenient and easily obtained pressure medium and is also easily worked and shaped. But because its behavior during heating can produce changes it is not suitable for use in relatively precise measurements. We feel it is more suitable to use granular pressed talc powder at low pressures (above 800°C it also can decompose and metamorphize) and at high pressure to use agglomerated blocks of hexagonal boron nitride. Agglomerated hexagonal boron nitride has fine

---

2) "Pressure differential thermal method" refers to DTA measurements carried out under a fixed temperature, changing the pressure to induce phase changes. When the phase boundary runs nearly parallel to the temperature axis, fixed pressure varied temperature "thermal differential thermal method" (i.e. general high pressure DTA method) frequently has difficulty detecting phase boundaries.

physical and chemical stability as well as electrical insulating behavior at high temperatures and it can be worked into intricately fine parts. Its drawback is its costly price so it can only be used in measurements where the requirements are rather high. Presently the disparity in pressure transmission performance of nationally produced hexagonal boron nitride is relatively large. It is necessary to use boron nitride medium in which the hexagonal lattice has matured completely before one is able to obtain good hydrostatic pressure behavior. Frequently one can use a unitized construction of several kinds of media (such as using pyrophyllite on the outside and using hexagonal boron nitride inside near the sample and test cell) to bring into play the several properties of each type of material as well as reducing the consumption of expensive material.

Frequently in measurements, granular pressured pressure media cannot be dispensed with. Solid media, whether pyrophyllite or agglomerated hexagonal boron nitride, all possess a certain machine strength. At low pressures they are capable of supporting external forces and cannot transfer even quasihydrostatic pressure to the sample and actually cannot achieve very good pressure transmission effects, and when fragmentary can also cause shearing, faulting and deformation in the media in the pressure chamber. Under conditions where the precision of the assembly of the parts of the entire pressure chamber is not high and the gaps in the fittings are relatively large, these phenomena are frequently quite severe. Consequently, this produces fine deformation or rifts in the sample or damage and short circuit of the measurement leads. Conversely, the strength of granular media are very low and under minute external force they can produce movements. This type of slow uniform movement can transmit pressures which are very small and, in addition, the hydrostatic performance is very good. As long as the pressurizing speed is not too high, they generally will not cause damage to the measurement cell.

Figure 5 is our sample assembly to measure resistance of amorphous state alloys under high pressure and our sample assembly to measure the Curie temperature under high pressure. Because we used granular boron nitride media surrounding the sample, the 20mm long, 1mm wide and .04mm thick resistance sample did not sustain damage under a 30kbar pressure and the recorded resistance-temperature curves were ideal (Figure 6). Measurements of the Curie temperature under high pressure were carried out by use of the alternating current induction method. The primary and secondary coils were both placed inside the high pressure cavity. The coil wire was of diameter .3mm with .2mm between each turn and .7mm separating the concentric primary and secondary coils. After pressurization and heating no breakdown or shorting phenomena occurred with the coils. Using this type of method we measured the Curie temperature of amorphous magnetic alloys.

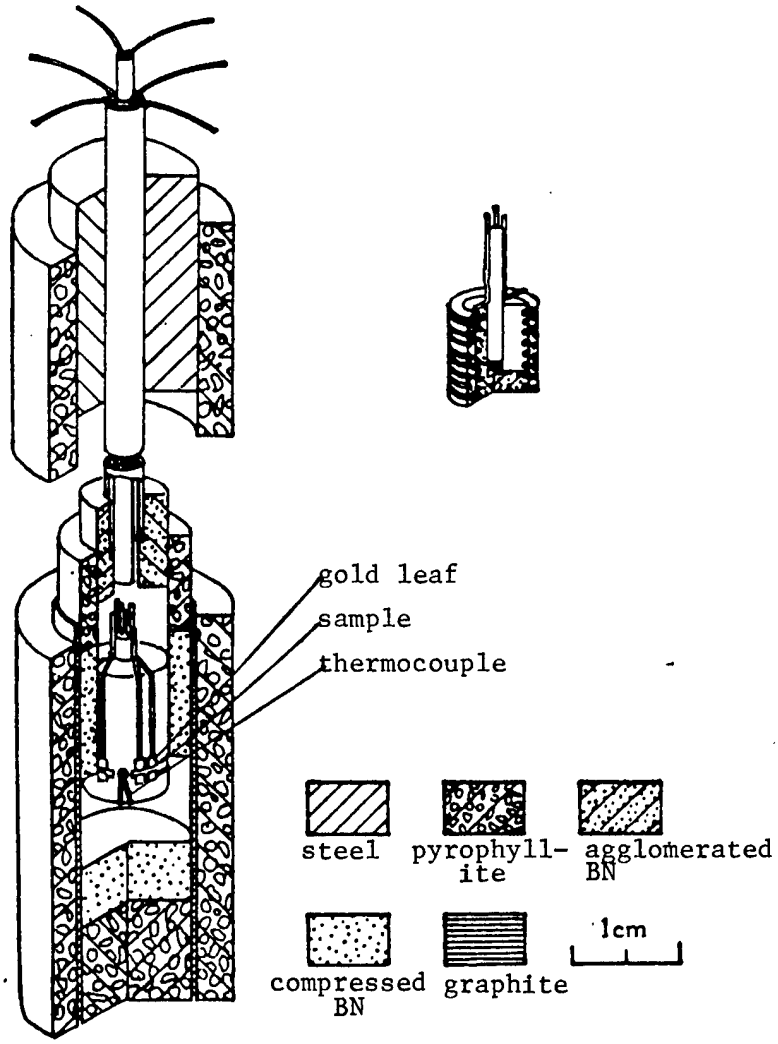

Figure 5. Sample Assembly for Resistance Measurement Under High Pressure (The upper left figure is the structure for Curie temperature measurement.)

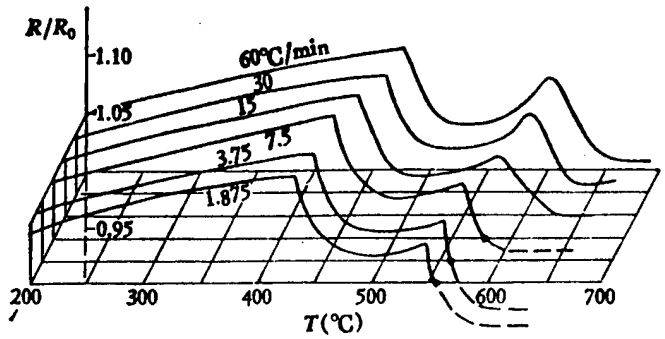

Figure 6. Resistance Changes of $(Fe_{0.1}Co_{0.55}Ni_{0.35})_{78}Si_8B_{14}$ Metallic Glass When Heated Under 30kbar. (The numbers above each curve represent the heating speed.)

2. Assembly and structure of the measuring cell

The assembly of the pressure media, parts and the test element has as motive to guarantee that the required measuring data is obtained successfully and must be designed according to the concrete conditions of each type of measuring method. Some problems of a general nature are recounted below.

Methods for passing leads from the high pressure cavity: In traditional methods the leads are passed through the center conducting post in the upper section of the pressure cavity. They pass through an alumina pipe to insulate them from the outside. In some more complex measurements, frequently it is necessary to pass a considerable number of leads from the high pressure cavity. (We have used nine leads to measure the temperature at seven position in the pressure chamber.) The leads can be passed out by different methods. We use one alumina pipe with inner diameter of ϕ2.5mm on the outside of another ϕ1.5mm binocular alumina pipe. The thermocouple leads passed through the binocular alumina pipe while the other leads went through an armillary gap between two concentric alumina pipes. In order to fix the leads as well as to guarantee their mutual insulation, the armillary gap was filled up with refractory cement. Experiments demonstrate that this structure can sustain pressures above 40kbar without causing damage.

In order to prevent spray and extrusion of the pressure in the high pressure cavity the selection of the conducting post is very important. The conducting post when working in a piston cylinder vessel is assuming many functions. Aside from the heating current from the upper anvil passing through it to the heating element, the measurement leads pass through it to the heating element, the measurement leads pass through its center from the high pressure cavity to normal pressure outside. In addition to this it also works to prevent matter in the high pressure cavity under pressure and thermal effects from extruding through the hole of the upper anvil. It should possess aggregate behaviors of low strength and easy deformation (so that under low pressure it deforms and fixes the center alumina pipe and leads, guaranteeing the stability of it and other parts with continued pressurization) and of relatively high hardness and strength. Our experiments demonstrate that the stainless steel conducting posts generally used abroad are easily extruded and when using complexes of materials with different behaviors to replace the entire conducting post, the leads can break at the boundary between dissimilar materials. The adoption of steel posts which have been end quenched can satisfy experimental requirements very well.

Because the density and compressibility of the various media in the pressure cavity are different, during the process of pressurization, the media unavoidably will produce deformation, shearing and extrusion. At this time the sample and measurement test leads suffer a certain aggregate action from the forces of tension, fragmentation and compression. It is necessary to analyze the tendency and magnitude of deformation and movement of each medium and part during the piston advance for the assembly of the pressure cavity used and to analyze the nature of the external forces which the sample leads undergo during these kinds of motions and to adopt corresponding methods to avoid or reduce the action of disadvantageous forces. On the basis of our experiments, and

based on the conditions recounted above, regions of sudden transition from high pressure to low pressure (e.g. the upper part of the conducting post), the place where the leads pass into the media from the alumina pipe, or on the boundary of two different media, in the pressure cavity with fixed media of quasihydrostatic pressure the test cell can tolerate low magnitude effects of pressure gradients or strain gradients and not fail but they cannot sustain abrupt changes. In regions where sudden changes exist in pressure or strain the test cell is extremely easily damaged.

Another effective means to prevent test cell damage is gradual pressurization. Foreign workers have adopted a pressurization rate of 0.3kbar/min. The aim of gradual pressurization is to gradually increase the pressure and strain in the pressure chamber and consequently to allow their nonuniformities to have opportunity within a sufficiently long time span in which to disperse.

In order successfully to complete a measurement frequently you must try out many kinds of structural schemes. The important thing is one must closely examine and research the conditions in each sample assembly which has failed and the mode of the various failures, analyze the causes that produced the failures, and adopt corresponding preventative measures.

BIBLIOGRAPHY

1. "In High Pressure World Directory, Under the Auspices of Airapt," edited and published by Airapt-Bourgogne, 1982.

2. Cohen, L.H., et al., J. PHYS. CHEM. SOLIDS, No 27, 1966 p 179.

3. Mirwald, P.W., et al., J. GEOPHYS. RES., No 80, 1975 p 1,519.

4. Mirwald, P.W., et al., J. PHYS. CHEM. SOLIDS, No 37, 1976 p 795.

5. Clark, J.B., et al., "High Pressure Science and Technology," Proceed. 7th Airapt Conf. Le Creusot France, 1979, B. Vodar and Ph. Martreu ed. Pergamon Press, Vol 1, 1980 p 363.

6. Bleckwedel, A., et al., "Physics of Solids Under High Pressure," Proceed. Intern. Symp. on the Physics of Solids Under High Pressure, Bad Houuef, Germany, 1981, J.S. Schilling and R. N. Shelton ed., North-Holland Pub. Co, 1981 p 323.

7. Bradley, C.C., "High Pressure Solid State Research," Butterworth and Co. 1969 p 122.

8. Shen Zhongyi [3088 0022 3015], et al., WULI [PHYSICS] in Chinese, Vol 11 No 8, 1982 p 502.

9. Rapoport, J., J. CHEM. PHYS., No 45, 1966 p 2,721.

CSO: 4008/325

LIFE SCIENCES

SITUATION, MAIN TASK OF PHARMACEUTICAL INDUSTRY

HK041450 Beijing JINGJI RIBAO in Chinese 26 Jun 85 p 1

[Article by Lu Dong [0712 2639], minister of the State Economic Commission: "The Situation and Major Tasks of Our Country's Pharmaceutical Trade"]

[Text] Our country's pharmaceutical trade has been greatly developing in recent years. Departments in charge of pharmaceutical trade throughout the country have become a unified management system governing the production and circulation of Western medicine, traditional Chinese medicine, medical apparatus and instruments, scientific research, and education. This plays an important role in strengthening control over pharmaceuticals and promoting the development of the pharmaceutical industry. In 1979, total output value of the pharmaceutical industry throughout the country was about 7 billion yuan. In 1984, it increased to 11.7 billion yuan. The sales volume of pharmaceutical commodities increased from about 7 billion yuan to 11.4 billion yuan. The chaotic situation of recklessly running pharmaceutical factories and indiscriminately producing pharmaceuticals and medical apparatus and instruments left over from the 10 years of turmoil has been initially improved through readjustment. Pharmaceutical product quality has been enhanced as a whole. More than 800 kinds of important achievements in scientific research, including new products, new technology, and new facilities, have been made in various localities. The situation of the short supply of certain kinds of Chinese medicinal materials has also been improved to a certain extent. In the past, 140 kinds of Chinese medicinal materials were in short supply, but the number has now been reduced to about 75 kinds.

Pharmaceutical undertakings develop with the expansion of medical and health care undertakings. However, at present the pharmaceutical trade has not yet been able to fully satisfy the demands of such development. The main problems are that the quality of our Western medicine is poor and the varieties are limited. Today, compared with the advanced world level, we still have a long way to go to improve the pharmaceutical products manufactured in our country. The varieties of a number of products still remain at the level of the 1950's and 1960's. There are many new products in the world, but we cannot produce them yet. We still have to import some costly and high-quality medicines. The development of our traditional Chinese medicine undertakings is very slow and the varieties of some traditional Chinese medicines are far from meeting the demands of the development of traditional Chinese medical science.

Make Great Efforts to Increase Varieties and Improve Quality

We should make product quality our prime concern. The quality of pharmaceuticals and medical apparatus and instruments are particularly important. The quality of pharmaceuticals will directly influence the health, life, and death of our people. The party and government have always paid close attention to the health of the people, and have repeatedly stressed that we should make the quality of pharmaceuticals our prime concern.

To truly improve product quality, we should resolutely implement the "Law on the Management of Pharmaceuticals," which will become effective on 1 July this year. Various units responsible for the production and business of pharmaceuticals should conscientiously do this work well and regard the enforcement of the "Law on the Management of Pharmaceuticals" as a important aspect of strengtheing the management of enterprises. They should make efforts to improve and enhance the production of pharmaceuticals and create better conditions for business to truly ensure the product quality of pharmaceuticals. In the meantime, they should also do the work of standarizing measurements well. At present there are not many kinds of Western medicines produced by us which have reached the pharmaceutical standards of Japan, the United States, Great Britain, and other countries. We still have a long way to go to improve the quality of our medical apparatus. Various units in the pharmaceutical trade should set specific demands on themselves and set goals. They should promote their technological development and accelerate their pharmaceutical enterprises should assign a fairly great number of technological cadres to do the work of technological development in order to produce new products and promote the application of new technology. In the future, more than 30 percent of technological cadres in the pharmaceutical industry should be assigned to do the work of technological development. In addition, we should exert efforts to strengthen control over the pharmaceutical market. We should cooperate with the departments concerned to severely crack down on the activities of producing and selling poor quality and fake medicines. Those pharmaceutical companies, medicinal material companies, and hospitals which have bought fake medicines should destroy them immediately. Those who are guilty in this respect must be brought to account.

Leading comrades of the State Council recently pointed out that ours is a big country abounding in natural wealth. We are also rich in the resources of traditional Chinese medicinal materials. While readjusting the set-up of agricultural production, we should pay attention to developing the production of traditional Chinese medicinal materials. We should organize well the planting, processing, and sales of traditional Chinese medicinal materials. This is a matter of primary importance which concerns the health of our 1 billion people. Various departments concerned should grasp the important matter conscientiously.

The great development of traditional Chinese medical science has set higher demands on Chinese herbal medicines. This is a new situation. In 1983 when the State Council approved and passed on the report by the State Pharmaceutical Administrative Bureau on the problems of traditional Chinese medicines, an open policy was not yet fully implemented in agriculture and foresty. Now the readjustment of industrial systems is being carried out in the rural

areas. It is necessary for us to adopt relevant policies to protect and support various kinds of medicinal resources. We should adopt measures to promote the production and purchase of medicinal materials which are in short supply. To further promote the development of the production of traditional Chinese medicines, forestry and agricultural departments should mutually cooperate with each other. Medicinal material companies at various levels should support the production of traditional Chinese medicines by every possible means. They should formulate a series of policies aimed at encouraging production. In the meantime, measures must be taken to actively straighten out pharmaceutical factories which produce ready-made Chinese medicines. According to statistics issued by the Public Health Ministry, at present there are more than 6,000 kinds of ready-made medicines for sale. Some of them are good, but some others are bad. Very often, people mix the genuine with the fake. Therefore, it is necessary to conscientously straighten out these pharmaceutical factories.

To develop the undertaking of traditional Chinese medicines, we should attach importance to the problem of talented personnel. We should implement the policy for veteran herbalists. At present there are more than 20,000 veteran herbalists working in the trade of traditional Chinese medicines. They play a very important role in improving the quality of the traditional Chinese medicines. If we pay very close attention to their role, conscientiously solve their practical problems, and further arouse their enthusiasm, the quality of our traditional Chinese medicine will certainly be considerably improved.

Strengthening Control Over the Trade

The State Pharmaceutical Administrative Bureau is the department responsible for the pharmaceutical trade throughout the country. It should exercise control over the trade throughout the country. In what respects should the control be exercised? This is a problem which should be explored in practice. At present at least the following work should be done by the bureau: Study and formulate guiding principles for development and work out relevant policies; study and work out plans for development; promote technological progress; organize production and circulation; provide information and consultancy services; and train qualified personnel.

Briefly, pharmaceutical administrative departments at all levels should conscientiously straighten out their vocational guiding thought to serve hygiene and public health work still better so that after efforts are exerted in the years to come, the level of the entire pharmaceutical industry will be markedly enhanced. In so doing, we will be able to further create a new situation in the pharmaceutical trade.

CSO: 4008/2014

LIFE SCIENCES

PHARMACEUTICALS CONTROL LAW STIPULATIONS ISSUED

(Guoyizhizi [0948 6829 6347 1316] (1984) No 638)

Beijing STATE COUNCIL BULLETIN in Chinese No 30, 20 Dec 84 pp 1037-1038

[Stipulations of the State Pharmaceutical Control Bureau on the Implementation of the "Pharmaceuticals Control Law of the PRC" (30 November 1984)]

[Text] The "Pharmaceuticals Control Law of the PRC," (published in issue No 23 of this BULLETIN in 1984) which was deliberated and passed by the Seventh Session of the Sixth NPC Standing Committee, will come into effect on 1 July 1985. In order to conscientiously implement the law, strengthen quality management in the pharmaceuticals industry and guarantee the safety and efficiency of the pharmaceuticals used by the people, the following stipulations are expressly set down:

1. The pharmaceutical management bureaus (or general companies) of provinces, autonomous regions, centrally administered municipalities and cities which determine their own plans [jihua danlie shi 6060 0439 0830 0441 1579] must, on the basis of the requirements stipulated for pharmaceutical production enterprises and pharmaceutical business enterprises by the "Pharmaceuticals Control Law," carry out investigation by stages and in groups of the pharmaceutical production and business enterprises within their areas. Those enterprises which meet the requirements should be issued with a "pharmaceutical production enterprise certificate of quality" or a "pharmaceutical business enterprise certificiate of quality." Those enterprises which are not up to standard should be given a certain period within which they will have to meet the requirements. Those enterprises which hold the "certificate of quality" can apply to the public health administration department for a "pharmaceutical production enterprise license" or a "pharmaceutical business enterprise license."

2. In order to do well in the unified planning and distribution of the pharmaceutical industry and to do well in running pharmaceutical production enterprises, it will be necessary for the unit which is to run the enterprise, in accordance with the limits of investment approval, to submit a request report to operate a pharmaceutical production enterprise to the pharmaceutical management bureau (or general company) of the province, autonomous region, centrally administered municipality or city which determines its own plan. At the same

time, it is also to send details of the proposed products of the factory, the scale of production, the site of the factory and feasibility studies. After these have been examined and approved, the construction work can be carried out in accordance with the capital construction plans. Before a completed pharmaceutical factory can be put into operation, the approving department will carry out checks and will issue a "pharmaceutical production enterprise certificate of quality" if the factory accords with the stipulations laid down by the "Pharmaceuticals Control Law." On the basis of the "certificate of quality" the factory will be able to apply to the public health administration department for a "pharmaceutical production enterprise license."

3. If a unit wishes to operate a pharmaceutical business enterprise, it will be necessary for the unit to apply for approval to the local pharmaceutical control department. Only after approval has been obtained will it be possible to establish the enterprise. Prior to official commencement of business, the enterprise will be examined and checked by the approving departments to see whether the enterprise accords with the necessary requirements for pharmaceutical business enterprises. If it does, it will be issued with a "pharmaceutical business enterprise certificate of quality." On the basis of the "certificate of quality" it will be possible to apply to the public health administration department for a "pharmaceutical business enterprise license."

4. Producing units intending to put into production a new pharmaceutical product which meets national standards and the standard of the province, autonomous region or directly administered city, must hand over market research reports and production plans for the product to the pharmaceutical control bureau (or general company) of the province, autonomous region, centrally administered municipality or city which determines its own plan. After these have been approved, the production preparation work can begin. Prior to putting the product into production, the approving department must carry out an examination. If up to standard, a "pharmaceutical production license" will be issued. The production enterprise must forward trial-produced pharmaceutical products to the pharmaceutical inspection office of the province, autonomous region or centrally administered municipality for examination, and obtain a document of approval.

5. The state will implement special controls for industrially produced narcotic, toxic and stimulant pharmaceuticals. The production and trading of such pharmaceuticals will be carried out in a planned way and will only be carried out by those industrial production and business enterprises which have been approved by the state. The appointed enterprises will be given "licenses" to produce or trade in narcotic and toxic pharmaceuticals.

6. The state pharmaceutical control bureau and the pharmaceutical control bureau (or general company) of the province, autonomous region, centrally administered municipality or city which determines its own plan will be responsible for managing and checking on the quality of pharmaceutical production enterprises and pharmaceutical business enterprises. In regard to offenders against the "Pharmaceuticals Control Law," these bureaus have the authority to give warnings, circulate notices, instruct an enterprise to cease

production, or to close down to carry out readjustments, or to revoke the "pharmaceutical production enterprise certificate of quality," the "pharmaceutical business enterprise certificate of quality" and the "pharmaceutical production license." The quality examination department of an enterprise is responsible for the supervision, examination and laboratory testing of that enterprise's products. It is not permitted to issue certificates of quality for products which are not up to standard. Quality should be stringently controlled. If public health administrative departments, public security organs or industrial and commercial industrial departments discover that a pharmaceutical production or business enterprise has violated the "Pharmaceuticals Control Law," they must investigate the case and affix responsibility. When the administrative penalties are handed down, the pharmaceutical control bureau (or general company) of the province, autonomous region, centrally administered municipality or city which determines its own plan, should positively assist in implementing the punishment.

7. The standards for the "pharmaceutical production enterprise certificate of quality," "pharmaceutical business enterprise certificate of quality," and the "pharmaceutical production license" will be stipulated in a unified way by the state pharmaceutical control bureau. The certificates and licenses will be issued by the pharmaceutical control bureau (or general company) of the province, autonomous region, centrally administered municipality or city which determines its own plan.

CSO: 4005/1090 - END -

ENVIRONMENTAL QUALITY

HUNAN STRENGTHENS CONTROL OVER INDUSTRIAL POLLUTION

HK051317 Changsha Hunan Provincial Service in Mandarin 1100 GMT 4 Jun 85

[Text] Our province has strengthened control over the sources of pollution. From last year to May this year, the whole province raised funds of some 76 million yuan to make arrangements for some 1,200 items to control residue, exhaust gas, and waste liquid. Nine hundred and eighty-five items have been completed and put into operation. The output value of the products as a result of multipurpose use of residue, exhaust gas, and waste liquid has amounted to some 130 million yuan and the annual profits ahve been some 37 million yuan.

As a result of control over residue, exhaust gas, and waste liquid, the amount of pollutants emitted has been reduced and the environmental situation throughout the province has improved very greatly.

With the completion and operation of a large number of projects, including the Changsha City sewage treatment plant, the blast furnace gas recovery and utilization project of the Xiangtan Iron and Steel Plant, and the project for the multipurpose use of alkaline residue in the Shaoyang Nitrogenous Fertilizer Plant, the whole province's capacity for sewage treatment has reached 400 million tons, and its capacity for the treatment of exhaust gas has reached 60 billion cubic meters. After treatment, about one-third of the waste liquid and residue and one-third of the exhaust gas have reached the standards for emissions which have been stipulated by the state.

As a result of comprehensive control over residue, exhaust gas, and waste liquid, the environmental quality has improved and some factories, mines, and enterpirses have acquired relatively great economic results. The annual output value from the comprehensive utilization of residue, exhaust gas, and waste liquid in the Xiangtan Iron and Steel Plant may reach over 10 million yuan, that in the Yueyang Chemical Industrial General Plant may amount to some 4.3 million yuan, and the plants may gain profits of some 2.62 million yuan.

CSO: 4008/2008

ENVIRONMENTAL QUALITY

BRIEFS

MAYOR VISITS DURING SILT REMOVAL--The work of removing silt from the Wangquan River was basically completed by the afternoon of 4 June. Some 4,000 tons of silt and dirt were removed. The Wangquan River, which is located in Haidian District, was dredged last June. Due to the overdischarge of pollutants of the numerous units along the river, the river course began to stink within a year. On 28 May, the Haidian district government began to organize organs, enterprises, and establishments in the district and units which had discharged pollutants to the river to voluntarily participate in the work. On the morning of 4 June, leading comrades, including Chen Xitong, visited the masses participating in the work of removing silt from the Wangquan River. Chen Xitong said: Anyone who causes pollution should be responsible for tackling pollution problems. This is a principle. And any unit which creates pollution should take steps to remove pollution. This is also an education. He also said: Units along the Wangquan River should discharge pollutants within the prescribed limit. Pollutants exceeding such a limit are forbidden. The installation of pipes for polluted water must be speeded up in units without such facilities. After tackling the pollution problems of the Tucheng ditch and the Xiaoyue River, no further pollution will be allowed in the future. [Excerpts] [Beijing BEIJING RIBAO in Chinese 6 Jun 85 p 1 SK]

CSO: 4008/2008

AUTHOR: SHEN Qingbiao [3947 1987 1753]
LI Zhuxia [2621 4376 7209]
TIAN Ye [3944 6851]
et al.

ORG: Institute of Atomic Energy, Academia Sinica

TITLE: "Off-shell Single-particle Potential and Effective Mass Calculation With Skyrme Interactions in Nuclear Matter"

SOURCE: Beijing GAONENG WULI YU HE WULI [PHYSICA ENERGIAE FORTIS ET PHYSICA NUCLEARIS] in Chinese Vol 9, No 2, Mar 85 pp 220-228

TEXT OF ENGLISH ABSTRACT: The complex off-shell single-particle potential in N=Z symmetric nuclear matter is computed with Skyrme interactions. The imaginary parts of the polarization and correlation contributions are calculated analytically and their real parts are obtained by means of dispersion relation. The energy dependence of the effective mass is also studied.

12949
CSO: 4009/243

JPRS-CST-85-025
1 August 1985

AUTHOR: SU Qiang [5685 6973]
LU Yuhua [0712 3768 5478]

ORG: Changchun Institute of Applied Chemistry, Chinese Academy of Sciences

TITLE: "Study of the Crystal Growth, Composition and Some Properties of Dimethylsulphoxide Complexes of Rare Earth Nitrates"

SOURCE: Changchun YINGYONG HUAXUE [CHINESE JOURNAL OF APPLIED CHEMISTRY] in Chinese Vol 2 No 1, Mar 85 pp 1-7

TEXT OF ENGLISH ABSTRACT: All dimethylsulphoxide complexes of rare earth nitrates (except Pm) were synthesized. Large dimensional crystals of La or Nd (60 x 28 x 25 mm or 80 x 28 x 28 mm respectively) were grown. The composition of complexes from La to Gd is $RE(NO_3)_3 \cdot 4DMSO$ and that of those from Tb to Lu (including Y) is $RE(NO_3)_3 \cdot 3DMSO$. Because of steric hindrance caused by lanthanide contraction, the number of the bound DMSO decreased from 4 to 3 and the coordination number decreased from 10 to 9.

Comparing the absorption spectra of Nd^{3+} ions in aqueous solution to those in DMSO solution, the red shift of the spectral bands of the Nd^{3+} ion in DMSO solution has been observed, showing that in the DMSO solution there exists a certain degree of covalency in the RE-O bond.

When the crystals are thermally decomposed in the air at 850°C, the composition of the thermally decomposed products of the trivalent rare earth ions becomes $RE_2O_2SO_4$ (RE = Nd^{3+}, Eu^{3+}, Y^{3+}).

The magnetic susceptibilities X_g of all dimethylsulphoxide complexes of rare earth nitrates have been determined. As the atomic number (Z) of rare earths increases, they change periodically, and there appear two maxima in the plot of X_g vs Z.

The absorption, excitation and fluorescence spectra of $Pr(NO_3)_3 \cdot 4DMSO$ and $Tb(NO_3)_3 \cdot 3DMSO$ were determined.

AUTHOR: ZHANG Siyuan [1728 1835 6678]
WANG Qingyuan [3769 1987 0337]
WU Shixue [2976 1102 1331]
et al.

ORG: Changchun Institute of Applied Chemistry, Chinese Academy of Sciences

TITLE: "Radiative Transitions in SmP_5O_{14} Crystals"

SOURCE: Changchun YINGYONG HUAXUE [CHINESE JOURNAL OF APPLIED CHEMISTRY] in Chinese Vol 2 No 1, Mar 85 pp 24-28

TEXT OF ENGLISH ABSTRACT: In this paper, by using the Judd-Ofelt theory, the oscillator strength parameters Ω_λ and the oscillator strength are calculated. They agree with the experimental values. The reduced matrix elements and radiative transition probabilities of $^4G_{5/2}$-^6H_J transitions are calculated as well.

AUTHOR: RAN Ruicheng [0373 3843 2052]
JIANG Shuojian [5592 4311 0256]
SHEN Ji [3088 0679]

ORG: RAN, JIANG of the Department of Chemistry, Beijing University; SHEN of Beijing Chemical Fiber College

TITLE: "A Lewis Acid Catalyst Supported by Polymer Polystyrene-Titanium Tetrachloride Complex"

SOURCE: Changchun YINGYONG HUAXUE [CHINESE JOURNAL OF APPLIED CHEMISTRY] in Chinese Vol 2 No 1, Mar 85 pp 29-33

TEXT OF ENGLISH ABSTRACT: Polystyrene, cross-linked with 5-7 percent divinylbenzene, is combined with $TiCl_4$ in CS_2 to form a stable complex containing 4.5 percent chlorine. The $TiCl_4$ complexed in the polymer is resistant to water and can be stored in air for at least one year. The Lewis acid complex catalyst can be used to catalyze the conversion of aromatic aldehydes, carboxylic acids, ketones and some alcohols into corresponding acetals, esters, ketals and ethers in high yield. The complex is also effective for the Friedel-Crafts alkylation reaction. For these reactions the title catalyst can be used repeatedly four to five times.

AUTHOR: YU Fusheng [0151 6346 3932]
XU Yang [1776 3152]
ZHANG Qin [1728 3830]

ORG: Changchun Institute of Applied Chemistry, Chinese Academy of Sciences

TITLE: "The Effect of Internal Stress on the Crystallization of Cis-1, 4 Polybutadiene"

SOURCE: Changchun YINGYONG HUAXUE [CHINESE JOURNAL OF APPLIED CHEMISTRY] in Chinese Vol 2 No 1, Mar 85 pp 48-53

TEXT OF ENGLISH ABSTRACT: The isothermal crystallization behavior of cis-1, 4 polybutadiene raw rubber was studied at depressed and elevated temperatures by means of a linear dilatometer. It was found that the length of some gel-containing samples increased at the beginning of crystallization, and decreased until the crystal melted completely. These abnormal phenomena disappeared gradually with the process of annealing of the sample. In this paper a model of the gel-containing sample is proposed which may preserve the internal stress by adding an external force. Due to the internal stress preserved in the sample, the oriented gel parts form a fibrillar crystal at the first stage, which lengthens the sample, then the spherical crystal formed in the sol parts reduces the length of the sample. This interpretation is further confirmed by DSC experiments.

AUTHOR: WANG Yihui [3769 5030 6540]

ORG: Changchun Institute of Applied Chemistry, Chinese Academy of Sciences

TITLE: "The Chemical Forms and Laser Properties of Nd^{3+} Ion in Some Inorganic Solvents"

SOURCE: Changchun YINGYONG HUAXUE [CHINESE JOURNAL OF APPLIED CHEMISTRY] in Chinese Vol 2 No 1, Mar 85 pp 54-59

TEXT OF ENGLISH ABSTRACT: Some liquid laser solutions containing Nd^{3+} ions were prepared in inorganic solvents. It was found that the composition and proportion of the solvents in the solution asserted an influence on the viscosity, lifetime of $^4F_{3/2}$ energy level for the Nd^{3+} ion and output of laser energy. The high stability of the Nd^{3+} complex and the long lifetime of the energy level for the Nd^{3+} ion are considered to be caused by three factors: the first coordinated sphere for the Nd^{3+} ion is occupied by oxygen atoms, the solvation of the Nd^{3+}-containing complexes with $POCl_3$ molecules and the formation of $>P{=}O{\rightarrow}SnCl_4$ (donor acceptor) bonding.

AUTHOR: HE Tianbai [0149 1131 4101]
ZHANG Wanxi [1728 8001 0823]
SUN Jiazhen [1327 1367 3791]

ORG: Changchun Institute of Applied Chemistry, Chinese Academy of Sciences

TITLE: "Effect of Chain Structure on the Radiation Behavior of 1,2-Polybutadienes"

SOURCE: Changchun YINGYONG HUAXUE [CHINESE JOURNAL OF APPLIED CHEMISTRY] in Chinese Vol 2 No 1, Mar 85 pp 64-66

TEXT OF ENGLISH ABSTRACT: In this paper the relationship of the degree of degradation of γ-irradiated 1,2-polybutadienes with various 1,2-unit contents to the radiation dose is studied. It is found that the sol fraction of the cross-linked samples is proportional to the β power of the radiation dose, and the lower the 1,2-unit content, the smaller the β value is. Since the molecular chain of 1,2-polybutadiene with lower 1,2-unit content is more flexible than that with a higher content, the radiation behavior of 1,2-polybutadienes relates to their chain flexibility. It is proposed that structural parameters of polymers, such as cohesion energy density and cross-sectional area of the polymer chain, be used to relate to the parameter β, that is, to the effect of the polymer structure on radiation behavior.

9717
CSO: 4009/1047

JPRS-CST-85-025
1 August 1985

AUTHOR: HE Binglin [0149 3521 2651]
YU Yansheng [0060 3601 3932]
SONG Fuyun [1345 4395 0061]
et al.

ORG: Department of Chemistry, Nankai University, Tianjin

TITLE: "Investigation of a New Type of Adsorbent--Spherical Carbonaceous Adsorbent (IV)"

SOURCE: Beijing GAOFENZI TONGXUN [POLYMER COMMUNICATIONS] in Chinese No 2, Apr 85 pp 100-104

TEXT OF ENGLISH ABSTRACT: Beads of a low crosslinking acrylonitrile polymer were first heated in the presence of oxygen and then pyrolyzed under a nitrogen atmosphere in a cracking furnace. The spherical carbonaceous adsorbent thus obtained had a diameter of 0.4-0.6 mm. The physical properties of the carbonaceous beads were measured. The surface area of the beads was near 600 m^2/g and the distribution of pore diameters was 800-40,000 Å. The adsorption of creatinine, uric acid and vitamin B_{12} each was over 98 percent.

When the pyrolysis temperature for adsorbents was over 650°C, the spherical carbonaceous adsorbents, whether activated or inactivated, had good adsorption for creatinine and uric acid.

AUTHOR: LI Yuliang [2621 3768 5328]
PANG Shufen [6614 2631 5358]
XUE Dawei [5641 1129 0251]
et al.

ORG: Changchun Institute of Applied Chemistry, Chinese Academy of Sciences, Changchun

TITLE: "Research on Polymer-Supported Rare Earth Metal Complexes. II. The Stereospecific Polymerization of Butadiene with the Catalytic System of Polymer-Supported Neodymium Complex"

SOURCE: Beijing GAOFENZI TONGXUN [POLYMER COMMUNICATIONS] in Chinese No 2, Apr 85 pp 111-117

TEXT OF ENGLISH ABSTRACT: A new catalyst system composed of a neodymium complex supported on styrene-acrylic acid copolymer (SAAC) SAAC·Nd-$Al(C_2H_5)_2Cl$-$Al(i\text{-}C_4H_9)_3$ for the stereospecific polymerization of butadiene is described. The effects of the components, the component ratio and the different alkylaluminum halides, as well as alkylaluminums and the characterization parameters of polymer-supported neodymium complex on its activity have been studied. Results show that the system possesses good activity and high stereospecificity, giving pol polybutadiene with 98 percent cis-1, 4 content.

AUTHOR: WU Baozhu [0702 1032 6899]
LU Meili [7627 3780 7787]
ZHU Zhenhao [2612 2182 6275]

ORG: Shanghai Institute of Organic Chemistry, Chinese Academy of Sciences

TITLE: "Study on Thermal Stimulated Current of Vinylidenefluoride-Tetrafluoroethylene Copolymers"

SOURCE: Beijing GAOFENZI TONGXUN [POLYMER COMMUNICATIONS] in Chinese No 2, Apr 85 pp 141-144

TEXT OF ENGLISH ABSTRACT: The pyroelectric behavior of VDH-TFE copolymers, botained by using different initiators, was compared. The effects of corona polarization on the pyroelectricity were also investigated. Two current peaks were obtained in the TSC curve from the corona discharge sample. The first peak in the TSC curve was found to be mainly attributed to the depolarization current of the space charge.

AUTHOR: LU Fengcai [4151 7685 2088]
WANG Yulan [3769 3768 5695]
WANG Dianxun [3769 3013 8113]
et al.

ORG: Institute of Chemistry, Chinese Academy of Sciences

TITLE: "Study of Polyphenylquinoxaline-Platinum and Rhodium Complexes"

SOURCE: Beijing GAOFENZI TONGXUN [POLYMER COMMUNICATIONS] in Chinese No 2, Apr 85 pp 154-156

TEXT OF ENGLISH ABSTRACT: Two new polyphenylquinoxaline-platinum and rhodium complexes identified by X-ray photoelectron spectroscopy were synthesized. Their catalytic properties on hydrosilylation and hydrogenation of unsaturated compounds have been investigated. It was found that these polymer complexes possess high catalytic activities and can be easily recovered after each reaction. They can also be used repeatedly several times while maintaining the same effectiveness.

AUTHOR: HU Shiru [5170 0013 1172]
XU Mao [1776 2021]

ORG: Institute of Chemistry, Chinese Academy of Sciences

TITLE: "Optical Evaluation of Orientation of Uniaxially and Biaxially Stretched PET Films"

SOURCE: Beijing GAOFENZI TONGXUN [POLYMER COMMUNICATIONS] in Chinese No 2, Apr 85 pp 157-160

TEXT OF ENGLISH ABSTRACT: The influence of the strain rate on three-dimensional orientation of polyethylene terephthalate (PET) films has been studied by means of refractometry in the case of uniaxial and biaxial (including simultaneous and sequential) stretchings.

Two birefringence values, $\Delta_{XY} = n_X - n_Y$ and $\Delta_{(XY)Z} = (n_X + n_Y)/2 - n_Z$ (where the Z axis is perpendicular to the film plane and X and Y are axes within the film plane), are suggested to evaluate the orientation of film specimens. It is shown that the uniaxial stretching mainly results in anisotropy within the film plane, while the biaxial stretching technique is conducive to improving the degree of planar orientation in the films.

9717
CSO: 4009/1048

AUTHOR: JING Cailiu [4842 2088 7511]
DING Linkai [0002 2651 1052]
ZHU Qingqi [2612 3237 2759]
et al.

ORG: Institute of High Energy Physics, Academia Sinica

TITLE: "Analysis of Cosmic Ray Multi-u Phenomena in Energy Region 10^{14}--10^{16} e V"

SOURCE: Beijing GAONENG WULI YU HE WULI [PHYSICA ENERGIAE FORTIS ET PHYSICA NUCLEARIS] in Chinese Vol 9, No 2, Mar 85 pp 134-141

TEXT OF ENGLISH ABSTRACT: Under the condition of the primary cosmic ray incidence with different composition, the multi-μ phenomena are simulated by the scaling model of the hadronic interactions included in the mechanism of jet production with large transverse mementum. The results show that the primary heavy nuclei contribute significantly to the large μ-multiplicity events observed at deep underground. But even the heavy nucleus dominant primary model is used, the multi-μ event rate simulated is still lower than the experimental data and it suggests the existence of other multi-μ sources. The lateral distribution of multi-u events is in accordance with the experiments.

12949
CSO: 4009/243

JPRS-CST-85-025
1 August 1985

AUTHOR: SHI Jiawei [4258 1367 4885]
JIN Enshun [6855 1869 7311]

ORG: Department of Electronic Science, Jilin University

TITLE: "Electrical Derivative Characteristics of InGaAsP/InP Oxide Stripe Heterostructure Lasers"

SOURCE: Jilin JILIN DAXUE ZIRAN KEXUE XUEBAO [ACTA SCIENTIARUM NATURALIUM UNIVERSITATIS JILINENSIS] in Chinese No 2, 28 May 85 pp 60-64

TEXT OF ENGLISH ABSTRACT: Results of measurements of the electrical derivative characteristics of InGaAsP/InP oxide stripe heterostructure lasers are presented. Similar measurements were made of lasers being connected in parallel with linear or nonlinear resistance and the results are given. By considering current-leakage paths, an equivalent circuit model appropriate to the oxide stripe heterostructure laser has been used. Results of measurements and computation are compared and analyzed. Multi-sink, size of sinkstep, size and scale of peak, etc., are discussed. Results show that the combination of techniques of electrical-derivative measurement and equivalent-circuit modeling for understanding the properties and measuring some parameters is useful.

AUTHOR: JIN Xizhuo [6855 1585 0587]
LIU Mingdeng [0491 2494 4098]
GENG Huanzhen [5105 3562 3791]

ORG: JIN and LIU of Jilin University, Changchun; GENG of Beijing Dongguang Factory of Electrical Engineering, Beijing

TITLE: "Velocity Profile and Mass Transport in a Rectangular Reactor"

SOURCE: Jilin JILIN DAXUE ZIRAN KEXUE XUEBAO [ACTA SCIENTIARUM NATURALIUM UNIVERSITATIS JILINENSIS] in Chinese No 2, 20 May 85 pp 72-80

TEXT OF ENGLISH ABSTRACT: In this paper the velocity profile and mass transport in a rectangular reactor for the epitaxial growth of Si from $SiCl_4$ in H_2 by CVD are studied. We extend Andrew's results of the horizontal susceptor to the small tilted angle susceptor. We also introduce a correct factor of the mass transport coefficient to evaluate the growth rate of silicon along the tiled susceptor. Our results are in agreement with the experimental results.

AUTHOR: WANG Yi [3769 3015]

ORG: Department of Mathematics, Jilin University

TITLE: "A Plasma Self-consistent Potential Problem"

SOURCE: Jilin JILIN DAXUE ZIRAN KEXUE XUEBAO [ACTA SCIENTIARUM NATURALIUM UNIVERSITATIS JILINENSIS] in Chinese No 2, 20 May 85 pp 81-89

TEXT OF ENGLISH ABSTRACT: In this paper we prove the existence and uniqueness of the singular boundary value problems:

$$\begin{cases} y'' + \frac{a(x)}{x}y' = f(x, y) \\ y'(0) = 0 \quad y(1) = y_0 \end{cases} \quad \text{and} \quad \begin{cases} y'' + \frac{a(x)}{x}y' = f(x, y) \\ |y(0)| < M \quad y(1) = y_0 \end{cases}$$

containing self-consistent potential problems in cylindrical and spherical symmetrical plasmas.

9717
CSO: 4009/2003

JPRS-CST-85-025
1 August 1985

AUTHOR: NIU Xiye [3662 0823 2814
LIU Shufen [0491 3219 5358]

ORG: Both of Institute of Environmental Chemistry, Chinese Academy of Sciences

TITLE: "Distribution of Organophosphorous Pesticide Residues in Sewage Stream Discharged From Hunan Pesticide Factory"

SOURCE: Beijing HUANJING KEXUE [JOURNAL OF ENVIRONMENTAL SCIENCE] in Chinese No 2, 30 Apr 85 pp 45-49

ABSTRACT: The Hunan Pesticide Factory is a major plant producing organophosphorous pesticides. The basically untreated sewage of 10,000 m^3 per day empties into a 3-km long sewage stream, flowing into the Xiang River as one of the major pollution sources since the plant was built in the mid-1950s and several subsequent expansions. This study was consigned by the Hunan Provincial Department of Environmental Protection for Urban and Rural Construction, and assisted by the Hunan Provincial Institute of Environmental Protection. Specimens were collected from water of the sewage stream, stream-bed mud, and water of the Xiang River. A study was conducted on the residue distribution of organophosphorous pesticides in the sewage system and its effect on water quality in the Xiang River. Based on the factory report of average daily sewage discharge into the stream, preliminary estimates were made of the discharged amounts of organophosphorous pesticides and those into the Xiang River, as well as the amount of evaporation and degradation during the flow into the river. These data are useful for the sewage treatment of the pesticide factory and pollution control of the Xiang River. Two figures show the specimen collection sites and the section of Xiang River affected. Five tables list the residue distributions or organophosphorous pesticides in the sewage-stream water and the stream-bed mud, and in the Xiang River water, as well as the amounts of organophosphorous pesticides discharged into the sewage stream and the Xiang River by the factory.

10424
CSO: 4009/2004

JPRS-CST-85-025
1 August 1985

AUTHOR: SUN Zhijian [1327 1807 1017]
TANG Jihu [0781 1323 5706]
HUANG Xianghu [7806 3276 5706]
TONG Mingqing [4547 2494 1987]
WANG Meijuan [3076 5019 1227]
LI Huiping [2621 1920 5493]
SHEN Hua [1327 5478]
CHEN Zhongying [7115 6945 5391]
YANG Qiming [2799 3825 2494]
CHEN Se [7115 4484]
DAI Guoqi [2071 0948 3825]

ORG: SUN, TANG, HUANG, TONG, WANG, LI, SHEN and CHEN Zhongying of First Hospital of Nanjing Medical College; YANG and CHEN Se of Danyang County People's Hospital; DAI of Jintan County People's Hospital

TITLE: "Clinical Study on Use of Propranolol in Treating Epidemic Hemorrhagic Fever"

SOURCE: Beijing ZHONGHUA YIXUE ZAZHI [NATIONAL MEDICAL JOURNAL OF CHINA] in Chinese No 4, 15 Apr 85 pp 225-228

ABSTRACT: The authors investigate the therapeutic effect and regime of propranolol treatment of epidemic hemorrhagic fever. The study results based on 82 cases reveal that propranolol has an apparent therapeutic effect in relieving the sickness and kidney damage, as well as lowering the case fatality rate. The severity of the sickness is related (to some extent) to the AT-II level in the blood plasma; BUN and AT-II in the blood plasma are apparently correlated. In the treatment group, the AT-II level in the blood plasma from the fever period to the uropenia period is lower than for the control group. It is suggested that the increase in the AT-II level in the blood plasma may be a major factor causing kidney damage. Propranolol can inhibit the secretion of nephrolysine and lower the AT-II level in the blood plasma. Two figures show variations in the AT-II level during various tests and between the treatment group and the control group. Three tables list variations in the AT-II level in mild and severe cases, as well as comparisons between treatment group and control group with respect to kidney damage and the course of sickness. The first draft of the paper was received on 23 June 1983; the final, revised draft was received for publication on 28 December 1984.

10424
CSO: 4009/259

AUTHOR: WANG Dehou [3769 1779 0624]
LAN Zhijin [5663 1807 6855]
HAN Houzhe [7281 0624 0772]
WANG Yuming [3769 3768 2494]

ORG: Both WANGs are of Hospital No 223, Chinese People's Liberation Army; LAN of Changchun Biological Products Institute, Ministry of Public Health; HAN of Yanibian Medical College

TITLE: "Study on Propranolol in Treating Epidemic Hemorrhagic Fever With Adsorptive Blood Perfusion"

SOURCE: Beijing ZHONGHUA YIXUE ZAZHI [NATIONAL MEDICAL JOURNAL OF CHINA] in Chinese No 4, 15 Apr 85 pp 229-231

ABSTRACT: Treatment of nine cases of epidemic hemorrhagic fever with adsorptive blood perfusion was conducted with a certain therapeutic effect. In order to understand the epidemic regime, experimental observations were made on using an activated carbon adsorbent to clear up the circulation immunocomplexes. As proved preliminarily, blood perfusion can be used to clear up immunocomplexes in the blood of patients with epidemic hemorrhagic fever. The clearing effect of activated carbon adsorbent is directly related to the blood flow volume. Adsorption is less than saturation for low blood flow; the clearing effect is poor in this case. The adsorbent is over-saturated in the case of high blood flow; further adsorption will cease. More studies are required for appropriate blood flow values, perfusion times and duration. Two tables show treatment of nine cases of epidemic hemorrhagic fever, and the complexation percentage of C_{1q}.

10424
CSO: 4009/259

JPRS-CST-85-025
1 August 1985

AUTHOR: ZHU Jian [4376 0256]

ORG: Staff Member's Hospital, Changfeng Chemical Plant, Changqing

TITLE: "Acute Phosgene Poisoning: Observation of Therapeutic Effect in 156 Cases"

SOURCE: Beijing ZHONGHUA NEIKE ZAZHI [CHINESE JOURNAL OF INTERNAL MEDICINE] in Chinese No 4, 1985 pp 224-226, 255

TEXT OF ENGLISH ABSTRACT: The author reports his experience in the treatment of acute phosgene poisoning. Altogether there were 156 patients intoxicated (35 of them with pulmonary edema complications), all of whom were treated with a combination of druge including glucocorticoid, dimethiconl aerosol, anisodamine, etc., with very successful results. All the patients survived the intoxication and no sequela were found during a follow-up period of from one to nine years. Regular chest X-rays were taken for the 35 cases complicated with pulmonary edema, and the therapeutic method mentioned above was effective for these patients also.

9717
CSO: 4009/2001

JPRS-CST-85-025
1 August 1985

AUTHOR: LAI Kuangdai [0171 0562 6649]
MAN Hongsheng [3341 3163 0581]
DONG Guobin [5516 0948 6333]

ORG: Zunyi Medical College, Zunyi

TITLE: "A Gas Chromatographic Method for Analysis of Fatty Acids and Alcohols Produced by Anaerobic Bacilli"

SOURCE: Beijing ZHONGHUA WEISHENGWUXUE HE MIANYIXUE ZAZHI [CHINESE JOURNAL OF MICROBIOLOGY AND IMMUNOLOGY] in Chinese No 1, Feb 85 pp 41-44

TEXT OF ENGLISH ABSTRACT: The use of gas chromatography for the analysis of bacterial fatty acid and alcohol metabolites is critical for the identification of many anaerobes. Using a model SP-2305 gas chromatograph, the authors analyzed the fatty acids and alcohols produced by 12 species of anaerobic bacilli grown in a chopped meat-glucose medium, with a hydrogen flame ionization detector. The procedure is simple, sensitive and the results are highly reproducible.

AUTHOR: ZHU Zhiyong [2612 2535 0516]
TANG Hanying [0781 3352 5391]
FU Guiming [0102 2710 2494]
et al.

ORG: Zhejiang Health and Anti-epidemic Station, Hangzhou

TITLE: "Study of Inapparent Infection in Rabbits for Epidemic Hemorrhagic Fever Virus"

SOURCE: Beijing ZHONGHUA WEISHENGWUXUE HE MIANYIXUE ZAZHI [CHINESE JOURNAL OF MICROBIOLOGY AND IMMUNOLOGY] in Chinese No 1, Feb 85 pp 49-52

TEXT OF ENGLISH ABSTRACT: This study confirms the fact that the rabbit is a laboratory animal susceptible to EHFV strains isolated from both wild rodents and patients with EHF, but shows no overt disease. Specific fluorescence for EHFV antigen was detected in many tissues, especially in the spleen, small intestine and pancreas on the 7th-13th days of experimental infection. EHFV strains were serially passaged in the rabbits. EHFV could be easily isolated by using the rabbit as well as Apodemus agrarius from FA positive lungs of wild rodents. Viremia was detected in the rabbits on the 4th-6th days after EHFV inoculation. Therefore, the rabbit is a new animal model for isolation and propagation of EHFV and may be useful for vaccine preparation and drug screening.

AUTHOR: WU Zhangqi [0702 4545 4860]
CHEN Yali [7115 7161 7787]
JIAN Haoran [4675 3185 3544]

ORG: Wuhan Institute of Virology, Chinese Academy of Sciences, Wuhan

TITLE: "Studies on Factors Affecting the Production of Non-infectious Hemagglutinating Particles of Newcastle Disease Virus"

SOURCE: Beijing ZHONGHUA WEISHENGWUXUE HE MIANYIXUE ZAZHI [CHINESE JOURNAL OF MICROBIOLOGY AND IMMUNOLOGY] in Chinese No 1, Feb 85 pp 55-58

TEXT OF ENGLISH ABSTRACT: The best condition for obtaining non-infectious hemagglutinin particles from an avirulent strain of Newcastle Disease Virus was found to be passage in an 11-day-old chicken embryo for 13-15 times incubated at 37°C for 48 hours for each passage. In addition, it was found that the passage should be made with diluted allantoic fluid. Also, it was found that the non-infectious particles of the virulent strains are better than those of avirulent ones for the production of non-infectious hemagglutinin particles and cultivation in chicken embryos is better than in a tissue culture medium.

9717
CSO: 4009/2005

JPRS-CST-85-025
1 August 1985

AUTHOR: ZHANG Jiahong [1728 8026 5725]
WANG Binghu [3769 4426 3275]
XU Tingbao [6079 1694 1405]

ORG: Institute of Atomic Energy, Chinese Academy of Sciences

TITLE: "Data Communication System in Nuclear Data Acquisition System Based on Computer"

SOURCE: Beijing HEDIANZIXUE YU TANCE JISHU [NUCLEAR ELECTRONICS AND DETECTION TECHNOLOGY] in Chinese Vol 5 No 2, Mar 85 pp 65-68, 77

TEXT OF ENGLISH ABSTRACT: This paper introduces a high rate data communication system. This system is designed based on a computer multi-user nuclear spectrum data acquiring and processing system which we developed. It also describes how to use this computer system as a data acquiring and processing apparatus for distant laboratories. The maximum data rate handled by each channel can be up to 1 Mbit/s. The form of the information obtained is approximately the same as that provided by CAMAC.

AUTHOR: DU Lancun [2629 5695 1317]
ZHANG Yujiang [1728 3768 3068]

ORG: Beijing Nuclear Instrument Factory

TITLE: "End Window γ-Ray and X-Ray Proportional Counter for Low Energy"

SOURCE: Beijing HEDIANZIXUE YU TANCE JISHU [NUCLEAR ELECTRONICS AND DETECTION TECHNOLOGY] in Chinese Vol 5 No 2, Mar 85 pp 69-72, 84

TEXT OF ENGLISH ABSTRACT: The structural tests, structural characteristics and improvements of the end effects of three types of end window proportional counters are described in this paper. The energy linearity and relative detection efficiency of these counters are also discussed. A performance list is given at the end of the paper.

AUTHOR: FAN Qinmin [5400 2953 2404]
CHAI Zhifang [2693 0037 5364]
LI Xiuxia [2621 1485 7209]
et al.

ORG: Institute of High Energy Physics, Chinese Academy of Sciences

TITLE: "Semiempirical Efficiency Calibration of Large-Volume Coaxial Ge(Li) Detector"

SOURCE: Beijing HEDIANZIXUE YU TANCE JISHU [NUCLEAR ELECTRONICS AND DETECTION TECHNOLOGY] in Chinese Vol 5 No 2, Mar 85 pp 73-77

TEXT OF ENGLISH ABSTRACT: The full-energy peak absolute efficiency of a 136 cm^3 coaxial Ge(Li) detector is determined at different energy levels. Due to the introduction of the efficient interaction depth (e.i.d.), the absolute efficiency can get its nonlinearity leastsquare fitting by means of semiempirical parameters. The fitting value is coincident with empirical values.

AUTHOR: LU Dezhi [0712 1795 2535]
YU Chuansong [0060 0278 2646]

ORG: None

TITLE: "Type U Crate Controller"

SOURCE: Beijing HEDIANZIXUE YU TANCE JISHU [NUCLEAR ELECTRONICS AND DETECTION TECHNOLOGY] in Chinese Vol 5 No 2, Mar 85 pp 78-84

TEXT OF ENGLISH ABSTRACT: In this article we introduce a standard interface between the popular 8-bit microcomputer and the CAMAC system type U CAMAC crate controller. We compare the strong and weak points of the memory addressing mode configuration and the I/O addressing mode configuration, and describe some technical problems and details.

AUTHOR: YU Chen [0060 1368]
ZHANG Shuhua [1728 3219 5478]
XU Hongye [6079 1347 2814]
et al.

ORG: Institute of Atomic Energy, Chinese Academy of Sciences

TITLE: "A Two-dimensional Imaging Focal Plane Detector"

SOURCE: Beijing HEDIANZIXUE YU TANCE JISHU [NUCLEAR ELECTRONICS AND DETECTION TECHNOLOGY] in Chinese Vol 5 No 2, Mar 85 pp 85-91

TEXT OF ENGLISH ABSTRACT: This paper describes the structure and gas-flow system, electrical circuit and performance of the imaging focal plane detector for the type Q3D spectrograph. The detector is a MWPC with an active area of 176 x 76 mm^2, working at low pressure. The position readout uses a tapped delay line and an indirect coupled delay line separately in the directions of the x and y axes. For vertical incident α particle with energy 5.3 MeV, the horizontal resolution is 0.5-1.0 mm and the vertical resolution is 0.75-0.85 mm. The model plate and the α beam image are also given in this paper.

9717
CSO: 4009/258

JPRS-CST-85-025
1 August 1985

AUTHOR: CHEN Guogen [7115 0948 2704]
XIAO Weibing [5618 5898 0365]

ORG: Both of Navy Research Institute of Medical Sciences, Shanghai

TITLE: "Study on Pulmonary Functions in Simulated 200-Meter Undersea Diving Training in Saturated Helium-Oxygen Environment"

SOURCE: Beijing HAIYANG XUEBAO [ACTA OCEANOLOGICA SINICA] in Chinese No 3, 15 May 85 pp 388-394

ABSTRACT: This paper reports on pulmonary functions and pulmonary tachograms in tests of four divers staying for 53 hours in high helium-oxygen pressure in a 200-meter undersea simulated environment and during the decompression process. (1) During the stay at high gas pressures simulating a 200-meter undersea depth, the $FEV_{1.0}$, $FEV_{1.0\%}$, $MMFR_{25-75\%}$ and MVV decrease significantly; these figures gradually increase during the decompression period. All these figures return to the control level 5 hours after the end of decompression. (2) During the stay in the simulated environment as in (1), the lung tachogram reveals that the blood flow supply in pulmonary circulation is 35 percent higher than the control group in normal atmospheric pressure. The time required to flow into the lesser circulation is 39.7 percent shorter than for the control group at normal atmospheric pressure. (3) The exhalation flow versus lung capacity curve and the CV test show no statistical differences before the gas compression and after the end of decompression.

From the above-mentioned results, diving training simulating the 200-meter undersea depth in a saturated helium-oxygen environment is basically feasible as evaluated from the standpoint of lung functions. However, during decompression to a simulated undersea depth of 80 meters, the FVC of a diver decreased slightly (8.1 percent). Although there were no subjective symptoms of lung-type oxygen poisoning, yet X-ray photography of the diver's lungs displayed significant increases in lung-markings. The clinical significance of this phenomenon should be noticed. Two tables list measurements of divers' pulmonary functions and variation of various parameters and the exhalation flow versus lung capacity curves. Three figures show the pulmonary tachogram tests, data on pulmonary functions, and five parameters of the pulmonary blood stream. The paper was received for publication on 29 December 1983.

10424
CSO: 4009/257

AUTHOR: HU Zhengyuan [5170 2973 0337]
LIANG Zhenfu [2733 2182 4395]
SHI Xiufeng [0670 4423 7685]

ORG: All of Navy Research Institute of Medical Sciences, Shanghai

TITLE: "Study on Divers' Auditory Functions Affected During Diving Training in Saturated Helium-Oxygen Gas Mixture in a Simulated 200-Meter Undersea Pressure"

SOURCE: Beijing HAIYANG XUEBAO [ACTA OCEANOLOGICA SINICA] in Chinese No 3, 15 May 85 pp 395-398

ABSTRACT: The paper reports changes in the auditory functions of four divers before and after diving training in a saturated helium-oxygen gas mixture. The hearing determination revealed that generally the shift of the auditory threshold does not exceed 5dB. In only two divers (No 1 and No 2) is the maximum shift of the auditory threshold between 7.5 and 10 dB. From a determination of auditory fatigue, in two divers (No 1 and No 4) the increase of the auditory threshold (following stimulation with a 3000 Hz tone) is 5 dB over the value before entering the pressurized cabin of the simulated environment. This result reveals that a mild degree of fatigue still exists in the hearing organ although the change in hearing ability was minor. After the divers left the undersea simulation test cabin, the pressure in the middle-ear cavity increased to positive values. The movement function of the tympanic membrane and chain of hearing bones increased significantly. In all divers, the reflection threshold value of musculus stapedius slightly decreased after leaving the pressurized cabin. The test results reveal that the divers' auditory functions do not exhibit adverse effects from the variation in noise and pressure in the test cabin. The paper was received for publication on 29 December 1983.

10424
CSO: 4009/257

AUTHOR: XU Lilun [1776 4539 6158]

ORG: Department of Marine Physics and Marine Meterology, Shandong Oceanography College, Qingdao

TITLE: "Statistical Distribution of Wave Heights of Sea Wave Groups"

SOURCE: Beijing HAIYANG XUEBAO [ACTA OCEANOLOGICA SINICA] in Chinese No 3, 15 May 85 pp 280-287

ABSTRACT: Based on the statistical theory of wave group envelope proposed by Rice and Longuet-Higgins, the paper derives the maximum values of the wave group envelope and the statistical distribution of wave heights of a wave group. Only by calculating the sea wave spectrum and various orders of moment, can the wave heights of a wave group be obtained from sea wave heights. The paper uses a calculation of the interrupted Pierson-Maskowitz (P-W) spectrum to derive the theoretical distribution curves for a comparison between data obtained from the sea and from the laboratory. Eight figures show a definition of a wave group, calculation of probability density distributions of maximum values of wave group envelope and wave heights of a wave group calculated with the interrupted P-M spectrum, variations of different coefficients with spectrum width, and a comparison of calculations between survey data and theoretical results. The author thanks Professor Holmes of London Imperial Science and Engineering College for suggestions, Dr K. Anastasion and Mr J. Wilkinson for assistance on the computer program and for providing laboratory data, and associate professor Yu Shenwen [0151 1399 2429] in assisting in revising the paper. The first draft of the paper was received on 19 October 1983; the final, revised draft was received for publication on 4 August 1984.

10424
CSO: 4009/257

AUTHOR: GONG Jinhan [7895 6930 3211]
WANG Hengxing [3769 1854 2502]
TANG Ruqing [0781 0320 3237]
FAN Shuanghui [2868 7175 2585]
YANG Shufu [2799 2579 4395]

ORG: GONG, WANG and TANG of Navy Research Institute of Medical Sciences, Shanghai; FAN of the Fourth Navy Experimental Region; and YANG of No. 411 Navy Hospital

TITLE: "Medical Safeguard for 53 Hour-long Simulated 200-Meter Depth Underwater Diving in Saturated Helium-Oxygen Environment"

SOURCE: Beijing HAIYANG XUEBAO [ACTA OCEANOLOGICA SINICA] in Chinese No 3, 15 May 85 pp 353-360

ABSTRACT: The paper presents technical data for a series of variations in physiological functions for four divers with 53 hours of exposure at 21 ata and respiration of a saturated helium-oxygen mixture in a simulation of the diving environment. The medical safeguard was practiced successfully through a series of technical measures. The accumulated data provide a background in understanding and assessing the organism's variability of different stages of physiological functions at high gas pressures, as well as its (the organism's) adaptation, work capability, conditions of nutrition and sanitation, safety in increased and decreased gas-pressure conditions, and the effectiveness in guaranteeing safety of medical treatment. The simulation test is useful in the medical safeguard for undersea diving. The persons responsible for various indexes on techniques in this experiment are Chen Yang [7115 7122], Pan Lingsong [3382 0109 2646], Zhang Hengdu [4545 1854 4648], Chen Guogen [7115 0948 2704], Zhang Mingfang [1728 2494 5364], Cheng Zhenqiu [4453 2182 3808], Zhang Shulan [1728 3219 5695], Hu Zhengyuan [5170 2973 0337], Xiao Weibing [5618 5898 0365], Liu Shili [0491 1684 7230], Lin Sizhong [2651 0843 1813], Liu Guangqing [0491 1684 7230], Zhu Xieliang [2612 3610 5328], and Luan Yinbao [2940 0603 1405]. The paper was received for publication on 29 December 1983.

10424
CSO: 4009/257

AUTHOR: YU Hongxuan [0060 7703 3872]
Rudolf Neumann

ORG: YU of the Institute of High Energy Physics, Academia Sinica and NEUMANN of Deutches Elektronen-Synchrotron DESY, Hamburg

TITLE: "A Real-time Picture Memory"

SOURCE: Beijing GAONENG WULI YU HE WULI [PHYSICA ENERGIAE FORTIS ET PHYSICA NUCLEARIS] in Chinese Vol 9, No 1, Jan 85 pp 12-18

TEXT OF ENGLISH ABSTRACT: A cheap real-time picture memory used for matching TV camera and TV monitor is described. The structure is very simple. It is able to do real-time accessing of video pictures, and 256x256 picture elements with 4 bits of gray levels are used. The width of the picture element is within 180 ns.

12949
CSO: 4009/269

AUTHOR: MA Jimao [7456 1015 5399]
MAO Zepu [3029 3419 2528]
ZHOU Jie [0719 2638]
et al

ORG: Institute of High Energy Physics

TITLE: "A Drift Chamber With Uniform Electrical Field and Measurements of the Electron Drift Velocity"

SOURCE: Beijing GAONENG WULI YU HE WULI [PHYSICA ENERGIAE FORTIS ET PHYSICA NUCLEARIS] in Chinese Vol 9, No 1, Jan 85 pp 1-5

TEXT OF ENGLISH ABSTRACT: The measurements of the electron drift velocity as a function of the electrical field for Ar/CH_4, $Ar/i\text{-}C_4H_{10}$, Ar/CO_2 and SQS gas mixtures. The values of the electrical field range from about 0.3 to 2.5 kV/cm. The results of the measurements are discussed.

12949
CSO: 4009/269

AUTHOR: FAN Hongyi [5400 3163 5030]
YUAN Tunan [7086 0956 0589]

ORG: University of Science and Technology of China

TITLE: "Some Applications of Coherent State Formulation of the Wigner Operator"

SOURCE: Beijing GAONENG WULI YU HE WULI [PHYSICA ENERGIAE FORTIS ET PHYSICA NUCLEARIS] in Chinese Vol 9, No 1, Jan 85 pp 19-33

TEXT OF ENGLISH ABSTRACT: In this paper both the normal product form and the coherent state form of the Wigner operator are derived. Furthermore, the applications of the new forms of the Wigner operator are also presented, which are involved in deriving some new quantum operator formulae, in the coherent state generalization of the Moyal theorem, and in evaluating some quantum operators which corresponds to the given classical functions in the Weyl manner and vice versa.

12949
CSO: 4009/269

AUTHOR: WU Chongshi [0702 1504 6107]
ZENG Jinyan [2582 6210 6056]

ORG: Department of Physics, Beijing University

TITLE: "Collective Excitation Spectra in Even-even Deformed Nuclei III--Various Expansions of Excitation Energy of Ground Band"

SOURCE: Beijing GAONENG WULI YU HE WULI [PHYSICA ENERGIAE FORTIS ET PHYSICA NUCLEARIS] in Chinese Vol 9, No 1, Jan 85 pp 77-88

TEXT OF ENGLISH ABSTRACT:

The expansions of the excitation energy of the ground band in even-even deformed nucleus are discussed in the framework of our expression deduced in the previous papers. The conventional $I(I + 1)$-expansion which is applicable to the region of low angular momenta is obtained and its radius of convergence is estimated. It can be proved that the ω_I-expansion is always convergent and hence the empirical fact that the ω_I-expansion converges better than the $I(I + 1)$-expansion is explained satisfactorily.

12949
CSO: 4009/269

AUTHOR: XIE Xianliang [6200 6343 0081]
KONG Xiangjing [1313 4382 0311]
SUN Chongwen [1327 6850 2429]
et al

ORG: Institute of Nucleus, Shanghai Academia Sinica

TITLE: "Quasi-free α-α Scattering in ^{12}C at 31.2MeV"

SOURCE: Beijing GAONENG WULI YU HE WULI [PHYSICA ENERGIAE FORTIS ET PHYSICA NUCLEARIS] in Chinese Vol 9, No 1, Jan 85 pp 89-94

TEXT OF ENGLISH ABSTRCT:

The summed energy spectra and the angular correlation for two alpha particles from the $^{12}C(\alpha, 2\alpha)\,^{8}Be$ reaction were measured.

The data show that the quasi-free scattering of incident alpha particle from the alpha cluster in ^{12}C is probably the main mechanism of the reaction on ^{12}C. The data are analyzed by means of PWIA. The probability of forming cluster is 0.07 which is close to the result obtained by James at high incident energy.

12949
CSO: 4009/269

AUTHOR: XIE Yuanxiang [6200 0337 4382]
WU Guohua [0702 0948 5478]
ZHU Yongtai [6175 3057 3141]
et al

ORG: Institute of Modern Physics, Academia Sinica, Lanzhou

TITLE: "Measurement and Analysis of Emitted α Particles in Reactions of ^{12}C Bombarding ^{12}C, ^{27}Al and ^{nat}Ca"

SOURCE: Beijing GAONENG WULI YU HE WULI [PHYSICA ENERGIAE FORTIS ET PHYSICA NUCLEARIS] in Chinese Vol 9, No 1, Jan 85 pp 71-76

TEXT OF ENGLISH ABSTRACT:

The energy spectra and angular distributions of the emitted α particles in the reactions of the 69.5 MeV ^{12}C bombarding ^{12}C, ^{27}Al and ^{nat}Ca have been measured and analysed using the fast particle exciton model. The contribution from the equilibrium and preequilibrium α-emissions is calculated to be 89%, 81% and 83% of the total α yields for the three reactions respectively, where the preequilibrium α emissions are 11%, 14% and 16% respectively. A small contribution comes from the other reaction mechanism.

12949
CSO:4009/269

AUTHOR: KONG Lingjiang [1313 0109 3068]
KONG Fanxin [1313 5603 0207]
LIU Xianhui [0491 2009 6540]

ORG: KONG and KONG of Guangxi Normal University and LIU of the Institute of High Energy Physics, Academia Sinica

TITLE: "Elastic Scattering of $K^{\pm}$ Mesons By $^{40-48}Ca$ and the Analysis of Neutron Distributions"

SOURCE: Beijing GAONENG WULI YU HE WULI [PHYSICA ENERGIAE FORTIS ET PHYSICA NUCLEARIS] in Chinese Vol 9, No 1, Jan 85 pp 46-54

TEXT OF ENGLISH ABSTRACT:

The differential cross sections of the elastic scattering of $K^{\pm}$ on $^{40-48}Ca$ are calculated in the framework of eikonal approximation. The theoretical values obtained by using different parameters are compared. Through adjusting the parameters of the neutron distribution, the improvement of the coincidence between the theoretical values and the experimental data is arrived. The result shows that the r.m.s. radius of the neutron distribution of ^{40}Ca is smaller than that of the proton. (about 0.15 fm smaller) and the surface thickness of the neutron distribution of ^{40}Ca is thinner than that of proton. This is consistent with the results of computation made by H. F. method and agrees with the analysis of elastic scattering of protons in the mediate energy on ^{40}Ca by other authors.

12949
CSO: 4009/269

Physics

AUTHOR: GUO Kezun [6753 0668 1415]
DING Linkai [0002 2651 1052]

ORG: Institute of High Energy Physics, Academia Sinica

TITLE: "Influence of Gluson Radiation on the Formation of Cluster Phenomena Observed in Emulsion Chambers"

SOURCE: Beijing GAONENG WULI YU HE WULI [PHYSICA ENERGIAE FORTIS ET PHYSICA NUCLEARIS] in Chinese Vol 9, No 2, Mar 85 pp 129-133

TEXT OF ENGLISH ABSTRACT: The quark-quark scattering mechanism has been shown as one of the sources of cluster phenomena observed in the emulsion chamber experiments. In order to study the influence of gluon radiation on cluster formation, the physical processes involving gluons are included by an approximate Q^2 dependence. The calculation method is described and the results of Monte-Carlo simulation are given.

12949
CSO: 4009/243

AUTHOR: LUO Zihua [5012 4793 5478]
WANG Shuhong [3769 2579 7730]

ORG: Institute of High Energy Physics, Academia Sinica

TITLE: "Beam Matching Calculations in Transverse Motion for the 10MeV Beijing Proton Linac"

SOURCE: Beijing GAONENG WULI YU HE WULI [PHYSICA ENERGIAE FORTIS ET PHYSICA NUCLEARIS] in Chinese Vol 9, No 2, Mar 85 pp 191-199

TEXT OF ENGLISH ABSTRACT: The beam matching calculations in transverse motion for the 10 MeV Beijing Proton Linac are described. The calculated results were used for the quadruple currents when the Linac was in operation. By trimming the quadruple currents around their calculated values, a 63.6 percent beam transmission of the tank was obtained with a single buncher. The calculated results of beam matching given in this paper have proven to be very useful for the Linac operation.

12949
CSO: 4009/243

AUTHOR: JIN Genming [7246 2704 2494]
ZHANG Li [1728 4539]
WANG Ximing [3769 6007 6900]

ORG: Institute of Modern Physics, Academia Sinica

TITLE: "Initial L Distribution of Massive Transfer Reaction in $^{12}C+^{124}Sn$ System"

SOURCE: Beijing GAONENG WULI YU HE WULI [PHYSICA ENERGIAE FORTIS ET PHYSICA NUCLEARIS] in Chinese Vol 9, No 2, Mar 85 pp 205-213

TEXT OF ENGLISH ABSTRACT: Average γ-multiplicity [M_γ] of the cascade γ-rays from the residual nuclei corresponding to α and ^8Be direct emission in $^{12}C+^{124}Sn$ system has been measured by means of α-γ coincidence technique. The most possible initial orbital angular momentum obtained from [M_γ] are 35.5 ($\hbar$) and 39 ($\hbar$) for the capture of ^8Be and α by target nucleus respectively. These values are around the critical angular momentum l_{cr} = 36.7($\hbar$) for complete fusion. This indicates that the massive transfer reactions in this system with spherical target nucleus are also the peripheral collisions, not center collisions.

12949
CSO: 4009/243

AUTHOR: LIU Min [0491 2404]
Tsuneo Amano

ORG: LIU of the Institute of Physics, Academia Sinica and Amano of Nagoya University, Japan

TITLE: "Adiabatic Evolution of MHD Equilibrium Configurations of Plasma"

SOURCE: Beijing WULI XUEBAO [ACTA PHYSICA SINICA] in Chinese Vol 34, No 3, Mar 85 pp 306-313

TEXT OF ENGLISH ABSTRACT: Combining the MHD equilibrium equation of axisymmetric plasma with a flux surface-averaged description of the plasma, the evolutional configurations of adiabatic compressional plasma equilibria are computed. The resutls are consistent with the analytic scaling laws given by Furth and Yoshikawa. Some results of the configuration evolution for two types of compressional plasma are presented.

12949
CSO: 4009/230

AUTHOR: ZHANG Chengfu [1728 2110 4395]
KE Fujiu [2688 1318 0036]

ORG: ZHANG of the Department of Physics, Beijing University and KE of the Institute of Physics, Academia Sinica

TITLE: "On Two-dimensional Solitary Drift Waves in Inhomogeneous Magnetized Plasma"

SOURCE: Beijing WULI XUEBAO [ACTA PHYSICA SINICA] in Chinese Vol 34, No 3, Mar 85 pp 298-305

TEXT OF ENGLISH ABSTRACT: This paper presents a nonlinear MHD equation describing 2-D inhomogeneous magnetized plasma. Then a 2-D solitary vortex solution was given. Its structure is similar to the solution obtained in papers [2,3], but it differs from the latter in several aspects. There is no restriction on the values of vortex speeds and the solitary waves can propagate in any direction in the plane with magnetic field B as its normal state. The plasma is adhered to the vortex and moves along with it across B. This implies that the existence of solitary vortices is connected with the anomalous transport of plasma.

12949
CSO: 4009/230

AUTHOR: AN Zhigang [1344 1807 0474]
P.H. Diamond

ORG: AN of Southwestern Institute of Physics, Leshan, Sichuan and Diamond of the Institute of Fusion Studies, University of Texas in Austin, Texas

TITLE: "Effects of Resistive Interchange Instabilities on Energy Confinement in Reversed-field Pinch"

SOURCE: Beijing WULI XUEBAO [ACTA PHYSICA SINICA] in Chinese Vol 34, No 3, Mar 85 pp 314-321

TEXT OF ENGLISH ABSTRACT: Electron conduction losses due to magnetic flutter produced by resistive interchange instabilities and the resulted confinement deteration mechanism are investigated analytically. Using approximate solutions of MHD equations for even and odd potential parities, the potential and magnetic perturbation levels at saturation are estimated. These results are used to calculate the stochastic magnetic field diffusion coefficients. An expression for the anomalous electron thermal conductivity is then derived for collisionless and collisional regimes. Scaling laws for energy confinement are infered therefrom.

12949
CSO: 4009/230

AUTHOR: XU Dewei [1776 1795 4850]
WANG Xianxiu [3076 6343 4423]
ZHAO Jiran [6392 4949 3544]
JIANG Minhua [3068 2404 5478]

ORG: XU and WANG of Changchun Institute of Physics, Academia Sinica and ZHAO and JIANG of Shanghai Institute of Optics and Fine Mechanics, Academia Sinica

TITLE: "Nonlinear Optical Effects of Polycrystalline Waveguide Thin Film By High Power Laser Excitation"

SOURCE: Beijing WULI XUEBAO [ACTA PHYSICA SINICA] in Chinese Vol 34, No 3, Mar 85 pp 414-420

TEXT OF ENGLISH ABSTRACT: In ZnS waveguide thin film, by using a positive mode-simulated ps laser beam and light wave coupler, a phase matching between fundamental mode $TE_3(\omega)$ and second harmonic mode TE_8 (2ω) has been achieved; the third harmonic spectra was also observed. The width of the spectral curves were 1.3 and 1.4Å respectively. The conversion efficiency of the second harmonic is 1.8×10^{-3} while the incident fundamental power is 20 MW.

12949
CSO: 4009/230

AUTHOR: WU Dingfen [0702 7844 5358]
WANG Dening [3769 1795 1337]

ORG: Shanghai Institute of Metallurgy, Academia Sinica

TITLE: "A Model of Ohmic Contact of GaAs and Other Semiconductor"

SOURCE: Beijing WULI XUEBAO [ACTA PHYSICA SINICA] in Chinese Vol 34, No 3, Mar 85 pp 332-340

TEXT OF ENGLISH ABSTRACT: An inverse proportionality between the specific contact resistance ρ_c of n-type GaAs and its carrier concentration N_D has been shown by a lot of experimental facts. In this paper, a comment is made on the various viewpoints about this phenomenon in the literatures and their shortcomings are pointed out as well. According to the band structure of ohmic contact, a new model, assuming that ρ_c consists of two parts (ρ_{c1} and ρ_{c2}), is put forward. ρ_{c1} occurs between the contact metal and its underlying highly doped semiconductor layer (N_{Dc}) after alloying. ρ_{c2} is brought about by a barrier which appeared as the result of the concentration difference between the N_{Dc} and the active layer N_D. If the alloying process is optimized and thus the N_{Dc} is very high, then ρ_{c1} is very small and ρ_{c2} gives the main contribution to ρ_c. In this case, an inverse proportionality between ρ_c and N_D can be found, if $N_D < N_C$ (N_C is the effective state density). When $N_D > N_C$, ρ_{c2} can be neglected due to the disappearance of the barrier. In this case, ρ_c is determined by ρ_{c1} which should depend only on N_{Dc}. Based on the above description, a theoretical deduction was carried out and the result not only can explain the experimental data of n-type GaAs ohmic contact very effectively, but also the experimental facts of p-type Si ohmic contact presented in literatures. We believe that this method can also be extended to the case of other III-V compound semiconductors such as p-type GaAs and P-type InP etc.

12949
CSO: 4009/230

END