Final Technical Report

DESIGN, MODELING, AND FABRICATION OF A QUASI-OPTICAL POWER COMBINER BASED ON THE TALBOT EFFECT

Principle Investigator: Assistant Professor Tristan J. Tayag
Research Assistant: Ms. Sophie M. Penninck
Department of Engineering
Texas Christian University
TCU Box 298640
Fort Worth, Texas 76129

ARO Proposal Number: P-39063-EL-II
Grant Number: DAAG55-98-1-0440

Submitted To:
ARO Representative: Dr. James F. Harvey
U.S. Army Research Office
AMSRL-RO-RI (Sylvian Hall)
4300 South Miami Boulevard
P.O. Box 12211
Research Triangle Park, North Carolina 27709-2211

19990706 080

February 1999

DISTRIBUTION STATEMENT A
Approved for Public Release
Distribution Unlimited

REPORT DOCUMENTATION PAGE

Form Approved
OMB NO. 0704-0188

Public reporting burden for this collection of information is estimated to average 1 hour per response, including the time for reviewing instructions, searching existing data sources, gathering and maintaining the data needed, and completing and reviewing the collection of information. Send comment regarding this burden estimates or any other aspect of this collection of information, including suggestions for reducing this burden, to Washington Headquarters Services, Directorate for information Operations and Reports, 1215 Jefferson Davis Highway, Suite 1204, Arlington, VA 22202-4302, and to the Office of Management and Budget, Paperwork Reduction Project (0704-0188), Washington, DC 20503.

1. AGENCY USE ONLY *(Leave blank)*	2. REPORT DATE	3. REPORT TYPE AND DATES COVERED
	February 1999	Final

4. TITLE AND SUBTITLE	5. FUNDING NUMBERS
Design, Modeling, and Fabrication of a Quasi-Optical Power Combiner Based on the Talbot Effect	DAAG55-98-1-0440
6. AUTHOR(S)	
Assistant Professor Tristan J. Tayag	
7. PERFORMING ORGANIZATION NAMES(S) AND ADDRESS(ES)	8. PERFORMING ORGANIZATION REPORT NUMBER
Texas Christian University Fort Worth, TX 76129	
9. SPONSORING / MONITORING AGENCY NAME(S) AND ADDRESS(ES)	10. SPONSORING / MONITORING AGENCY REPORT NUMBER
U.S. Army Research Office P.O. Box 12211 Research Triangle Park, NC 27709-2211	ARO 39063.1-EL-II

11. SUPPLEMENTARY NOTES

The views, opinions and/or findings contained in this report are those of the author(s) and should not be construed as an official Department of the Army position, policy or decision, unless so designated by other documentation.

12a. DISTRIBUTION / AVAILABILITY STATEMENT	12 b. DISTRIBUTION CODE
Approved for public release; distribution unlimited.	

13. ABSTRACT *(Maximum 200 words)*

This document is a final technical report describing the work completed under the Short-Term Research Initiative (STIR) contract (DAAG55-98-1-0440) awarded to Texas Christian University (TCU) by the U.S. Army Research Office on 20 July 1998. The work was carried out in collaboration with Professor Michael Steer's research group at the North Carolina State University (NCSU). The objective of this effort was to investigate the feasibility of quasi-optical power combiners based on the Talbot effect. At TCU, planar waveguide structures were designed in the X-band (8-12.4 GHz). Waveguide structures were constructed in Rexolite 1422 and characterized at NCSU. Although the optimum designs were not fabricated due to waveguide material limitations, the electromagnetic field data indicated the structure and high degree of symmetry associated with multimode interference phenomena. This favorable result is key to the demonstration of a quasi-optical power combiner based on the Talbot effect.

14. SUBJECT TERMS			15. NUMBER IF PAGES
			16. PRICE CODE
17. SECURITY CLASSIFICATION OR REPORT	18. SECURITY CLASSIFICATION OF THIS PAGE	19. SECURITY CLASSIFICATION OF ABSTRACT	20. LIMITATION OF ABSTRACT

TABLE OF CONTENTS

Table of Contents i

1.0 Summary 1

2.0 Introduction 1

2.1 Background 2

2.2 Project Objectives 2

3.0 Quasi-Optical Device Simulation 4

3.1 Planar Waveguide Structures 4

3.2 Three-dimensional Waveguide Structures 6

4.0 Experimental Device Characterization 8

5.0 Conclusions and Suggestions for Further Work 10

6.0 References 12

Appendix 14

1.0 SUMMARY

This document is a final technical report describing the work completed under the Short-Term Research Initiative (STIR) contract (DAAG55-98-1-0440) awarded to Texas Christian University (TCU) by the U.S. Army Research Office on 20 July 1998. The work was carried out in collaboration with Professor Michael Steer's research group at the North Carolina State University (NCSU). The objective of this effort was to investigate the feasibility of quasi-optical power combiners based on the Talbot effect. At TCU, planar waveguide structures were designed in the X-band (8-12.4 GHz). Waveguide structures were constructed in Rexolite 1422 and characterized at NCSU. Although the optimum designs were not fabricated due to waveguide material limitations, the electromagnetic field data indicated the structure and high degree of symmetry associated with multimode interference phenomena. This favorable result is key to the demonstration of a quasi-optical power combiner based on the Talbot effect.

As a result of the research conducted during this project, the following manuscript is in preparation for journal submission: T. J. Tayag, M. B. Steer, J. Davis, A. Yakovlev, and J. F. Harvey, "Quasi-optical power combining based on the Talbot effect in planar optical waveguides," in preparation.

2.0 INTRODUCTION

2.1 BACKGROUND

Millimeter wave circuits operating at power levels in the 50-to-100 W range are desirable for applications in radar and electronic warfare; whereas, circuits operating at power levels in the 15-to-20 W range are useful for omni-directional communication links. Quasi-optical techniques provide a means of combining power from numerous solid-state millimeter wave sources. Conventional techniques use three-dimensional free space for power combining. A disadvantage of this technique is the heat dissipation of the active elements, which are suspended in the three-dimensional volume.

Recently, two-dimensional planar architectures for millimeter wave power combining have been investigated (Hwang et al., 1996, Alexanian and York, 1997 and Perkons and Ioth, 1997). The two-dimensional waveguide geometry is well suited to MMIC technology. Heat sinking is naturally achieved since the active devices are located on the bottom of the structure and are in thermal contact with the ground plane. Additionally, planar power combining architectures are more amenable to photolithographic fabrication processes, less sensitive to device instabilities, smaller, lighter weight, and more rugged (Harvey et al., 1996).

Current approaches to power combining in the two-dimensional geometry involve using waveguide lenses and polarizers. These elements and scattering within the waveguide contribute about 6 to 8 dB of additional loss (Hwang et al., 1996 and Harvey et al., 1996). Removal of these elements within the waveguide structure will not only improve device throughput, but also simplify device design and fabrication. The effort undertaken in this project was based on an imaging technique in waveguide structures, which does not require lenses. In this project, we investigated the feasibility of applying the Talbot effect to produce lensless waveguide power combiners. The Talbot effect (also known as self-imaging or multimode interference) is an imaging technique based on the lateral periodicity of the object (Talbot, 1836).

2.2 PROJECT OBJECTIVES

The overall objective of this project is to reduce the throughput loss in quasi-optical power combiners by obviating the need for waveguide lensing elements. The approach undertaken in this project was to apply the lensless imaging properties of the Talbot effect, which have been used extensively in the infrared region of the electromagnetic spectrum.

Under the guidance of Dr. James Harvey (ARO Representative), the specific tasks as outlined in the project proposal (ARO Proposal Number 39063-EL-II) were modified. The tasks agreed upon at the start of the project bifurcated into two approaches and were as follows:

Planar Waveguide Approach

- Task 1: Design Waveguide Structures (TCU)
- Task 2: Construct and Characterize Planar Waveguide (NCSU)

Three-Dimensional Waveguide Approach

- Task 3: Design Waveguide Structures (NCSU)
- Task 4: Fabricate Hollow Cavity Waveguide (TCU)
- Task 5: Characterize Three-Dimensional Waveguide (NCSU)

A major change in the direction of the originally proposed research was to experimentally demonstrate a passive power *splitting* structure as opposed to simulating a power *combining* structure. This more ambitious schedule required closer collaboration with NCSU than originally proposed. Therefore, the principle investigator made 4 separate trips to NCSU during the summer of 1998.

3.0 QUASI-OPTICAL DEVICE SIMULATION

3.1 PLANAR WAVEGUIDE STRUCTURES

The operation of the Talbot effect waveguide splitter is described as follows: A single mode input rib excites the numerous lateral modes supported by a wide laterally-confined Multimode Interference (MMI) waveguide region. The lateral modes travel with different phase velocities and therefore become dephased. Self-images of the input are formed when the superposition of the modes in the image plane matches the original modal distribution at the input plane. This condition occurs at observation distances where the accumulated phase differences among the excited modes are integral multiples of 2π. This allows the excited modes to constructively interfere and reproduce the input modal distribution. Talbot effect splitters and combiners are based on the property that *multiple* self-images are formed at certain observation planes that are located between the single self-image planes.

The PI and his collaborators have developed a model of the Talbot effect in planar optical waveguides. This model is based on modal decomposition, propagation, and reconstruction of the electromagnetic field (Mackie et al., 1995). By assuming separability of the field dependencies along the three directions, and then finding the exact wavefunctions of the MMI region, they are able to model the evolution of the electric field as it propagates through device. This modeling capability was used to design and simulate planar waveguide structures operating at X-band frequencies.

The geometry of a 1x4 waveguide power splitter is depicted in Figure 3.1. The waveguide supports a single transverse mode in the transverse (i.e., y-axis) direction. In the passive splitter configuration, a single input waveguide feeds a laterally wider multimode interference (MMI) region. At the output of the MMI region are 4 output waveguides. The dielectric material of the waveguide is a microwave plastic with tradename Rexolite 1422. This material has a dielectric constant of 2.53 through 500 GHz. Throughout the simulations, we assume that the dielectric waveguide core is surrounded by a metal cavity.

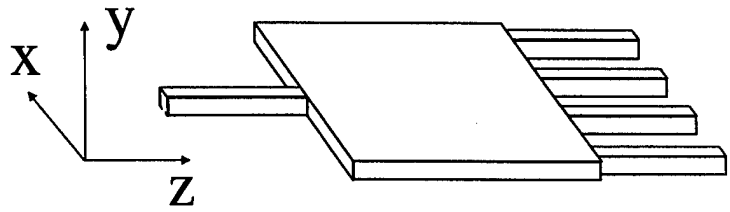

Figure 3.1 Structure of the planar waveguide.

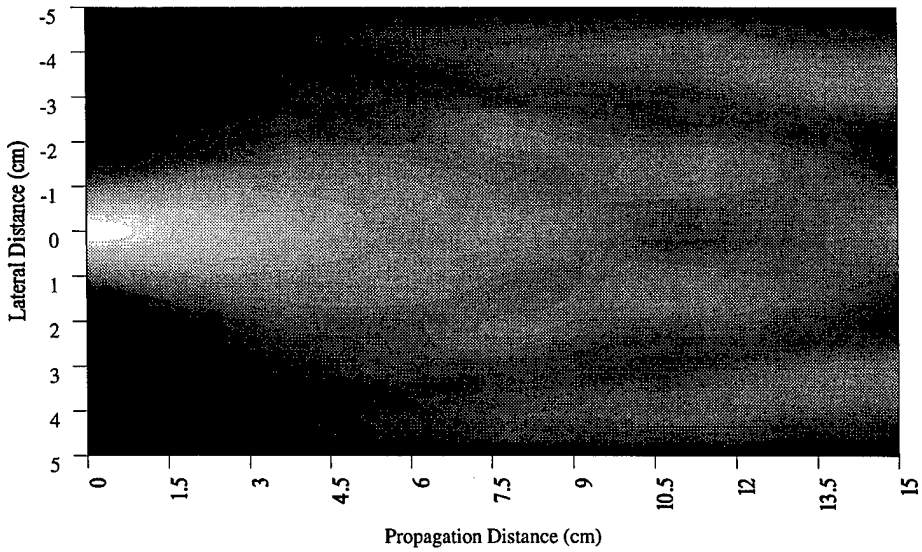

Figure 3.2 Field distribution within the MMI region. Frequency: 10 GHz; polarization: TE; MMI index: 1.5906; MMI width: 10 cm; number of modes: 10; input Gaussian waist: 0.8 cm.

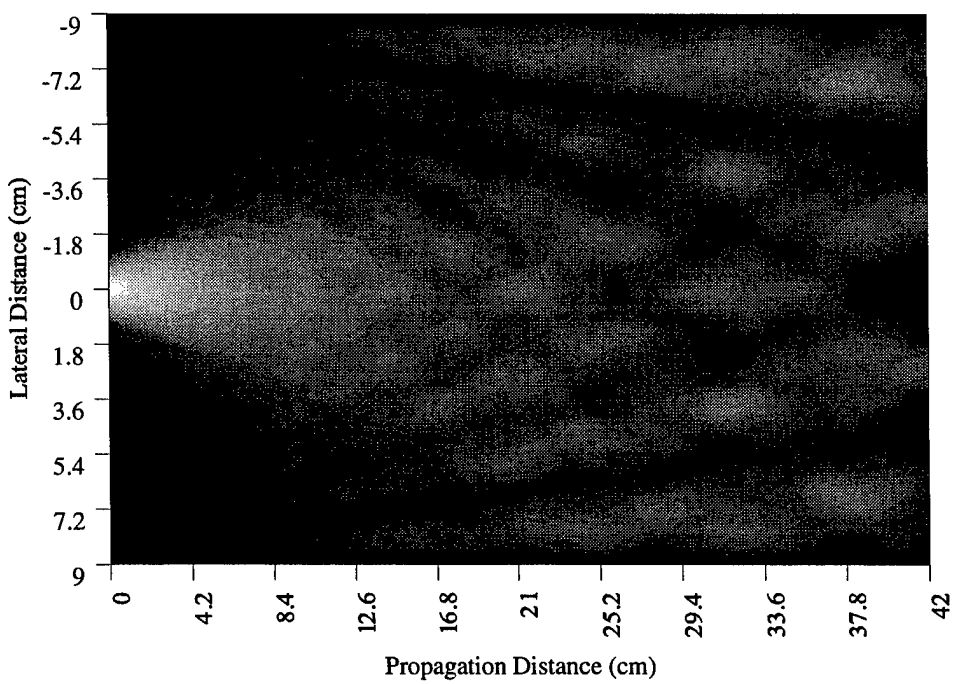

Figure 3.3 Field distribution within the MMI region. Frequency: 10 GHz; polarization: TE; MMI index: 1.5906; MMI width: 18 cm; number of modes: 19; input Gaussian waist: 0.8 cm.

In the first set of designs, a 1x4 passive splitter was simulated. The width and length dimensions of the MMI region are variable parameters. Note that the width of the MMI region is critical since it determines the number of lateral modes supported by the waveguide. An increased number of lateral modes means more exact self-image formation of the input field distribution. The trade-off is that the MMI length varies quadratically with the width, so large mode volumes incur long device structures.

Figure 3.2 indicates the effect of an insufficient number modes supported in the MMI region. Increasing the width of the MMI region to 18 cm almost doubles the number of lateral modes in the MMI region from 10 to 19. Figure 3.3 shows a 1x4 splitter at 10 GHz. The electric field profile (linear scale) is plotted in Figure 3.4 for the 1x4 splitter of Figure 3.3.

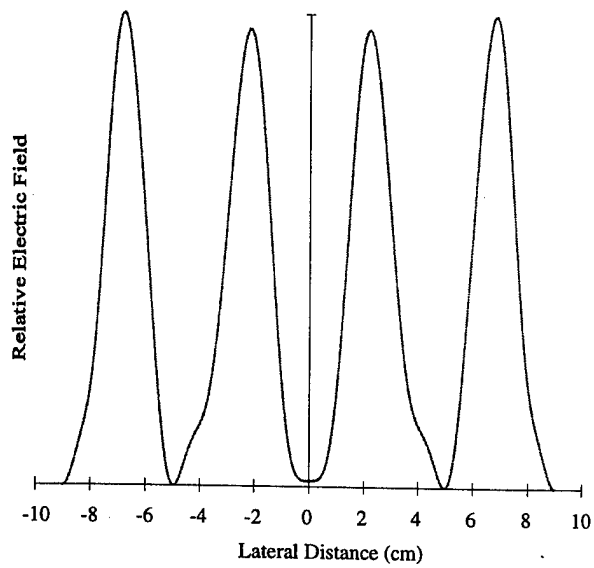

Figure 3.4 Electric field profile at a distance z = 39.48 cm inside the MMI region for the 1x4 splitter of Figure 3.3.

A power combiner is formed by propagating the fields in the –z-direction of Figure 3.1. Note that specific phase relationships must be satisfied among the 4 inputs for a single self-image to form at the output of the waveguide. The electric field distribution of a 4x1 combiner is shown in Figure 3.5. The field profile of the output self-image is shown in Figure 3.6.

Greatly improved self-image formation can be achieved by increasing the number of modes supported by the MMI region. A 1x8 Talbot effect splitter was designed for operation at 8 GHz. The MMI width was increased to 40 cm so that 33 lateral modes were supported. Note that the 1x8 self-image plane was increased to about 82 cm. The field distribution and field profile of the 8 outputs are shown in Figures 3.7 and 3.8.

The project was limited in the geometry of structures, which could be constructed at NCSU. The planar waveguide structure, which was constructed at NCSU had the characteristics listed in Table 3.1.

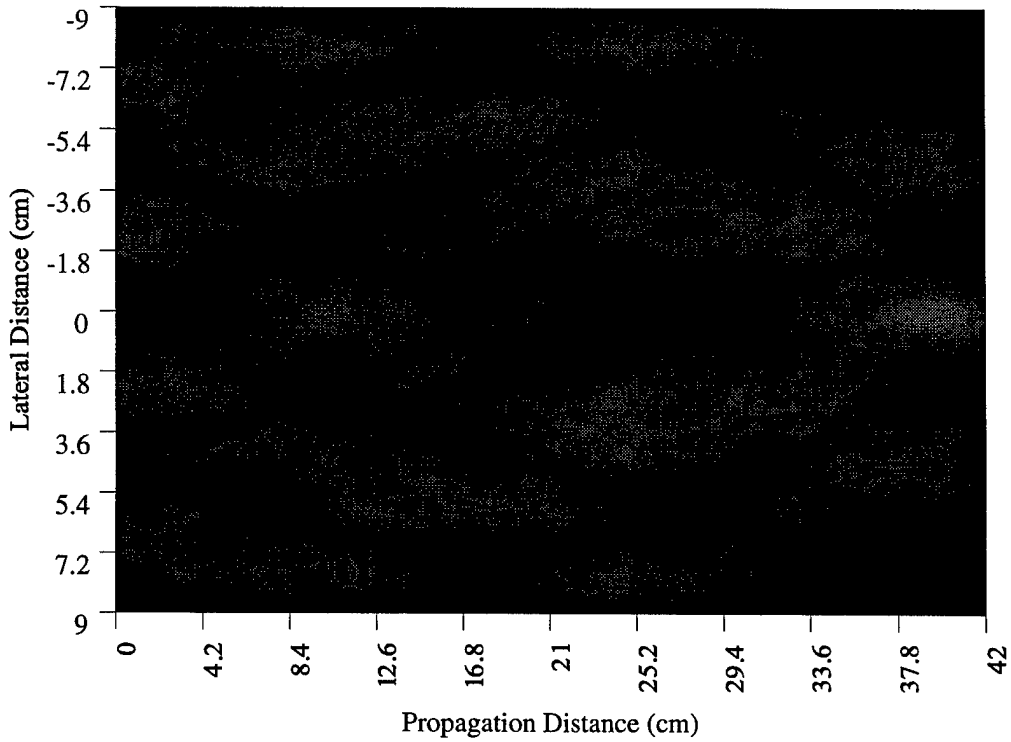

Figure 3.5 Field distribution within the MMI region for a 4x1 combiner.
Frequency: 10 GHz; polarization: TE; MMI index: 1.5906;
MMI width: 18 cm; number of modes: 19; input Gaussian waist: 0.8 cm.

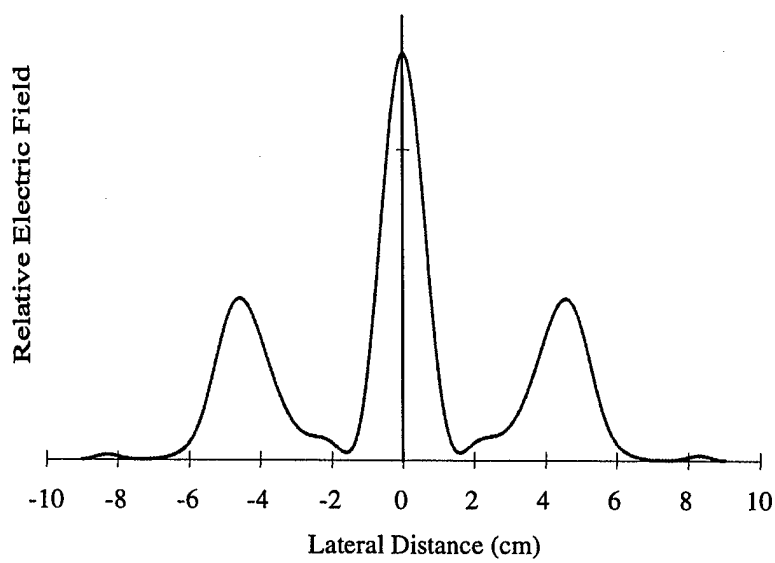

Figure 3.6 Electric field profile at z = 39 cm for a 4x1 combiner.
Frequency: 10 GHz; polarization: TE; MMI index: 1.5906;
MMI width: 18 cm; number of modes: 19; input Gaussian waist: 0.8 cm.

Input Waveguide:	
• transverse height (cm)	1.27
• lateral width (cm)	1.50
• waveguide core index	1.59
MMI Region:	
• transverse height (cm)	1.27
• lateral width (cm)	27.94
• longitudinal length (cm)	22.00
• waveguide core index	1.59

Table 3.1 Specifications of the waveguide structure constructed at NCSU.

At an operational frequency of 8.23 GHz, the MMI region supported 24 modes. The field distribution for the structure described in Table 3.1 is displayed in Figure 3.9 for an MMI length of 28 cm. The field profile at z = 24.37 cm is shown in Figure 3.10. The experimental results for this structure are presented in Section 4.0.

3.2 THREE-DIMENSIONAL WAVEGUIDE STRUCTURES

The Talbot effect can be extended to the formation of a two-dimensional array of self-images. In this case, three-dimensional waveguide structures are needed. The objective was to produce a 3x3 spot array at the output of a hollow cavity multimode waveguide operating at 33 GHz. To maintain compatibility with existing research programs, it was decided that that multimode waveguide dimensions will be fixed at 4.2 x 4.2 cm^2.

Electromagnetic field propagation software developed at NCSU was used in the design of the three dimensional waveguide structures. Unfortunately, poor one-to-one self-imaging resulted. We believe that the imaging quality was degraded due to the limited number of modes supported in the 4.2 x 4.2 cm^2 waveguide.

A simple experiment illustrates the effect. At 33 GHz, a single mode is supported in the 0.5 x 0.5 cm^2 hollow cavity input waveguide. At the interface between the input waveguide and the 4.2 x 4.2 cm^2 multimode waveguide, the electric field is decomposed into those modes supported by the MMI region. If a sufficient number of modes is supported by the MMI region, faithful representation of the input field distribution is achieved.

Figure 3.11 is a mesh plot of the electric field distribution at an incremental distance of 10 μm from the input/multimode waveguide interface. The ripple pattern indicates the interaction between the input field and MMI region sidewalls. If an insufficient number of modes are available to reconstruct the object, a degraded image will be formed at the self-image plane.

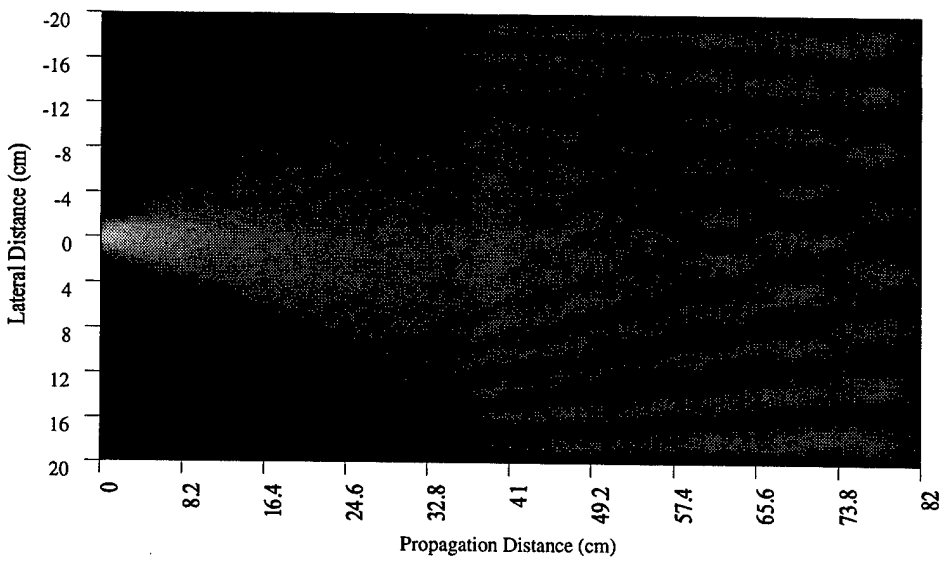

Figure 3.7 Field distribution within the MMI region for a 1x8 splitter.
Frequency: 8 GHz; polarization: TE; MMI index: 1.5906;
MMI width: 40 cm; number of modes: 33; input Gaussian waist: 1.18 cm.

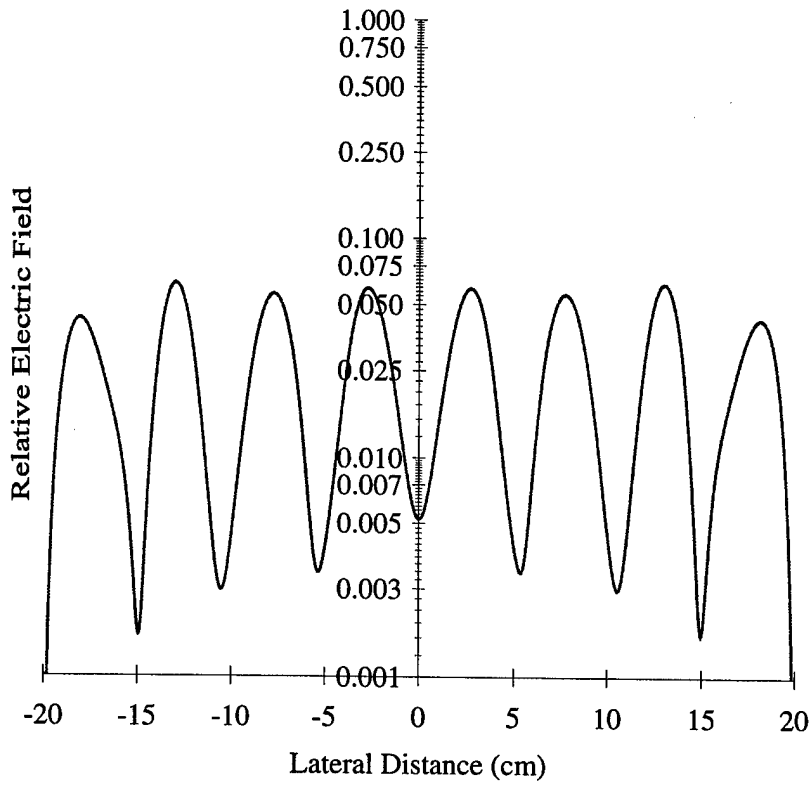

Figure 3.8 Electric field profile at z = 78.7 cm for a 1x8 splitter.
Frequency: 8 GHz; polarization: TE; MMI index: 1.5906;
MMI width: 40 cm; number of modes: 33; input Gaussian waist: 1.18 cm.

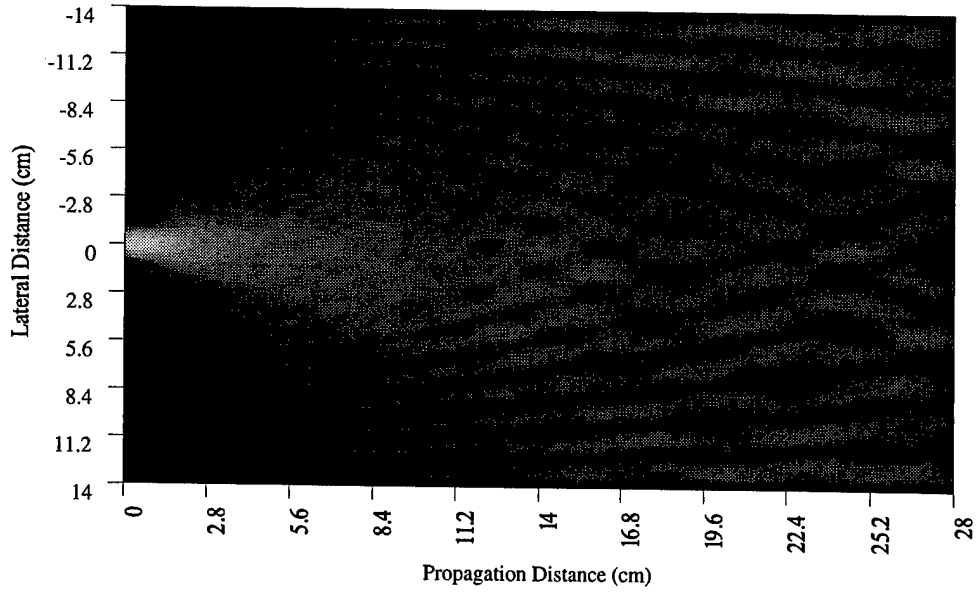

Figure 3.9 Field distribution within the MMI region for the experimental structure. Frequency: 8.23 GHz; polarization: TE; MMI index: 1.59; MMI width: 27.94 cm; number of modes: 24; input Gaussian waist: 0.44 cm.

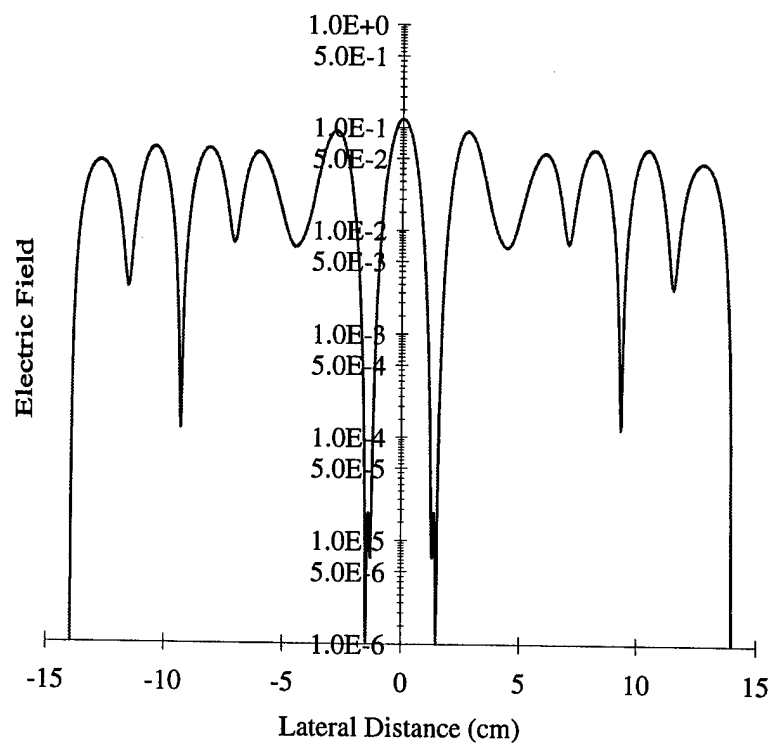

Figure 3.10 Electric field profile at z = 24.37 cm for the experimental structure. Frequency: 8.23 GHz; polarization: TE; MMI index: 1.5906; MMI width: 27.94 cm; number of modes: 24; input Gaussian waist: 0.44 cm.

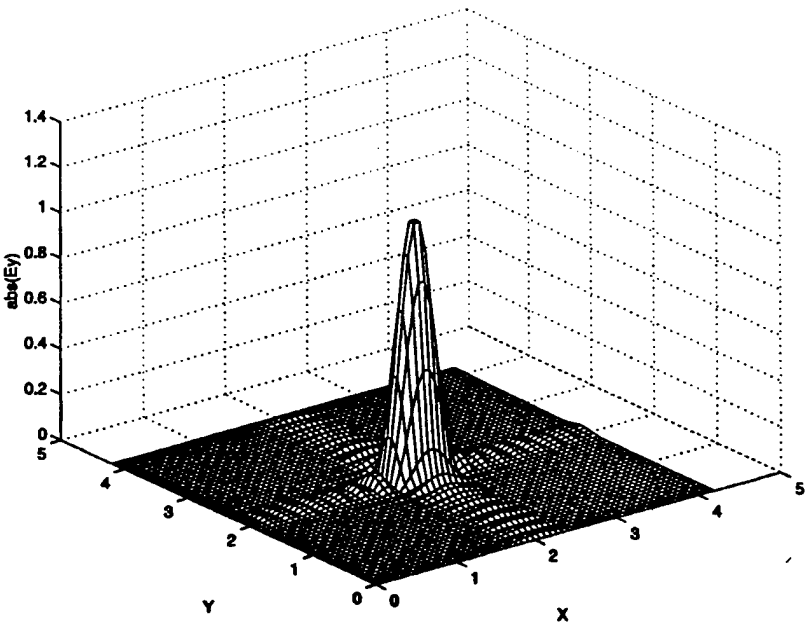

Figure 3.11 Electric field distribution of the three-dimensional waveguide structure at a distance of 10 μm beyond the input/multimode waveguide interface. Input waveguide: 0.5 x 0.5 cm^2; MMI region: 4.2 x 4.2 cm^2.

The waveguide structure for two-dimensional array formation was to be fabricated in a hollow cavity waveguide made of brass. The machining of the structure was to be performed at TCU on computer-numerically-controlled (CNC) machining tools. The Appendix contains the computer-aided design (CAD) drawings for this structure.

4.0 EXPERIMENTAL DEVICE CHARACTERIZATION

The waveguide structure detailed in Table 3.1 was constructed and characterized at NCSU. The dielectric core material was Rexolite 1422. To reduce loss, the dielectric of both the input waveguide and the MMI region were wrapped with aluminum foil. The MMI region was center-fed as shown in Figure 4.1. A 5-cm-long tapered waveguide was used at the output of the MMI region to reduce reflection and to outcouple the energy. A 1-cm-long monopole antenna was scanned across the lateral width of the output taper. The probe was positioned about 1.5 cm from the MMI region/taper interface and sample points were taken every 5 mm along the lateral direction. The signal was detected with a Hewlett-Packard 8510 Vector Network Analyzer and data was collected at the following frequencies: 7.53 GHz, 7.58 GHz, 7.59 GHz, 8.23 GHz, and 8.27 GHz.

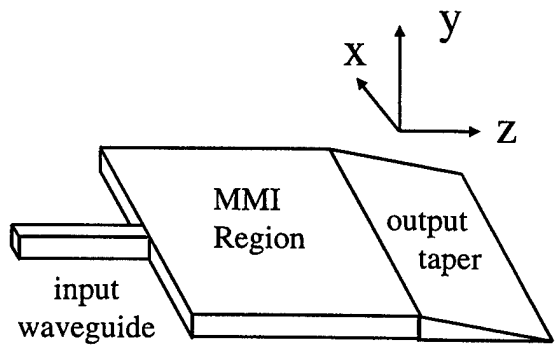

Figure 4.1 Structure of the planar waveguide constructed at NCSU.

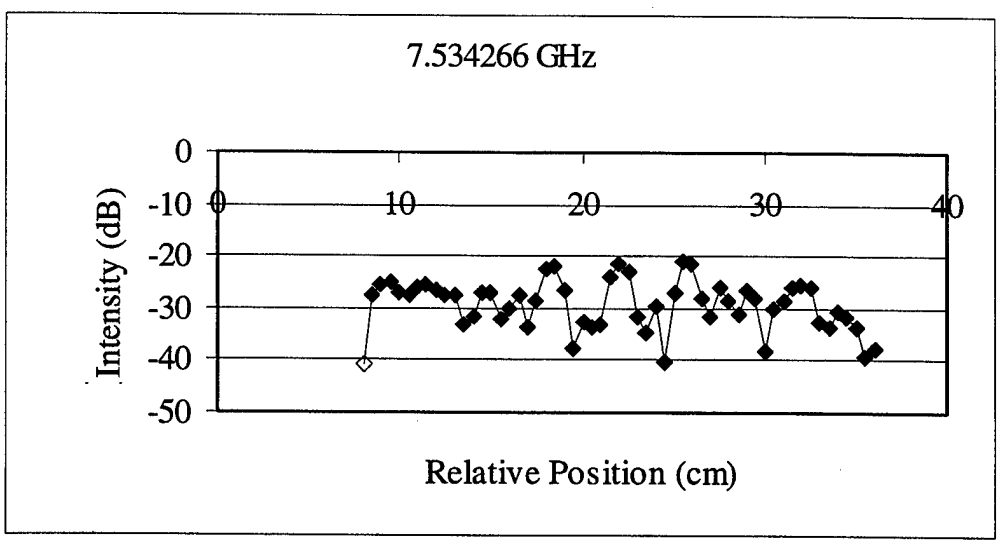

Figure 4.2 (a) Electric field profile of the experimental structure at 7.534266 GHz.

Figure 4.2 (b) Electric field profile of the experimental structure at 7.581019 GHz.

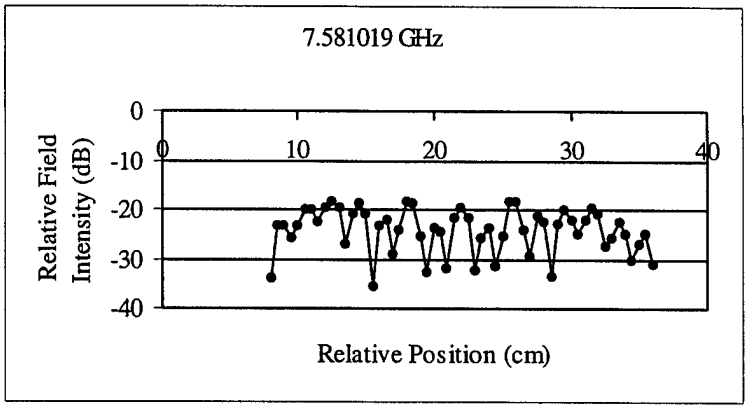

Figure 4.2 (c) Electric field profile of the experimental structure at 7.590609 GHz.

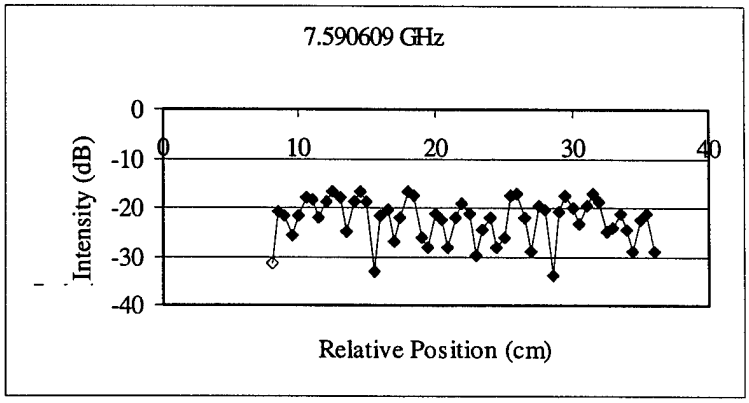

Figure 4.2 (d) Electric field profile of the experimental structure at 8.230769 GHz.

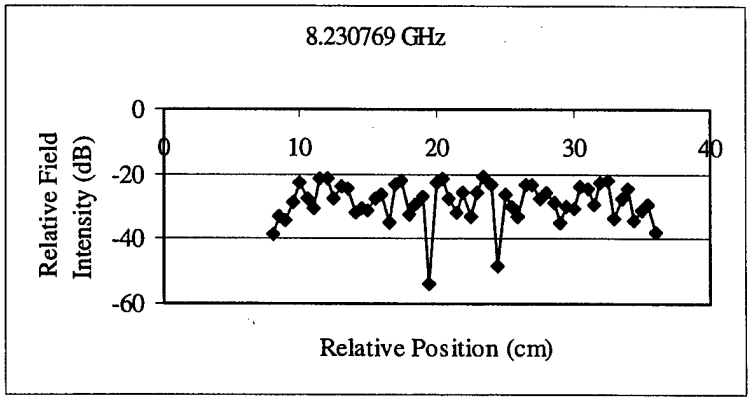

Figure 4.2 (e) Electric field profile of the experimental structure at 8.27033 GHz.

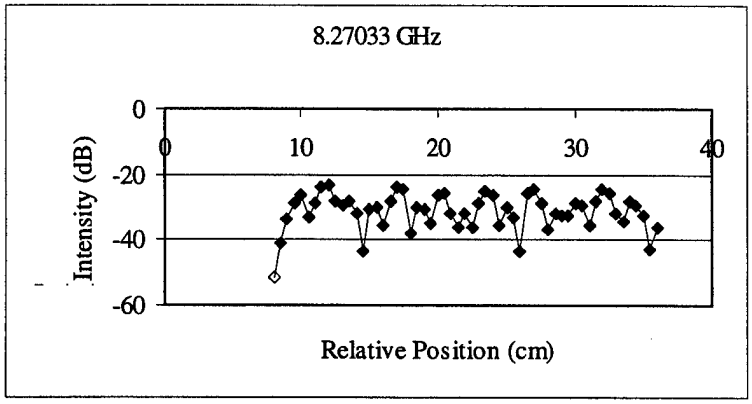

5.0 CONCLUSIONS AND SUGGESTIONS FOR FURTHER WORK

The simulation and experimental data collected during the course of this STIR program indicates that the Talbot effect is a viable technology for quasi-optical power splitting and combining. Talbot image formation in planar waveguides is based on the phenomenon of multimode interference. Each experimental data set in Section 4.0 depicts the high degree of symmetry characteristic of multimode interference in planar waveguides. In addition, the distinct pair of nodes predicted in the waveguide model shown in Figures 3.9 and 3.10 (repeated below) were apparent in the experimental data shown in Figure 4.2 (d) (repeated below).

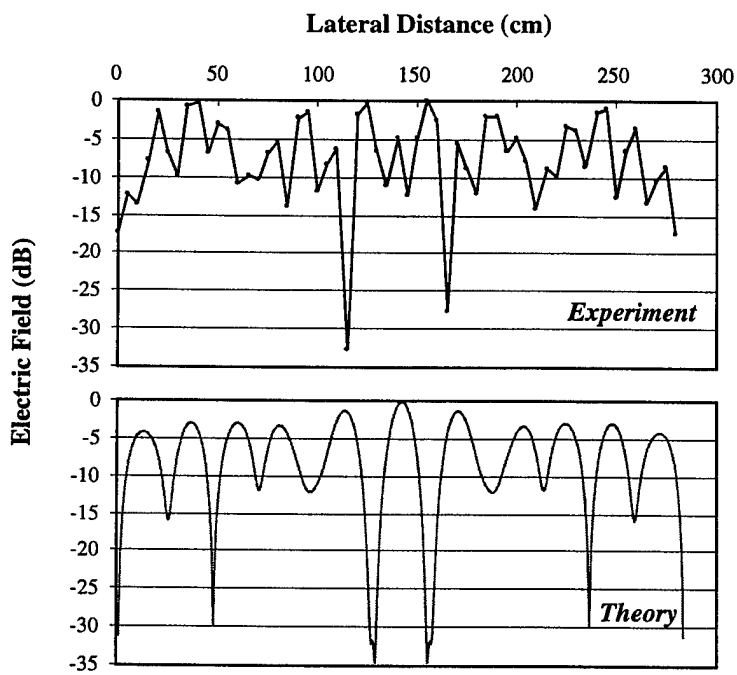

Figures 4.2 (d) and 3.10 Experimental data and theoretical model of the waveguide structure constructed at NCSU. Frequency: 8.230769 GHz; polarization: TE; MMI index: 1.59; input Gaussian width: 0.44 cm; MMI lateral width: 27.94 cm; MMI length: 24.37 cm; number of lateral modes: 24.

Preliminary investigations were conducted on the generation of two-dimensional array splitter/combiners via the Talbot effect. This study indicated that the dimensions of the multimode waveguide must be carefully considered. A trade-off exists between the fidelity of self-image formation (i.e., number of modes supported in the MMI region) and waveguide size (i.e., the MMI length increases quadratically with MMI width).

The application of the Talbot effect to quasi-optics is a highly promising and largely untapped field of research. The use of Talbot imaging in a waveguide would obviate the

need for lensing elements within the cavity. Thereby decreasing the throughput losses. The following are recommendations for further study in this area:

a. Demonstration of the 1x8 power splitter designed in Figures 3.7 and 3.8. A critical issue is the throughput loss.
b. Demonstration of a Talbot effect waveguide power combiner. An initial investigation was performed at the onset of this project and the simulation results are summarized in Figures 3.3 – 3.6. A critical issue is the tolerance on phase control of the inputs.
c. Integration of waveguide amplifiers with the Talbot effect power combiners. An optimum design would include geometries of the source, amplifier, and waveguide. A critical issue is the variation in phase delay through each of the solid state amplifiers.
d. Demonstration of the two-dimensional power splitting and combining based on the Talbot effect.

6.0 REFERENCES

J. F. Harvey, M. B. Steer, J. W. Mink, H.-S. Hwang, T. W. Nuteson, and A. C. Paolella, "Advances in quasi-optical power combiners provide path to radar and communications enhancements," *Proceedings of the 20th Army Science Conference*, vol. 1, pp. 161-165, 1996.

T. W. Nuteson, G. P. Monahan, M. B. Steer, K. Naidshadham, J. W. Mink, K. Kojucharoff, and J. F. Harvey, "Full-wave analysis of quasi-optical structures," *IEEE Transactions on Microwave Theory and Technology*, vol. MTT-44, 1996.

H.-S. Hwang, T. W. Nuteson, M. B. Steer, J. W. Mink, J. F. Harvey, and A. C. Paolella, "Two-dimensional quasi-optical power combining system performance and component design," *IEEE Microwave Theory and Technology International Symposium Digest*, 1996.

H.-S. Hwang, C. W. Hicks, M. B. Steer, J. F. Harvey, and J. W. Mink, "A quasi-optical dielectric slab power combiner with a large amplifier array," *IEEE Microwave and Guided Wave Letters*, vol. 6, pp. 73-75, 1996.

S. Hollung, J. Viam, and Z. B. Popovic, "A bi-directional quasi-optical lens amplifier system," *IEEE Microwave Theory and Technology International Symposium Digest*, pp. 675-678, 1997.

A. R Perkons and T. Ioth, "TE surface power combining by a planar 10-element active lens amplifier," *IEEE Microwave Theory and Technology International Symposium Digest*, pp. 691-694, 1997.

A. Alexanian and R. A. York, "Broadband waveguide-based spatial combiner," *IEEE Microwave Theory and Technology International Symposium Digest*, 1997.

H. F. Talbot, "Facts relating to optical science No. IV," *London, Edinburgh Philosophical Magazine, Journal of Science*, vol. 9, pp. 401-407, 1836.

O. Bryngdahl, "Image formation using self-imaging techniques," *Journal of the Optical Society of America*, vol. 63, no. 4, pp. 416-419, 1973.

R. M Jenkins, R. W. J. Devereux, and J. M. Heaton, "A novel waveguide Mach-Zehnder interferometer based on multimode interference phenomena," *Optics Communications*, vol. 109, pp. 1-14, 1994.

R. M. Jenkins, R. W. J. Devereux, and J. M. Heaton, "Waveguide beam splitters and recombiners based on multimode propagation phenomena," *Optics Letters*, vol. 17, no. 14, pp. 991-993, 1992.

R. M. Jenkins and R. W. J. Devereux, "Effect of field regeneration on the TEM_{00} transmission characteristics of a circular-section waveguide," *Applied Optics*, vol. 31, no. 24, pp. 5086-5091, 1992.

J. M. Heaton, R. M. Jenkins, D. R. Wight, J. T. Parker, J. C. H. Birbeck, and K. P. Hilton, "Novel 1-to-N way integrated optical beam splitters using symmetric mode mixing in GaAs/AlGaAs multimode waveguides," *Applied Physics Letters*, vol. 61, no. 15, pp. 1754-1756, 1992.

R. M. Jenkins, J. M. Heaton, D. R. Wight, J. T. Parker, J. C. H. Birbeck, G. W. Smith, and K. P. Hilton, "Novel 1xN and NxN integrated optical switches using self-imaging multimode GaAs/AlGaAs waveguides," *Applied Physics Letters*, vol. 64, no. 6, pp. 684-686, 1994.

L. B. Soldano and E. C. M. Pennings, "Optical multi-mode interference devices based on self-imaging: Principles and Applications," *Journal of Lightwave Technology*, vol. 13, no. 4, pp. 615-627, 1995.

L. B. Soldano, F. B. Veerman, M. K. Smit, B. H. Verbeek, A. H. Dubost, and E. C. M. Pennings, "Planar monomode optical couplers based on multimode interference effects," *Journal of Lightwave Technology*, vol. 10, no. 12, pp. 1843-1850, 1992.

M. Bachmann, P. A. Besse, and H. Melchior, "General self-imaging properties in NxN multimode interference couplers including phase relations," *Applied Optics*, vol. 33, no. 18, pp. 3905-3911, 1994.

M. Bachmann, P. A. Besse, and H. Melchior, "Overlapping-image multimode interference couplers with a reduced number of self-images for uniform and nonuniform power splitting," *Applied Optics*, vol. 34, no. 30, pp. 6898-6910, 1995.

D. Erasme, L. H. Spiekman, C. G. P. Herben, and M. K. Smit, "Experimental assessment of the reflection of passive multimode interference couplers," *IEEE Photonics Technology Letters*, vol. 9, no. 12, pp. 1604-1606, 1997.

P. A. Besse, M. Bachmann, H. Melchior, L. B. Soldano, and M. K. Smit, "Optical bandwidth and fabrication tolerances of multimode interference couplers," *Journal of Lightwave Technology*, vol. 12, no. 6, pp. 1004-1009, 1994.

G. M. Berry and S. V. Burke, "Analysis of optical rib self-imaging multimode interference (MMI) waveguide devices using the discrete spectral index method," *Optical and Quantum Electronics*, vol. 27, pp. 921-934, 1995.

D. M. Mackie, T. J. Tayag, and G. W. Bryant, "Integrated optical power splitters based on symmetric mode mixing," *Photonic Systems for Antenna Applications V Proceedings*, pp. 223-229, 1995.

T. J. Tayag, D. M. Mackie, and G. W. Bryant, "A manufacturable technique for implementing low-loss self-imaging waveguide beamsplitters," *IEEE Photonics Technology Letters*, vol. 7, no. 8, pp. 896-898, 1995.

R. Ulrich and G. Ankele, "Self-imaging in homogeneous planar optical waveguides," *Applied Physics Letters*, vol. 27, no. 6, pp. 337-339, 1975.

R. Ulrich and T. Kamiya, "Resolution of self-images in planar optical waveguides," *Journal of the Optical Society of America*, vol. 68, no. 5, pp. 583-592, 1978.

APPENDIX: CAD DRAWINGS FOR THE THREE-DIMENSIONAL STRUCTURE

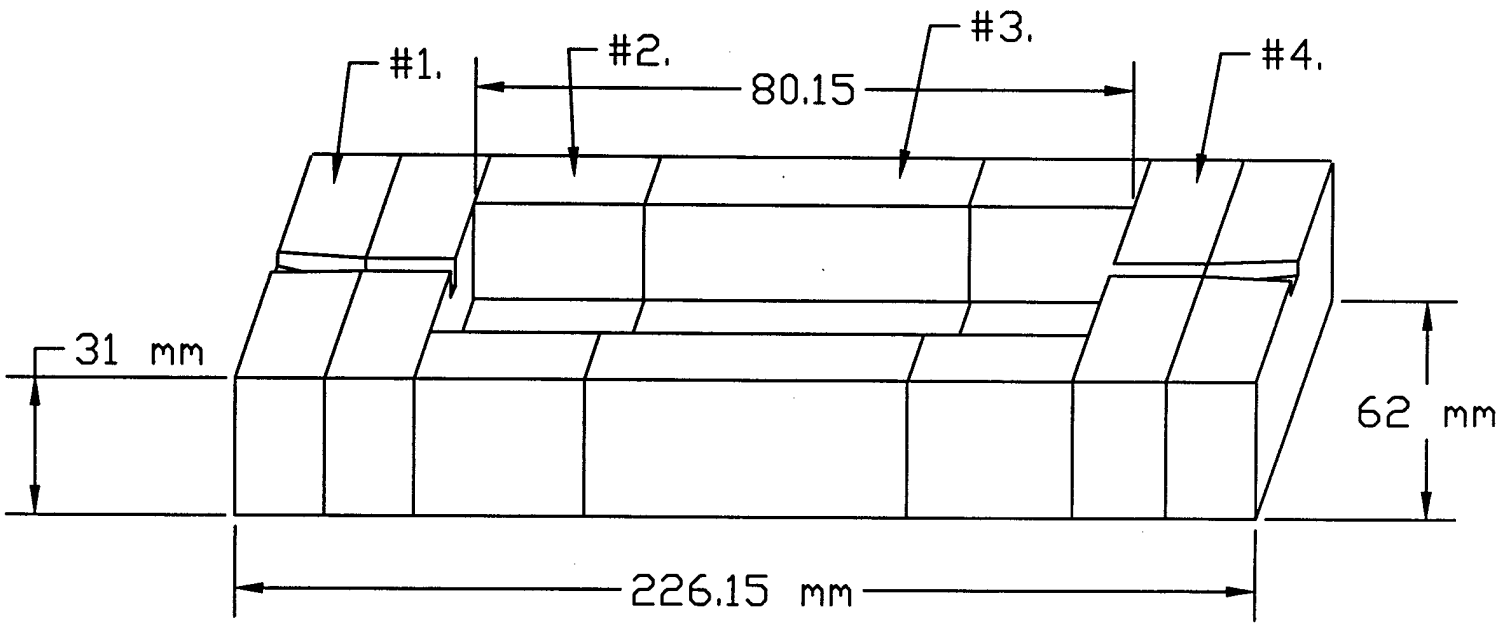

4. Square Region
3. Additional Region
2. MMI Region
1. Horn Region

No.	Notes
	SHOP TOLERANCES
	.XXX = +/- 0.0015"

TCU Engineering-Waveguide		
Drawn by: SP	Approved by:	Rev. by: SP
Material: Brass	Revision Number: 1	Revision Date: 07/29/98
Part Description: Prospective View		Drawing Number: 0

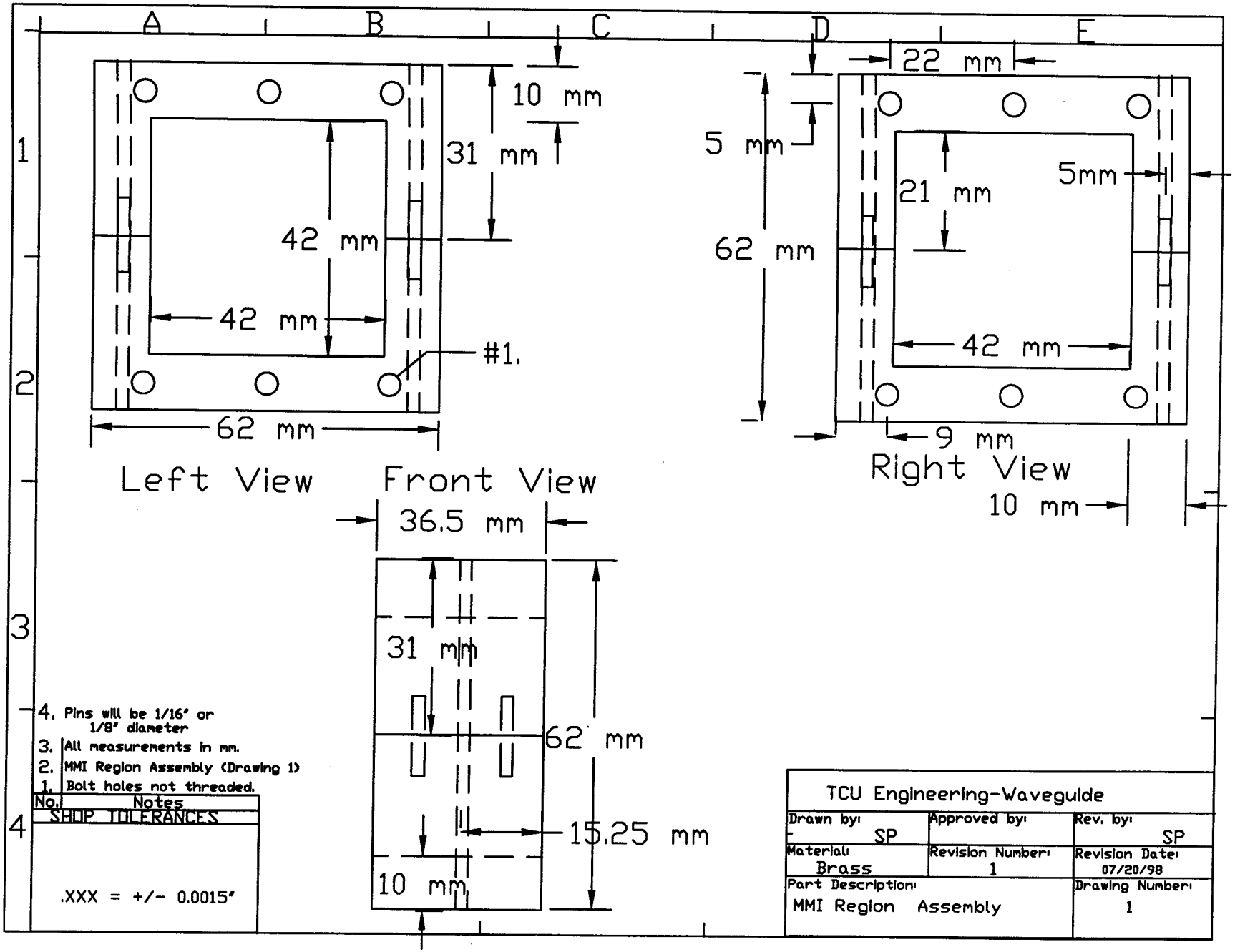
A
B
C
D
E
1
2
3
4
10 mm
31 mm
42 mm
42 mm
#1.
62 mm
Left View
Front View
22 mm
5 mm
62 mm
21 mm
5mm
42 mm
9 mm
Right View
10 mm
36.5 mm
31 mm
62 mm
15.25 mm
10 mm
4. Pins will be 1/16" or 1/8" diameter
3. All measurements in mm.
2. MMI Region Assembly (Drawing 1)
1. Bolt holes not threaded.
No. Notes
SHOP TOLERANCES
.XXX = +/- 0.0015"
TCU Engineering-Waveguide
Drawn by: SP
Approved by:
Rev. by: SP
Material: Brass
Revision Number: 1
Revision Date: 07/20/98
Part Description: MMI Region Assembly
Drawing Number: 1

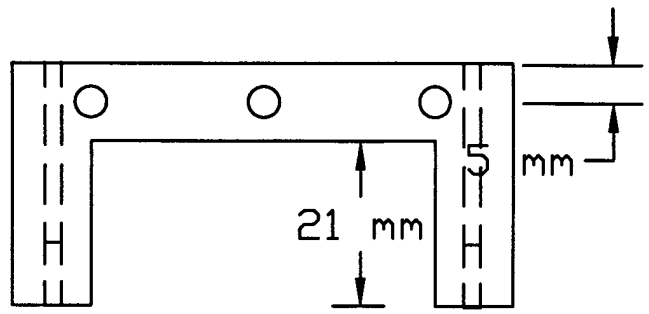

Left View

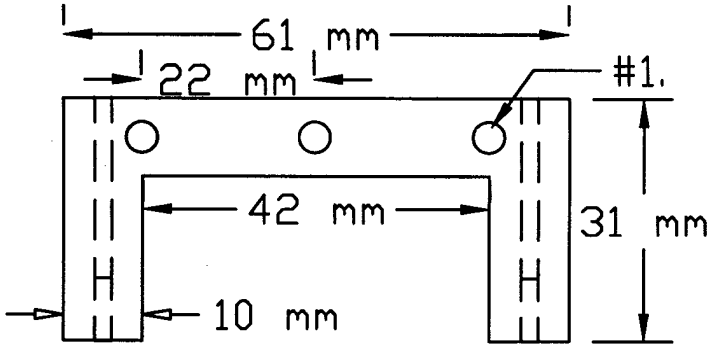

Right View

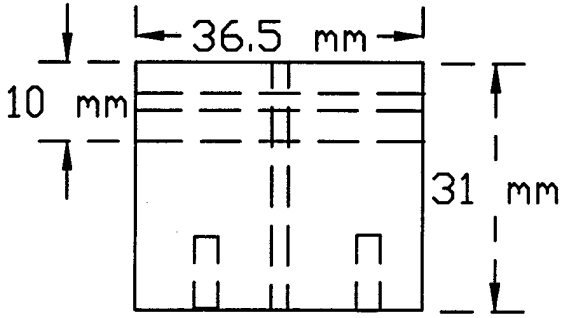

Front View

3. Pins will be 1/16" or 1/8" diameter
2. Measured in mm.
1. Bolt holes not threaded

No.	Notes
	SHOP TOLERANCES
	.XXX = +/- 0.0015"

TCU Engineering-Waveguide		
Drawn by: SP	Approved by:	Rev. by: SP
Material: Brass	Revision Number: 1	Revision Date: 07/20/98
Part Description: MMI Region Part (8)		Drawing Number: 2

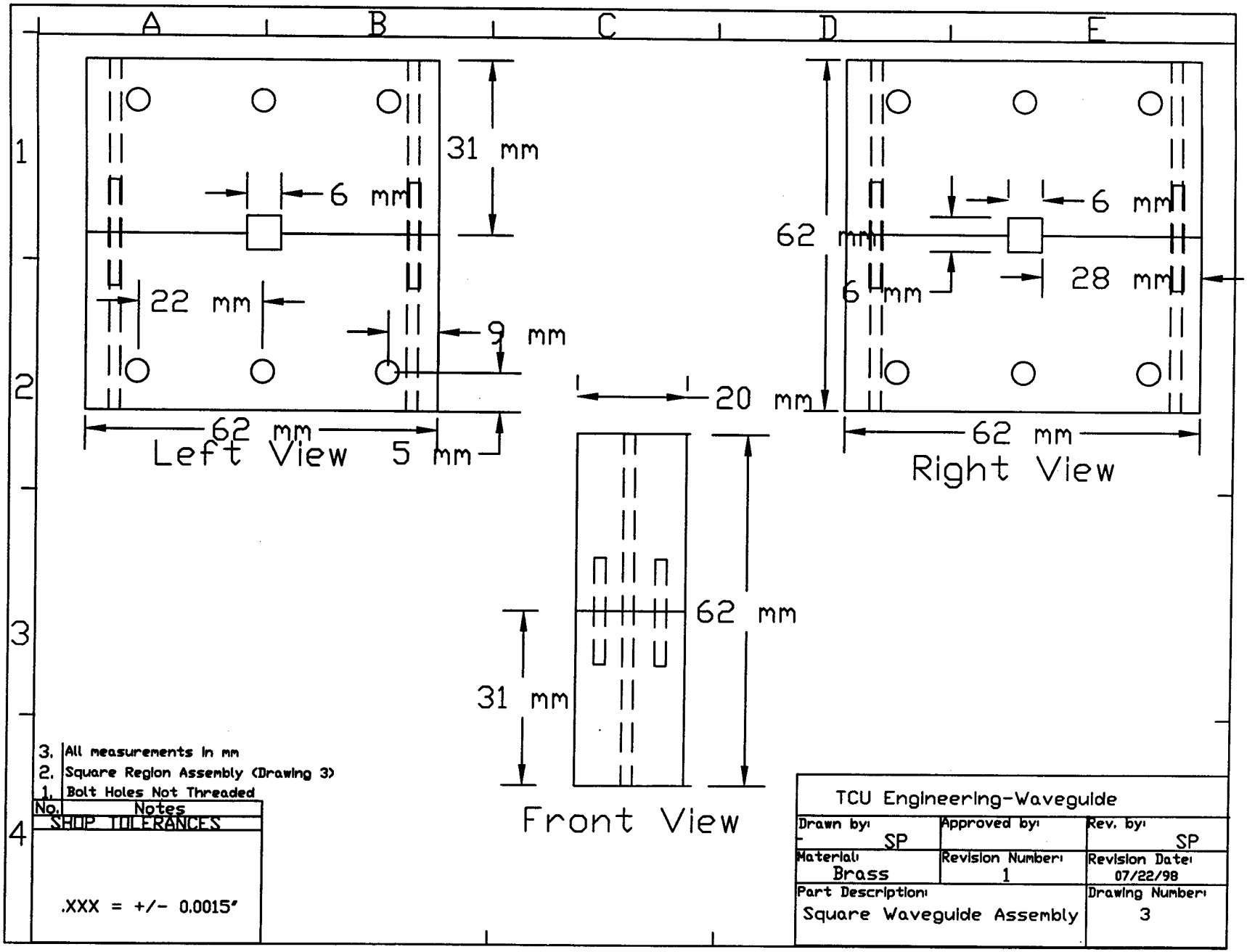
A
B
C
D
E
1
2
3
4
31 mm
6 mm
22 mm
9 mm
62 mm
5 mm
Left View
20 mm
62 mm
6 mm
6 mm
28 mm
62 mm
Right View
62 mm
31 mm
Front View
3. All measurements in mm
2. Square Region Assembly (Drawing 3)
1. Bolt Holes Not Threaded
No. Notes
SHOP TOLERANCES
.XXX = +/- 0.0015"
TCU Engineering-Waveguide
Drawn by: SP
Approved by:
Rev. by: SP
Material: Brass
Revision Number: 1
Revision Date: 07/22/98
Part Description: Square Waveguide Assembly
Drawing Number: 3

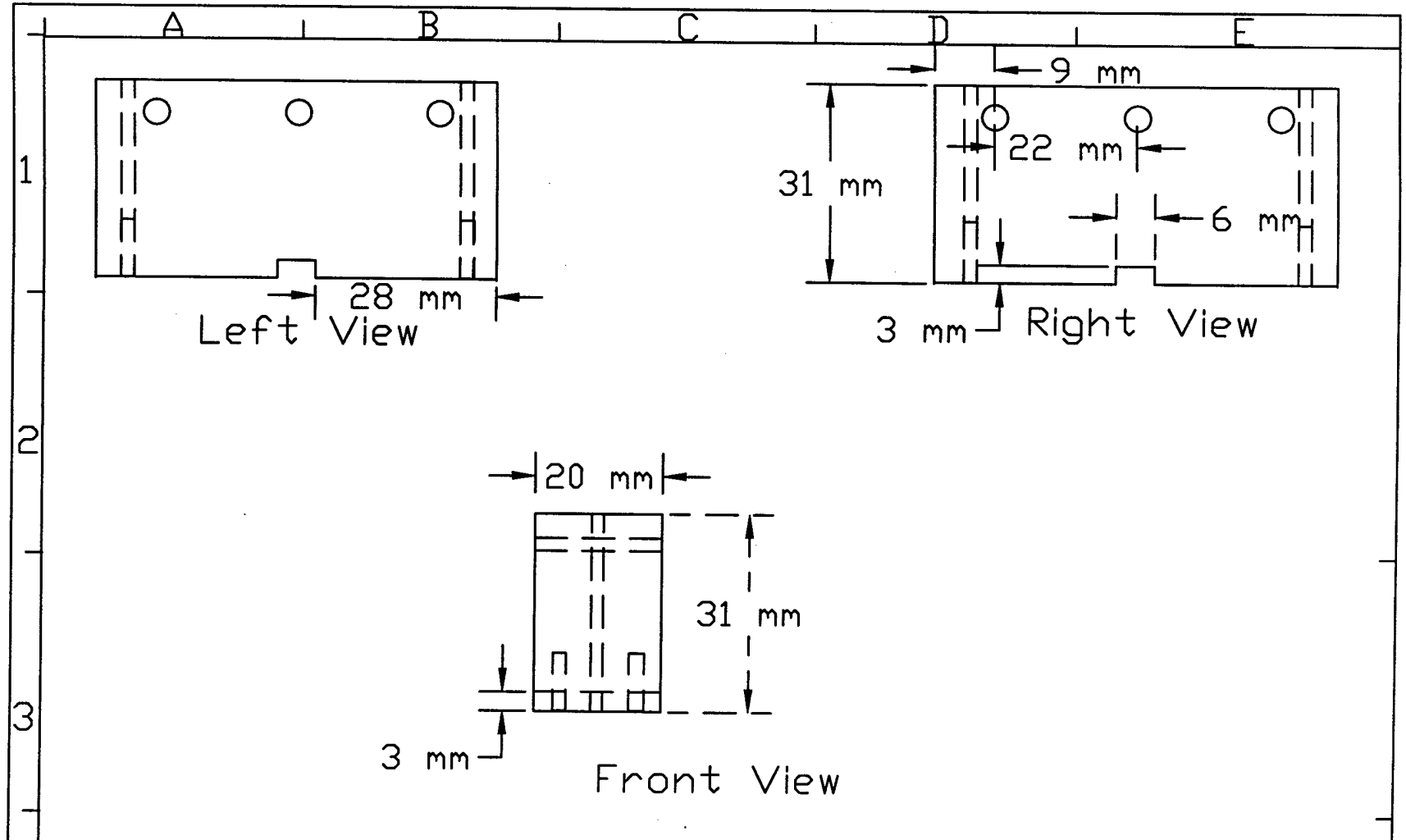

3. All measurements in mm
2. Pins will be 1/16" or 1/8"
1. Bolt holes not threaded

No.	Notes
	SHOP TOLERANCES
	.XXX = +/- 0.0015"

TCU Engineering-Waveguide		
Drawn by: SP	Approved by:	Rev. by: SP
Material: Brass	Revision Number: 1	Revision Date: 07/20/98
Part Description: Square Waveguide Part (8)		Drawing Number: 4

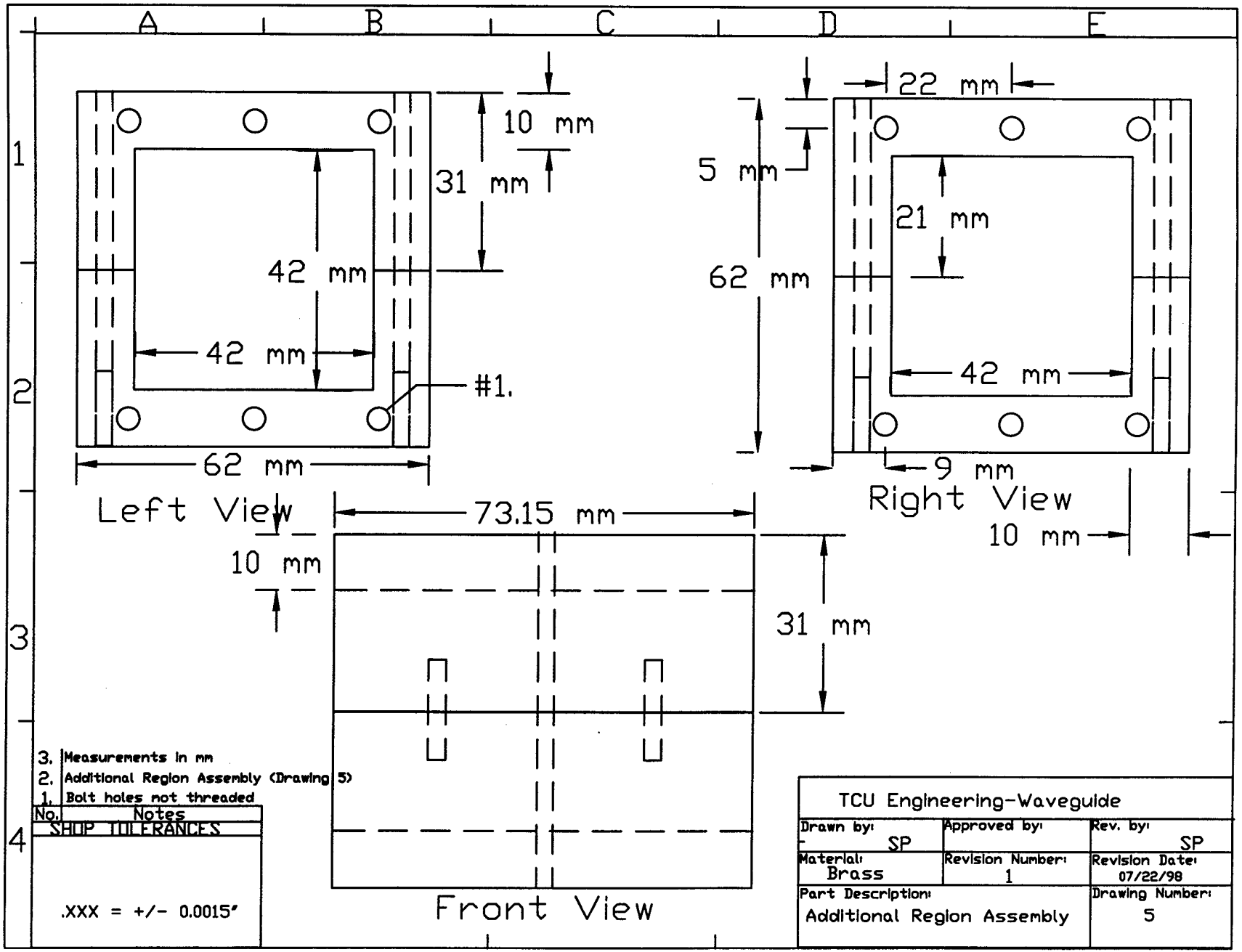
A
B
C
D
E
1
2
3
4
10 mm
31 mm
42 mm
42 mm
#1.
62 mm
Left View
22 mm
5 mm
62 mm
21 mm
42 mm
9 mm
Right View
10 mm
73.15 mm
10 mm
31 mm
Front View
3. Measurements in mm
2. Additional Region Assembly (Drawing 5)
1. Bolt holes not threaded
No. Notes
SHOP TOLERANCES
.XXX = +/- 0.0015"
TCU Engineering-Waveguide
Drawn by: SP
Approved by:
Rev. by: SP
Material: Brass
Revision Number: 1
Revision Date: 07/22/98
Part Description: Additional Region Assembly
Drawing Number: 5

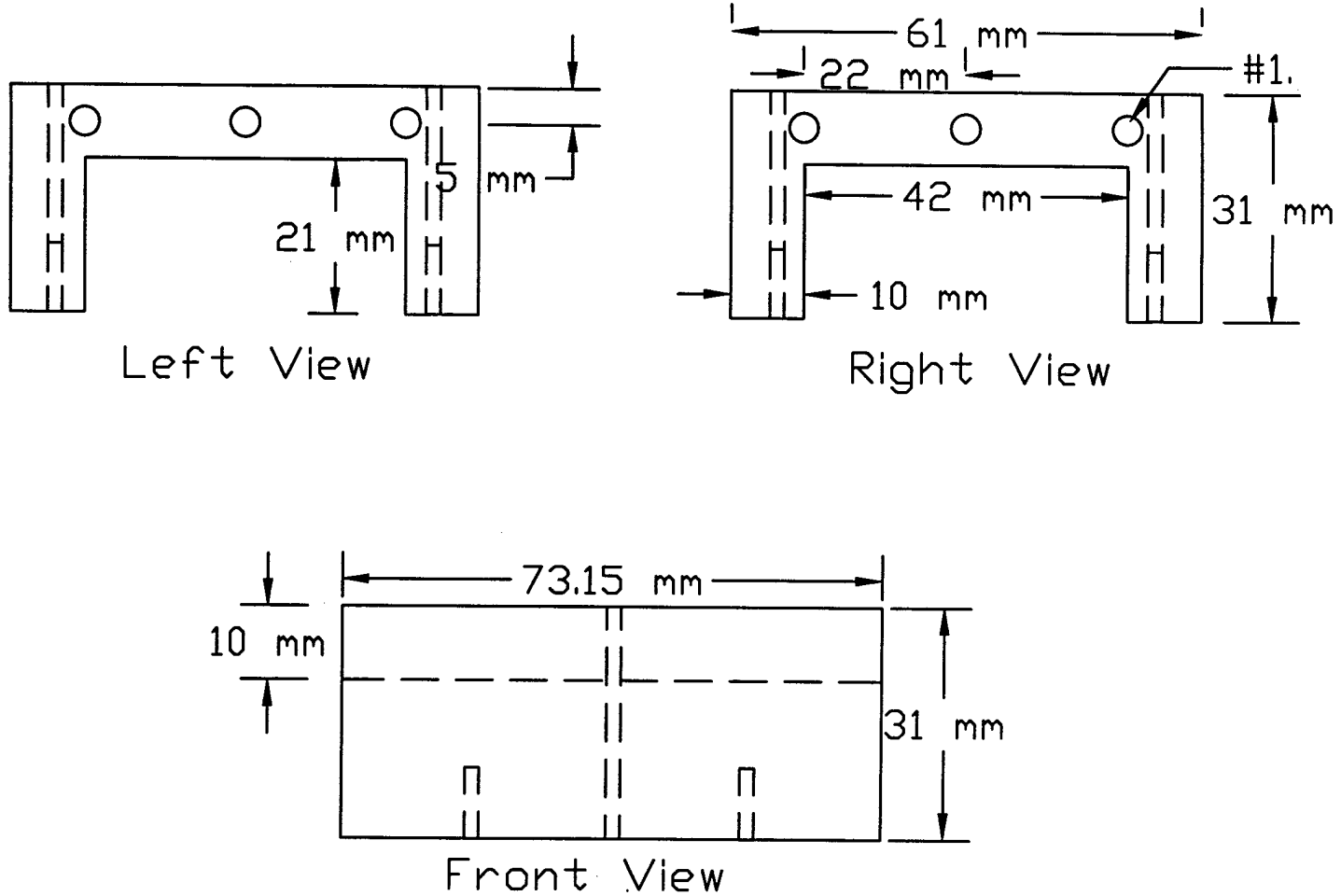

3. All measurements in mm
2. Pins will be 1/16" or 1/8" diameters
1. Bolt Holes Not Threaded

No.	Notes
	SHOP TOLERANCES
	.XXX = +/- 0.0015"

TCU Engineering-Waveguide		
Drawn by: SP	Approved by:	Rev. by: SP
Material: Brass	Revision Number: 1	Revision Date: 07/20/98
Part Description: Additional Region Part (4)		Drawing Number: 6

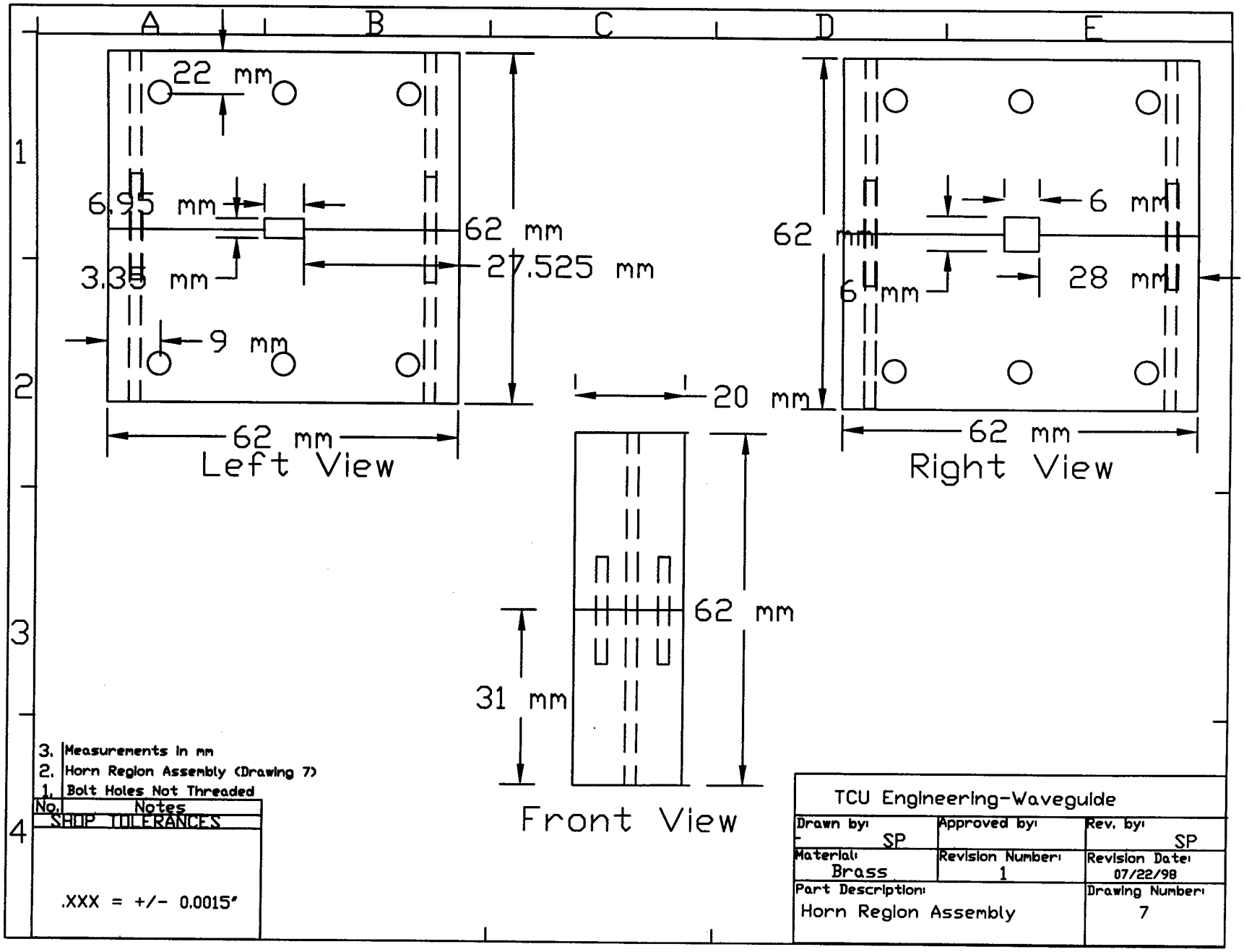
A
B
C
D
E
1
2
3
4
22 mm
6.95 mm
3.35 mm
9 mm
62 mm
27.525 mm
62 mm
Left View
20 mm
62 mm
31 mm
Front View
62 mm
6 mm
6 mm
28 mm
62 mm
Right View
3. Measurements in mm
2. Horn Region Assembly (Drawing 7)
1. Bolt Holes Not Threaded
No. Notes
SHOP TOLERANCES
.XXX = +/- 0.0015"
TCU Engineering-Waveguide
Drawn by: SP
Approved by:
Rev. by: SP
Material: Brass
Revision Number: 1
Revision Date: 07/22/98
Part Description: Horn Region Assembly
Drawing Number: 7

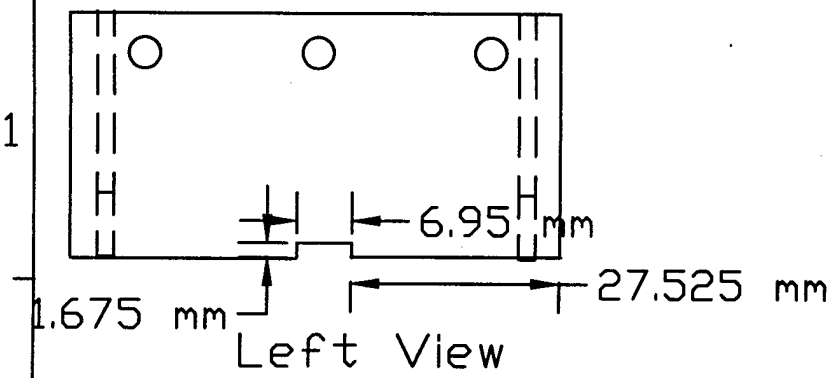

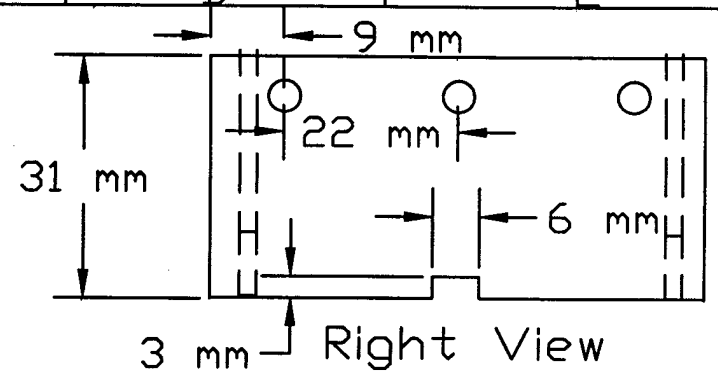

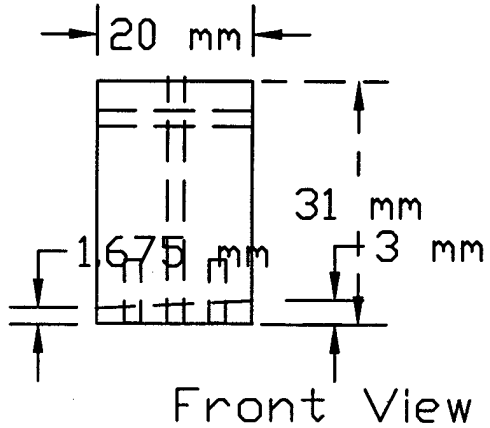

3. Pins will have 1/16" or 1/8" diameter
2. All measurements in mm
1. Bolt hoes not threaded

No.	Notes
	SHOP TOLERANCES
	.XXX = +/- 0.0015"

TCU Engineering-Waveguide		
Drawn by: SP	Approved by:	Rev. by: SP
Material: Brass	Revision Number: 1	Revision Date: 07/20/98
Part Description: Horn Region Part (8)		Drawing Number: 8