T.N. 1585

NATIONAL ADVISORY COMMITTEE FOR AERONAUTICS

TECHNICAL NOTE

No. 1585

THEORETICAL DISTRIBUTION OF LIFT ON THIN WINGS AT SUPERSONIC SPEEDS (AN EXTENSION)

By John C. Evvard

Flight Propulsion Research Laboratory
Cleveland, Ohio

Washington
May 1948

NATIONAL ADVISORY COMMITTEE FOR AERONAUTICS

TECHNICAL NOTE NO. 1585

THEORETICAL DISTRIBUTION OF LIFT ON THIN WINGS AT SUPERSONIC SPEEDS (AN EXTENSION)

By John C. Evvard

SUMMARY

A derivation is presented of a point-source method based on the linearized theory for obtaining the pressure coefficient on thin wings at supersonic speeds. The method is applied to calculate the lift distribution of a thin flat-plate wing having a straight leading edge and an arbitrarily curved wing tip whose elements are swept behind the Mach angle. A qualitative basis for obtaining solutions that satisfy the Kutta-Joukowski condition is included.

The analysis is continued to formulate the velocity potential for regions influenced by so-called subsonic trailing edges (that is, edges where the component of the free-stream velocity normal to the trailing edge is subsonic). The derivations include the solution that satisfies the Kutta-Joukowski condition or any of the infinite number of transition solutions involving a discontinuity in the cross velocity (sidewash) in the wake of a subsonic trailing edge. As an example, the two perturbation-velocity components in the plane of a trapezoidal wing and the upwash over the wing tip are evaluated. By means of series expansions, the mathematical nature of the lift distribution in regions influenced by arbitrary subsonic trailing edges is indicated when the Kutta-Joukowski or some other condition is applied to make the solution unique.

INTRODUCTION

The problem of determining the lift distribution of arbitrary thin wings at supersonic speeds has been partly solved by use of the linearized theory in references 1 and 2. In reference 1, the point-source method of reference 3 is extended to include the effective sources generated by the slopes of the streamlines in the region between the wing boundaries and the foremost Mach waves.

The velocity potential and hence the aerodynamic coefficients in the vicinity of wing tips at supersonic speeds can then be calculated. An explicit solution for the slopes of the streamlines in the region included between the wing boundaries and the foremost Mach waves is presented in reference 2. This solution allows the methods of reference 1 to be extended to include the calculation of the velocity potential at points on the wing influenced by interacting external flow fields.

In subsonic aerodynamic theory, an infinite number of solutions will satisfy the boundary conditions for a given wing. Some criterion is then required to choose from the manifold of solutions the one that is experienced in practice. A criterion that yields theoretical results in approximate agreement with experiment is the Kutta-Joukowski condition. This condition requires that the streamlines leave the trailing edge of the airfoil smoothly (that is, that the three components of the perturbation velocity are continuous across the trailing-edge boundary).

When the flow is supersonic, the Kutta-Joukowski condition need not be fulfilled at the trailing edge of the airfoil. Localized compression and expansion waves equalize the pressures from the bottom and top surfaces behind the trailing edge. Nevertheless, because of the close similarity of supersonic and subsonic flow when the component of the free-stream velocity normal to the trailing edge is subsonic (the so-called subsonic trailing edge), a strong opinion among aerodynamicists is that the Kutta-Joukowski condition will also approximately hold at supersonic speeds.

As indicated in reference 2, the formulations of reference 1 may be extended to include solutions that satisfy the Kutta-Joukowski condition. The extension shows that in supersonic-flow theory, as in subsonic-flow theory, an infinity of solutions can exist for a given wing boundary. Some additional criterion is then required. For subsonic leading edges, the added boundary condition applied in reference 1 is that the perturbation-velocity components shall be continuous in the region between the wing boundary and the foremost Mach waves. The solutions so obtained do not satisfy the Kutta-Joukowski condition for regions influenced by subsonic trailing edges. If a discontinuity in the cross-velocity component (sidewash in the plane of the wing) is permitted (corresponding to the shedding of a vortex sheet), solutions may be obtained that satisfy the Kutta-Joukowski condition or any transition solution depending upon the assumed strength of the discontinuity in the cross velocity. The particular criterion to be used can be determined only by experiment.

A derivation based on linearized theory is presented in the first part of this report to show that the theoretical pressure distribution on thin wings at supersonic speeds may be obtained from a line integral and a surface integral. (A line source was applied in reference 4 to obtain the pressure distribution at zero lift.) For thin flat-plate wings or for the lift distribution on finite-thickness wings, only line integrals are required. As an example, the lift distribution is evaluated for a wing having a straight leading edge intersected by an arbitrarily shaped curve whose boundary-line elements are swept behind the Mach line from the wing-tip and leading-edge intersection. The second part of the report formulates the expressions for the velocity potential in regions influenced by subsonic trailing edges.

Examples of these methods are presented. The solution satisfying the Kutta-Joukowski condition is derived for a swept trapezoidal wing. Sidewash and upwash velocities in the vicinity of the wing tip are also calculated. As a further application, by means of series expansions, the mathematical form of the lift distribution associated with the wake behind a general subsonic trailing edge is indicated. When this result is combined with the line integrals in the first part of the report, expressions are obtained for the lift distribution of arbitrary-plan-boundary single wing tips at supersonic speeds. The Kutta-Joukowski and other conditions are applied to formulate feasible solutions for the various wing areas. The research was conducted at the NACA Cleveland laboratory during August and September 1947.

ANALYSIS

Point-Source Method for Evaluating Pressure Coefficient

A convenient approach toward evaluating the pressure coefficient on thin finite wings at supersonic speeds is to establish the velocity potential. A point-source integral expression for the velocity potential at any point on thin wings at supersonic speeds is given in references 1 and 3 as

$$\varphi = -\frac{U}{\pi}\iint_S \frac{\sigma d\xi d\eta}{\sqrt{(x-\xi)^2-\beta^2(y-\eta)^2}} \tag{1}$$

where here

φ perturbation-velocity potential on top wing surface

U free-stream velocity considered parallel to x or ξ axis

σ slope of streamlines near x,y plane measured in y = constant planes

ξ, η Cartesian variables of integration, x and y directions, respectively 886

x,y Cartesian coordinates of point where φ is evaluated

$\beta = \sqrt{M^2-1}$

M free-stream Mach number

(A complete list of symbols used in this report is presented in appendix A.) In equation (1), the integration of σ is conducted in the x,y plane for the disturbed flow field S included in the forward Mach cone from the point (x,y). For example, the integration for the wing shown in figure 1(a) is over the area S_W. In regions influenced by a wing tip, the disturbed flow area between the wing boundary and the foremost Mach line must also be included.

If the velocity potential is computed at a point $(x+dx,y)$, as in figure 1(b), the area enclosed by the curve efgc' is the same as the area abdc and the relation of the distances in the denominator of the integrand is the same as was considered at point (x,y). The slopes, however, will have the value $\sigma + \frac{\partial\sigma}{\partial\xi}dx$. In addition, the area a'bd'gfe will contribute to the velocity potential. The value of φ then becomes

$$\varphi + \frac{\partial\varphi}{\partial x}dx = -\frac{U}{\pi}\iint_S \frac{\left(\sigma + \frac{\partial\sigma}{\partial\xi}dx\right)d\xi d\eta}{\sqrt{(x-\xi)^2-\beta^2(y-\eta)^2}}$$

$$-\frac{U}{\pi}\iint_{\xi_1}^{\xi_1+dx} \frac{\sigma d\eta d\xi}{\sqrt{(x-\xi)^2-\beta^2(y-\eta)^2}} \qquad (2)$$

where ξ_1 is the value of ξ along the leading edge. Integration yields

$$\varphi + \frac{\partial\varphi}{\partial x}\,dx = -\frac{U}{\pi}\iint_S \frac{\left(\sigma + \frac{\partial\sigma}{\partial\xi}\,dx\right)d\xi\,d\eta}{\sqrt{(x-\xi)^2-\beta^2(y-\eta)^2}}$$

$$-\frac{U}{\pi}\int_{abd} \frac{\sigma\,d\eta\,dx}{\sqrt{(x-\xi)^2-\beta^2(y-\eta)^2}} \tag{2a}$$

where abd represents the path of integration. Subtraction of equation (1) from equation (2a) gives

$$\frac{\partial\varphi}{\partial x} = -\frac{U}{\pi}\iint_S \frac{\frac{\partial\sigma}{\partial\xi}d\xi\,d\eta}{\sqrt{(x-\xi)^2-\beta^2(y-\eta)^2}}$$

$$-\frac{U}{\pi}\int_{abd} \frac{\sigma\,d\eta}{\sqrt{(x-\xi)^2-\beta^2(y-\eta)^2}} \tag{3}$$

where ξ and σ are evaluated in the line integral as functions of η along the line abd of figure 1(a).

The x component of the perturbation velocity may then be computed as the surface integral of the rate of change of the streamline slopes with respect to ξ plus a line integral along the foremost boundary of the disturbed flow field included in the forward Mach cone from the point (x,y). The surface integral, of course, vanishes in regions where σ is constant. (Evaluation of the surface integral along lines of discontinuous $\frac{\partial\sigma}{\partial\xi}$ results in additional line integrals.)

For some problems, the integrations of equation (3) may be more easily evaluated in a set of oblique coordinates (u,v) whose axes lie parallel to the Mach lines. The transformation equations are

886

$$\left.\begin{aligned}
u &= \frac{M}{2\beta}(\xi-\beta\eta) & v &= \frac{M}{2\beta}(\xi+\beta\eta) \\
\xi &= \frac{\beta}{M}(v+u) & \eta &= \frac{1}{M}(v-u) \\
u_w &= \frac{M}{2\beta}(x-\beta y) & v_w &= \frac{M}{2\beta}(x+\beta y) \\
x &= \frac{\beta}{M}(v_w+u_w) & y &= \frac{1}{M}(v_w-u_w)
\end{aligned}\right\} \tag{4}$$

Inasmuch as the elemental area in the (u,v) coordinate system is $\frac{2\beta}{M^2}dudv$, equation (3) may be written as

$$\frac{\partial\varphi}{\partial x} = -\frac{U}{2\beta\pi}\iint_S \frac{\left(\frac{\partial\sigma}{\partial u}+\frac{\partial\sigma}{\partial v}\right)dudv}{\sqrt{(u_w-u)(v_w-v)}}$$

$$-\frac{U}{2\beta\pi}\int_{abd} \frac{\sigma(dv-du)}{\sqrt{(u_w-u)(v_w-v)}} \tag{3a}$$

where (u_w,v_w) corresponds to the point (x,y) and the evaluation of the line integral is again conducted along the foremost line of disturbances included in the forward Mach cone.

When only one wing tip is included in the forward Mach cone from the point, the surface integral over the area S_D (fig. 2(a)) generated by the upwash over the wing tip may be replaced by an equivalent integration over a portion of the wing. This simplification, which follows from the derivations of reference 1, eliminates the necessity of evaluating the slopes of the streamlines in the external flow field S_D. The velocity potential at point (u_w,v_w) on the wing of figure 2(a) is obtained from reference 1 as

$$\varphi = -\frac{U}{M\pi}\iint_{S_{w,1}} \frac{\sigma_T dudv}{\sqrt{(u_w-u)(v_w-v)}}$$

$$-\frac{U}{M\pi}\iint_{S_{w,2}} \frac{(\sigma_B+\sigma_T)dudv}{2\sqrt{(u_w-u)(v_w-v)}} \tag{5}$$

where σ_B and σ_T are the bottom- and top-surface wing slopes, respectively.

Because evaluation of φ from equation (5) requires the application of separate sets of wing slopes in the respective regions $S_{w,1}$ and $S_{w,2}$, the calculation of $\frac{\partial\varphi}{\partial x}$ will result in a line integral along the dividing boundary. The derivation presented in appendix B then yields equation (6).

$$\frac{\partial\varphi}{\partial x} = -\frac{U}{2\beta\pi}\iint_{S_{w,1}} \frac{\left(\frac{\partial\sigma_T}{\partial u}+\frac{\partial\sigma_T}{\partial v}\right)du\,dv}{\sqrt{(u_w-u)(v_w-v)}}$$

$$-\frac{U}{4\beta\pi}\iint_{S_{w,2}} \frac{\frac{\partial(\sigma_B+\sigma_T)}{\partial u}+\frac{\partial(\sigma_B+\sigma_T)}{\partial v}}{\sqrt{(u_w-u)(v_w-v)}}\,du\,dv$$

$$-\frac{U}{2\beta\pi}\int_{ab} \frac{\sigma_T(dv-du)}{\sqrt{(u_w-u)(v_w-v)}} - \frac{U}{2\beta\pi}\int_{bod} \frac{(\sigma_B+\sigma_T)(dv-du)}{2\sqrt{(u_w-u)(v_w-v)}}$$

$$-\frac{U}{2\beta\pi}\int_{bd} \frac{(\sigma_T-\sigma_B)\left[1-\frac{du_2(v_w)}{dv_w}\right]dv}{2\sqrt{(u_w-u)(v_w-v)}} \tag{6}$$

where $\frac{du_2(v_w)}{dv_w}$ is the derivative of the wing-boundary curve $u = u_2(v)$ at $v = v_w$.

In order to obtain the lift distribution as a function of angle of attack α, only the solution for a thin flat plate is required. Because $\sigma_B = -\sigma_T = \alpha$, only the two line integrals along the curves ab and bd remain. The portion of the equation (6) that yields the lift distribution is then

$$\frac{\partial\varphi}{\partial x} = -\frac{U}{2\beta\pi}\int_{ab}\frac{-\alpha\,(dv-du)}{\sqrt{(u_w-u)(v_w-v)}} - \frac{U}{2\beta\pi}\int_{bd}\frac{-\alpha\left(1-\frac{du_2}{dv_w}\right)dv}{\sqrt{(u_w-u)(v_w-v)}} \tag{7}$$

If the equations of the wing boundaries (fig. 2(b)) on the two branches separated by the origin are denoted by

$$v = v_1(u) \qquad \text{or} \qquad u = u_1(v)$$

and

$$v = v_2(u) \qquad \text{or} \qquad u = u_2(v)$$

equation (7) may be partly evaluated to yield

$$\frac{\partial\varphi}{\partial x} = \frac{U\alpha}{2\beta\pi}\int_{ab}\frac{(dv-du)}{\sqrt{(u_w-u)(v_w-v)}} + \frac{U\alpha}{\beta\pi}\left[1-\frac{du_2(v_w)}{dv_w}\right]\sqrt{\frac{v_w-v_1(u_2(v_w))}{u_w-u_2(v_w)}} \tag{7a}$$

where v_1 is a function of $u_2(v_w)$. The expression for $\frac{\partial\varphi}{\partial x}$ represented by equation (7a) is applied in the second part of this report to derive solutions for the lift distribution that satisfy the Kutta-Joukowski condition for general-plan-form single-wing-tip boundaries.

As an illustration of equation (7a), the pressure coefficient on the top wing surface as given by the relation

$$C_p = -\frac{2}{U}\frac{\partial\varphi}{\partial x} \tag{8}$$

will be calculated for the wing shown in figure 3.

Inasmuch as the leading edge and the wing tip satisfy the equations $v = -k_1 u$ and $u = u_2(v)$, the integral of equation (7a) becomes

$$-\frac{U\alpha}{2\beta\pi}\int_{u_w}^{u_2(v_w)} \frac{(1+k_1)du}{\sqrt{(u_w-u)(v_w+k_1u)}} = \frac{U\alpha}{\beta\pi}\frac{(k_1+1)}{\sqrt{k_1}}\tan^{-1}\sqrt{\frac{k_1\left[u_w-u_2(v_w)\right]}{v_w+k_1u_2(v_w)}} \tag{9}$$

and

$$\frac{U\alpha}{\beta\pi}\left[1-\frac{du_2(v_w)}{dv_w}\right]\sqrt{\frac{v_w-v_1(u_2(v_w))}{u_w-u_2(v_w)}} = \frac{U\alpha}{\beta\pi}\left[1-\frac{du_2(v_w)}{dv_w}\right]\sqrt{\frac{v_w+k_1u_2(v_w)}{u_w-u_2(v_w)}} \tag{10}$$

The value of C_p is then given as

$$C_p = -\frac{2\alpha}{\beta\pi}\left\{\left[1-\frac{du_2(v_w)}{dv_w}\right]\sqrt{\frac{v_w+k_1u_2(v_w)}{u_w-u_2(v_w)}} + \frac{k_1+1}{\sqrt{k_1}}\tan^{-1}\sqrt{\frac{k_1\left[u_w-u_2(v_w)\right]}{v_w+k_1u_2(v_w)}}\right\} \tag{11}$$

For comparison, equation (11) is also derived in appendix C as equation (C4) by the method of reference 1.

Equation (11) shows that the pressure coefficient assumes the Ackeret value for a swept wing along the innermost Mach line from the origin ($v_w = 0$) and approaches infinity along the subsonic leading edge of the wing tip. The portion of the solution that gives the infinity (that is, equation (10)) is generated by the line integral along the Mach line bd in equation (7). This quantity is zero when the sweep on the wing tip is $\frac{\pi}{2}$ or $\frac{du_2(v_w)}{dv_w} = 1$. A change in sign occurs when $\frac{du_2}{dv_w} > 1$ (regions influenced by subsonic trailing edges) in equation (10), which leads to a reversal of sign in the pressure coefficient over a portion of the top wing surface. This pressure reversal leads to lost lift and, because of trailing-edge suction, to decreased lift-drag ratio as compared with the solution that satisfies the Kutta-Joukowski condition.

The pressure coefficient that satisfies the Kutta-Joukowski condition along the subsonic trailing edge must match the solution given

in equation (11) along the constant-v_w line evaluated by the relation $\frac{du_2}{dv_w} = 1$. The pressure coefficient must furthermore be zero along the subsonic trailing edge. A function that meets both of these requirements is

$$C_p = -\frac{2\alpha}{\beta\pi}\frac{(k_1+1)}{\sqrt{k_1}}\tan^{-1}\sqrt{\frac{k_1\left[u_w-u_2(v_w)\right]}{v_w+k_1u_2(v_w)}} \tag{12}$$

The wake from the subsonic trailing edge alters the lift distribution over a portion of the wing in such a manner that the discontinuous term in equation (11) is canceled. In the second part of this report, equation (12) is shown to be the correct solution for the pressure coefficient in regions influenced by subsonic trailing edges of a wing whose leading edge is straight (fig. 3) when the Kutta-Joukowski condition is to apply.

Formulation of Velocity Potential Including Effects Associated with Wake behind Subsonic Trailing Edge

In order to clarify the present discussion, a brief review of the concepts presented in reference 1 is included. The calculation of the velocity potential at some point on the surface of thin wings at supersonic speeds requires a knowledge of the streamline slopes (σ of equation (1)) included in the forward Mach cone from the point. The slopes of the streamlines over the area $S_{w(1+2)}$ (fig. 2(a)) are just the wing-section slopes. The slopes of the streamlines in the region S_D must then be calculated, either implicitly or explicitly.

The slopes of the streamlines in the region S_D may be evaluated by assuming that a thin impermeable diaphragm coincides with a stream sheet in the plane of the wing. This assumption does not alter the flow over the wing. The diaphragm may then be regarded as an extension of the wing to isolate the top and bottom surfaces.

The coincidence of the diaphragm with a stream sheet requires that no pressure difference exist between its top and bottom surfaces. This condition may be satisfied by requiring either that the surface velocity potential be continuous in passing from the top

886

to the bottom surface of the diaphragm, as in reference 1, or that the component of the perturbation velocity along the free-stream direction (the x component) be continuous.

If the x component of the perturbation velocity (obtained by differentiating the velocity potential) is equated on the top and bottom surfaces of the diaphragm, the defining equation for the slope λ of the stream sheet S_D (fig. 4(a)) is obtained as

$$\frac{\partial}{\partial x}\iint_{S_D} \frac{\lambda(\xi,\eta)d\xi d\eta}{\sqrt{(x-\xi)^2-\beta^2(y-\eta)^2}} = \frac{\partial}{\partial x}\iint_{S_W} \frac{(\sigma_B-\sigma_T)d\xi d\eta}{2\sqrt{(x-\xi)^2-\beta^2(y-\eta)^2}} \tag{13}$$

Integration of equation (13) yields

$$\iint_{S_D} \frac{\lambda(\xi,\eta)d\xi d\eta}{\sqrt{(x-\xi)^2-\beta^2(y-\eta)^2}} = \iint_{S_W} \frac{(\sigma_B-\sigma_T)}{2} \frac{d\xi d\eta}{\sqrt{(x-\xi)^2-\beta^2(y-\eta)^2}} - \frac{\pi}{U} f(y) \tag{14}$$

If the function $f(y)$ that results from the partial integration is zero, the equation derived in reference 1 for defining λ is obtained.

A calculation of the velocity potential on the top surface of the diaphragm for any value of the function $f(y)$ may be made. Again with reference to figure 4(a), the velocity potential becomes

$$\varphi = -\frac{U}{\pi}\iint_{S_W} \frac{\sigma_T d\xi d\eta}{\sqrt{(x-\xi)^2-\beta^2(y-\eta)^2}} - \frac{U}{\pi}\iint_{S_D} \frac{\lambda d\xi d\eta}{\sqrt{(x-\xi)^2-\beta^2(y-\eta)^2}} \tag{15}$$

Substitution of equation (14) into equation (15) yields

$$\varphi = -\frac{U}{\pi}\iint_{S_W} \frac{(\sigma_B+\sigma_T)d\xi d\eta}{2\sqrt{(x-\xi)^2-\beta^2(y-\eta)^2}} + f(y) \tag{16}$$

A similar calculation of the potential on the bottom surface of the diaphragm changes only the sign affixed to $f(y)$. The function $f(y)$ thus represents one-half the difference in potential between the top and bottom surfaces of the diaphragm. In the case of thin plate wings, $\sigma_B+\sigma_T = 0$ and $f(y)$ is the potential on the top surface of the diaphragm.

Despite a discontinuity in the velocity potential across the diaphragm, the x and z components of the perturbation velocity are continuous. This apparently contradictory state of affairs may be rationalized by the presence of a vortex sheet in the plane of the wing. The strength of the vortex sheet may be chosen (by controlling $f(y)$) to yield solutions for the velocity potential that satisfy the Kutta-Joukowski condition for subsonic trailing edges.

The function $f(y)$ is related to the strength of the vortex sheet. If no wing nor material object is intercepted (for the values of y under consideration) to generate a wake, the strength of $f(y)$ remains unaltered for all values of x.

In the equations that follow, two simplifications are introduced: (1) all the derivations are conducted in the oblique coordinate system, and (2) the derivations consider only thin flat-plate wings. Neither simplification decreases the generality of the solution. The results for the actual wing at angle of attack may be evaluated as the sum of the results at zero angle of attack and the solution at angle of attack for the thin flat plate of the same plan form.

The external flow field may be divided into two parts (as in fig. 4(b)), separated by the value of y that denotes the junction between the leading and trailing edge. The foremost Mach line originating on the leading edge generally represents a line of infinitesimal disturbance along which $f(y)$ may be set equal to zero. The function $f(y)$ will remain zero for values of x that do not intercept the wing. The velocity potential (in the $z = 0$ plane) is thus zero in the field $S_{D,2}$. The field $S_{D,1}$, on the other hand, lies in the wake of the wing. In this region, $f(y)$ will generally be other than zero (corresponding to the generation of a vortex sheet) and may be evaluated along the wing trailing edge.

If the region $S_{D,1}$ is temporarily considered as a portion of the wing, the method of reference 1 may be applied to evaluate the potential on the top surface of the diaphragm $S_{D,1}$ or on the wing surface. The virtual wing tip is then the y = constant line

886

denoting the junction between the leading and trailing edges. Inasmuch as $f(y)$ is zero in the region $S_{D,2}$, the effects of this disturbed flow field may be evaluated by the methods of reference 1; equation (5) applied to the virtual wing boundary will result. When the flow fields are subdivided and renumbered, as on figure 4(c), the contribution to the velocity potential of the disturbed fields $S_{D(2+4+3)}$ and $S_{w,2}$ is given by equation (5) as

$$-\frac{U}{M\pi}\iint_{S_{w,2}} \frac{(\sigma_B+\sigma_T)dudv}{2\sqrt{(u_w-u)(v_w-v)}} - \frac{U}{M\pi}\iint_{S_{D,3}} \frac{(\lambda_3-\lambda_3)dudv}{2\sqrt{(u_w-u)(v_w-v)}} = 0$$

because $\sigma_B = -\sigma_T$. Only the slopes of the streamlines in the regions $S_{w,1}$ and $S_{D,1}$ need then be considered. The velocity potential thus becomes

$$f(y) = -\frac{U}{M\pi}\iint_{S_{w,1}} \frac{-\alpha dudv}{\sqrt{(u_D-u)(v_D-v)}}$$

$$-\frac{U}{M\pi}\iint_{S_{D,1}} \frac{\lambda dudv}{\sqrt{(u_D-u)(v_D-v)}} \tag{17}$$

The origin of the coordinates for the wing of figure 4(d) is placed at the junction of the subsonic leading and trailing edges. The wing boundaries are defined on the two sides of the origin by the two sets of equations:

$$v = v_1(u) \qquad \text{or} \qquad u = u_1(v)$$

$$v = v_2(u) \qquad \text{or} \qquad u = u_2(v)$$

(It will also be implicitly assumed that $\frac{du_2}{dv} > 1$.) Insertion of the limits of integration into equation (17) yields

$$f(y) = f\left(\frac{v_D-u_D}{M}\right) = -\frac{U}{M\pi}\int_{v_D}^{u_D} \frac{du}{\sqrt{u_D-u}}\left[\int_{v_1(u)}^{v_2(u)} \frac{-\alpha dv}{\sqrt{v_D-v}} + \int_{v_2(u)}^{v_D} \frac{\lambda dv}{\sqrt{v_D-v}}\right] \tag{18}$$

By use of Abel's solution (reference 2, 5, or 6), equation (18) may be inverted to yield

$$\left[\int_{v_1(u)}^{v_2(u)} \frac{-\alpha dv}{\sqrt{v_D-v}} + \int_{v_2(u)}^{v_D} \frac{\lambda dv}{\sqrt{v_D-v}}\right] = -\frac{M}{U}\frac{\partial}{\partial u}\int_{v_D}^{u} \frac{f(y)du_D}{\sqrt{u-u_D}} \tag{19}$$

The velocity potential at points on the wing influenced by the subsonic trailing edge (fig. 4(e)) is

$$\varphi = -\frac{U}{M\pi}\int_{v_w}^{u_2(v_w)} \frac{du}{\sqrt{u_w-u}}\left[\int_{v_1(u)}^{v_2(u)} \frac{-\alpha dv}{\sqrt{v_w-v}} + \int_{v_2(u)}^{v_w} \frac{\lambda dv}{\sqrt{v_w-v}}\right]$$

$$-\frac{U}{M\pi}\int_{u_2(v_w)}^{u_w} \frac{du}{\sqrt{u_w-u}}\int_{v_1(u)}^{v_w} \frac{-\alpha dv}{\sqrt{v_w-v}} \tag{20}$$

The second member of equation (19) may replace the first member along lines of constant v_D (or v_w) that extend across the wing. Equation (20) then becomes

$$\varphi = \frac{1}{\pi}\int_{v_w}^{u_2(v_w)} \frac{du}{\sqrt{u_w-u}}\left[\frac{\partial}{\partial u}\int_{v_D}^{u} \frac{f\left(\frac{v_D-u_D}{M}\right)du_D}{\sqrt{u-u_D}}\right]$$

$$-\frac{U}{M\pi}\int_{u_2(v_w)}^{u_w} \frac{du}{\sqrt{u_w-u}}\int_{v_1(u)}^{v_w} \frac{-\alpha dv}{\sqrt{v_w-v}} \tag{21}$$

Equation (21) gives the velocity potential on the wing in regions influenced by subsonic trailing edges. Inasmuch as $f(y) = f\left(\frac{v_D-u_D}{M}\right)$ may be arbitrarily chosen, it is apparent that an infinite number of solutions can satisfy the boundary conditions. If $f = 0$, equation (21) reduces to the result that would be obtained by the methods of reference 1. On the other hand, if the Kutta-Joukowski condition is to apply, the function f may be so chosen that the flow leaves the subsonic trailing edge smoothly.

After the function f has been chosen, the second member of equation (19) may be evaluated. The slopes of the streamlines λ may

then be calculated by use of Abel's equation. These slopes in general consist of two parts, $\lambda = \lambda_a + \lambda_b$, which satisfy the two equations

$$\int_{v_1(u)}^{v_2(u)} \frac{-\alpha dv}{\sqrt{v_D - v}} + \int_{v_2(u)}^{v_D} \frac{\lambda_b dv}{\sqrt{v_D - v}} = 0 \tag{22}$$

and

$$\int_{v_2(u)}^{v_D} \frac{\lambda_a dv}{\sqrt{v_D - v}} = -\frac{M}{U}\frac{\partial}{\partial u}\int_{v_D}^{u} \frac{f(y)du_D}{\sqrt{u - u_D}} \tag{23}$$

Equation (22) has been evaluated in reference 2 to give

$$\lambda_b = \frac{2\alpha}{\pi}\left[\sqrt{\frac{v_2(u) - v_1(u)}{v - v_2(u)}} - \tan^{-1}\sqrt{\frac{v_2(u) - v_1(u)}{v - v_2(u)}}\right] \tag{22a}$$

Equation (23) may be solved by Abel's equation (reference 2, 5, or 6) to give

$$\lambda_a = -\frac{M}{U\pi}\frac{\partial}{\partial v}\int_{v_2(u)}^{v} \frac{\left[\frac{\partial}{\partial u}\int_{v_D}^{u} \frac{f\left(\frac{v_D - u_D}{M}\right)du_D}{\sqrt{u - u_D}}\right]dv_D}{\sqrt{v - v_D}} \tag{23a}$$

In this manner, the slopes of the streamlines in the region $S_{D,1}$ of figure 4(b) may be evaluated. If the region $S_{D,1}$ is treated as a portion of the wing, the slopes of the streamlines in the region $S_{D,2}$ may be evaluated from the equations of reference 2.

Examples of Solutions That Satisfy Kutta-Joukowski Condition

Swept trapezoidal wing. - As a simple example, the theory of the trapezoidal wing shown in figure 5 will be outlined. The leading and trailing edges of the tip are defined by the equations $v = v_1(u) = -k_1 u$ and $v = v_2 u = k_2 u$, where $k_1 > 0$ and $0 < k_2 < 1$. Because the wing boundaries are straight lines, conical flow will be assumed.

Because conical flow has been assumed in the region influenced by the wing tip, the cross velocity $\frac{\partial f}{\partial y}$ must be either constant or a function of y/x. Because f is a function only of y, $\frac{\partial f}{\partial y} = \frac{df}{dy}$ is constant in the region $S_{D,1}$. The function $f(y)$ is then of the form $a_0 + a_1 y$ where a_0 and a_1 are constants. Inasmuch as $f(y)$ must be zero along the line $y = 0$, a_0 is zero. Equation (19) then becomes

$$\int_{-k_1 u}^{k_2 u} \frac{-\alpha dv}{\sqrt{v_D - v}} + \int_{k_2 u}^{v_D} \frac{\lambda\, dv}{\sqrt{v_D - v}} = -\frac{M}{U}\frac{\partial}{\partial u}\int_{v_D}^{v} \frac{a_1(v_D - u_D)du_D}{M\sqrt{u - u_D}} = \frac{2a_1}{U}\sqrt{u - v_D} \tag{24}$$

Equation (21) then yields the velocity potential as

$$\varphi = -\frac{2a_1}{M\pi}\int_{v_w}^{v_w/k_2} \frac{\sqrt{u - v_w}}{\sqrt{u_w - u}}\, du - \frac{U}{M\pi}\int_{v_w/k_2}^{u_w} \frac{du}{\sqrt{u_w - u}}\int_{-k_1 u}^{v_w} \frac{-\alpha dv}{\sqrt{v_w - v}} \tag{25}$$

The two integrations indicated in equation (25) may be evaluated by formulas 111 and 113 of reference 7 to give

$$\varphi_a = -\frac{2a_1}{M\pi}\int_{v_w}^{v_w/k_2} \frac{\sqrt{u - v_w}}{\sqrt{u_w - u}}\, du = \frac{2a_1}{M\pi}\left[\frac{\sqrt{1 - k_2}}{k_2}\sqrt{v_w(k_2 u_w - v_w)}\right.$$

$$\left. + (v_w - u_w)\tan^{-1}\sqrt{\frac{v_w(1 - k_2)}{k_2 u_w - v_w}}\right] \tag{26}$$

and

$$\varphi_b = -\frac{U}{M\pi}\int_{v_w/k_2}^{u_w} \frac{du}{\sqrt{u_w - u}}\int_{-k_1 u}^{v_w} \frac{-\alpha dv}{\sqrt{v_w - v}} = \frac{2U\alpha}{M\pi}\left[\frac{\sqrt{k_1 + k_2}}{k_2}\sqrt{v_w(k_2 u_w - v_w)}\right.$$

$$\left. + \frac{k_1 u_w + v_w}{\sqrt{k_1}}\tan^{-1}\sqrt{\frac{k_1(k_2 u_w - v_w)}{v_w(k_1 + k_2)}}\right] \tag{27}$$

The potential $\varphi = \varphi_a + \varphi_b$ must assume the value $a_1 y$ along the curve $v_w = k_2 u_w$. Equation (25) (from equations (26) and (27)) meets this requirement. Moreover, $\frac{\partial\varphi}{\partial y}$ must be equal to a_1 along the curve $v_w = k_2 u_w$ if the Kutta-Joukowski condition is to be satisfied. Differentiation of equations (26) and (27) yields

$$\frac{\partial\varphi_a}{\partial y} = \frac{a_1}{\pi}\left[-\frac{\sqrt{1-k_2}}{k_2}\sqrt{\frac{v_w}{k_2u_w-v_w}}\,(k_2+1) + 2\tan^{-1}\sqrt{\frac{v_w(1-k_2)}{k_2u_w-v_w}}\right] \tag{28}$$

$$\frac{\partial\varphi_b}{\partial y} = \frac{U\alpha}{\pi}\left[-\frac{(k_2+1)\sqrt{k_1+k_2}}{k_2}\sqrt{\frac{v_w}{k_2u_w-v_w}} + \frac{(1-k_1)}{\sqrt{k_1}}\tan^{-1}\sqrt{\frac{k_1(k_2u_w-v_w)}{v_w(k_1+k_2)}}\right] \tag{29}$$

Setting $\frac{\partial\varphi}{\partial y} = \frac{\partial\varphi_a}{\partial y} + \frac{\partial\varphi_b}{\partial y} = a_1$ at $v_w = k_2u_w$ gives

$$a_1 = -U\alpha\sqrt{\frac{k_1+k_2}{1-k_2}} \tag{30}$$

The cross velocity on the wing is then

$$\frac{\partial\varphi}{\partial y} = \frac{U\alpha}{\pi}\left[\frac{(1-k_1)}{\sqrt{k_1}}\tan^{-1}\sqrt{\frac{k_1(k_2u_w-v_w)}{v_w(k_1+k_2)}} - 2\sqrt{\frac{k_1+k_2}{1-k_2}}\tan^{-1}\sqrt{\frac{v_w(1-k_2)}{k_2u_w-v_w}}\right] \tag{31}$$

In a similar manner,

$$\frac{\partial\varphi}{\partial x} = \frac{\partial\varphi_a}{\partial x} + \frac{\partial\varphi_b}{\partial x} = \frac{U\alpha}{\beta\pi}\frac{(k_1+1)}{\sqrt{k_1}}\tan^{-1}\sqrt{\frac{k_1(k_2u_w-v_w)}{v_w(k_1+k_2)}} \tag{32}$$

which is in agreement with equation (12) and with the results of reference 8. W. D. Hayes of North American Aviation, Inc., has obtained equation (32) from conical-flow relations.

Both the x and y components of the perturbation velocity are continuous (equations (31) and (32)) across the subsonic trailing edge, as required by the Kutta-Joukowski condition. The upwash over the wing tip is also continuous. From equation (22a),

$$\lambda_b = \frac{2\alpha}{\pi}\left[\sqrt{\frac{u_D(k_1+k_2)}{v_D-k_2u_D}} - \tan^{-1}\sqrt{\frac{u_D(k_1+k_2)}{v_D-k_2u_D}}\right] \tag{33}$$

From equations (24) and (23a),

$$\lambda_a = \frac{2a_1}{U\pi}\frac{\partial}{\partial v}\int_{k_2u}^{v}\frac{\sqrt{u-v_D}}{\sqrt{v-v_D}}\,dv_D$$

Evaluation of λ_a and replacement of u and v by u_D and v_D, respectively, gives

$$\lambda_a(u_D,v_D) = -\frac{2\alpha}{\pi}\sqrt{\frac{k_1+k_2}{1-k_2}}\left\{\frac{1}{2}\sqrt{\frac{u_D(1-k_2)}{v_D-k_2u_D}} + \log\frac{\sqrt{u_D-v_D}}{\sqrt{v_D-k_2u_D}+\sqrt{u_D(1-k_2)}}\right.$$

$$\left. + \frac{1}{2} - \frac{v_D-u_D}{2\sqrt{v_D-k_2u_D}\left[\sqrt{v_D-k_2u_D}+\sqrt{u_D(1-k_2)}\right]}\right\} \tag{34}$$

Addition of λ_a and λ_b yields

$$\lambda = -\frac{2\alpha}{\pi}\left[\tan^{-1}\sqrt{\frac{(k_1+k_2)u_D}{v_D-k_2u_D}} + \sqrt{\frac{k_1+k_2}{1-k_2}}\log\frac{\sqrt{u_D-v_D}}{\sqrt{v_D-k_2u_D}+\sqrt{u_D(1-k_2)}}\right] \tag{35}$$

Equation (35) is valid only in the region $S_{D,1}$ of figure 5. As v approaches k_2u, λ from equation (35) approaches $-\alpha$, as required by the Kutta-Joukowski condition. The solution then satisfies the Kutta-Joukowski condition in all the perturbation-velocity components even though only one of the components was applied to evaluate the constant a_1.

The x and y components of the perturbation velocity and the slopes of the streamlines in the region $S_{D,1}$ are plotted as a function of $\beta y/x$ in figures 6 to 8 for a wing on which $k_1 = 2$ and $k_2 = 0.5$. The x and y components (figs. 6 and 7) of the perturbation velocity decrease as $\beta y/x$ is changed from -1 (innermost Mach line) to -1/3 (the wing tip). Both the x and y components remain constant in the region $-\frac{1}{3} \leq \frac{\beta y}{x} \leq 0$. The streamline

slopes (fig. 8) are equal to $-\alpha$ on the wing. The slopes change from $-\alpha$ to $+\infty$ in the region $-\frac{1}{3} \leq \frac{\beta y}{x} \leq 0$. Similar values were found by Lagerstrom in an investigation for the Douglas Aircraft Co.

Generalized wing tip. - For this example, a function $f(y)$ that can be expanded in a power series may be chosen for the region $S_{D,1}$ of figure 4(b). The function $f(y)$ may then be expressed as

$$f(y) = f\left(\frac{v_D-u_D}{M}\right)$$

$$= a_0 + \frac{a_1(v_D-u_D)}{M} + \frac{a_2(v_D-u_D)^2}{M^2} + \ldots \tag{36}$$

Also, from formula 750 of reference 7,

$$\frac{1}{\sqrt{u-u_D}} = \frac{1}{\sqrt{u-v_D}}\left[1 - \frac{1}{2}\left(\frac{v_D-u_D}{u-v_D}\right) + \frac{1\times3}{2\times4}\left(\frac{v_D-u_D}{u-v_D}\right)^2 - \frac{1\times3\times5}{2\times4\times6}\left(\frac{v_D-u_D}{u-v_D}\right)^3 + \ldots\right] \tag{37}$$

The integrand in the second member of equation (19) then becomes

$$\frac{f(y)}{\sqrt{u-u_D}} = \frac{1}{\sqrt{u-v_D}}\left\{a_0 + \left[\frac{a_1}{M} - \frac{a_0}{2(u-v_D)}\right](v_D-u_D) + \left[\frac{a_2}{M^2} - \frac{a_1}{2M(u-v_D)} + \frac{1\times3}{2\times4(u-v_D)^2}\right](v_D-u_D)^2 + \left[\frac{a_3}{M^3} - \frac{a_2}{2M^2(u-v_D)} + \frac{a_1}{M}\frac{1\times3}{2\times4(u-v_D)^2} - \frac{a_0}{2\times4\times6}\frac{1\times3\times5}{(u-v_D)^3}\right](v_D-u_D)^3 + \ldots\right\} \tag{38}$$

Integration of equation (38) with respect to u_D yields

$$\int_{v_D}^{u} \frac{f(y)du_D}{\sqrt{u-u_D}} = a_0(u-v_D)^{\frac{1}{2}} - \left[\frac{a_1}{M} - \frac{a_0}{2(u-v_D)}\right]\frac{(u-v_D)^{\frac{3}{2}}}{2}$$

$$+ \left[\frac{a_2}{M^2} - \frac{a_1}{2M(u-v_D)} + \frac{1\times3}{2\times4}\frac{a_0}{(u-v_D)^2}\right]\frac{(u-v_D)^{\frac{5}{2}}}{3}$$

$$-\left[\frac{a_3}{M^3} - \frac{a_2}{2M^2(u-v_D)} + \frac{1\times3\ a_1}{2\times4\ M(u-v_D)^2} - \frac{1\times3\times5\ a_0}{2\times4\times6(u-v_D)^3}\right]\frac{(u-v_D)^{\frac{7}{2}}}{4} + \ldots \tag{39}$$

Equation (39) may be simplified by collecting the coefficients of the constants a_0, a_1, a_2, etc.:

$$\int_{v_D}^{u} \frac{f(y)du_D}{\sqrt{u-v_D}} = a_0\ (u-v_D)^{\frac{1}{2}}\left(1 + \frac{1}{2\times2} + \frac{1\times3}{2\times4\times3} + \frac{1\times3\times5}{2\times4\times6\times4} + \ldots\right)$$

$$- \frac{a_1}{M}\ (u-v_D)^{\frac{3}{2}}\left(\frac{1}{2} + \frac{1}{2\times3} + \frac{1\times3}{2\times4\times4} + \frac{1\times3\times5}{2\times4\times6\times5} + \ldots\right)$$

$$+ \frac{a_2}{M^2}\ (u-v_D)^{\frac{5}{2}}\left(\frac{1}{3} + \frac{1}{2\times4} + \frac{1\times3}{2\times4\times5} + \frac{1\times3\times5}{2\times4\times6\times6} + \ldots\right)$$

$$- \frac{a_3}{M^3}\ (u-v_D)^{\frac{7}{2}}\left(\frac{1}{4} + \frac{1}{2\times5} + \frac{1\times3}{2\times4\times6} + \frac{1\times3\times5}{2\times4\times6\times7} + \ldots\right)$$

$$+ \ldots \tag{40}$$

Now by formulas 750 and 482 of reference 7,

$$\int_0^1 \frac{x^{n-1}dx}{\sqrt{1-x}} = \frac{1}{n} + \frac{1}{2(n+1)} + \frac{1\times3}{2\times4(n+2)} + \frac{1\times3\times5}{2\times4\times6(n+3)} + \ldots$$

$$= \frac{\Gamma(n)\,\Gamma\left(\frac{1}{2}\right)}{\Gamma\left(n + \frac{1}{2}\right)} \tag{41}$$

Equation (40) then becomes

$$\int_{v_D}^{u} \frac{f(y)du_D}{\sqrt{u-u_D}} = a_0 \, (u-v_D)^{\frac{1}{2}} \times \frac{1}{\frac{1}{2}} - \frac{a_1}{M} (u-v_D)^{\frac{3}{2}} \times \frac{1}{\frac{3}{2}\times\frac{1}{2}}$$

$$+ \frac{a_2}{M^2} (u-v_D)^{\frac{5}{2}} \times \frac{2\times1}{\frac{5}{2}\times\frac{3}{2}\times\frac{1}{2}} - \frac{a_3}{M^3} (u-v_D)^{\frac{7}{2}} \times \frac{3\times2\times1}{\frac{7}{2}\times\frac{5}{2}\times\frac{3}{2}\times\frac{1}{2}} + \cdot \cdot \cdot \cdot$$

$$= \sum_{m=0}^{\infty} (-1)^m \frac{a_m}{M^m} (u-v_D)^{\frac{2m+1}{2}} \frac{\Gamma(m+1)\Gamma\left(\frac{1}{2}\right)}{\Gamma\left(m+\frac{3}{2}\right)} \tag{42}$$

Partial differentiation of equation (42) with respect to u yields

$$\frac{\partial}{\partial u}\int_{v_D}^{u} \frac{f(y)du_D}{\sqrt{u-u_D}} = \frac{a_0}{(u-v_D)^{\frac{1}{2}}}$$

$$- \frac{a_1}{M} (u-v_D)^{\frac{1}{2}} \frac{1}{\frac{1}{2}} + \frac{a_2}{M^2} (u-v_D)^{\frac{3}{2}} \frac{2\times1}{\frac{3}{2}\times\frac{1}{2}}$$

$$- \frac{a_3}{M^3} (u-v_D)^{\frac{5}{2}} \frac{3\times2\times1}{\frac{5}{2}\times\frac{3}{2}\times\frac{1}{2}} + \cdot \cdot \cdot$$

$$= \sum_{m=0}^{\infty} (-1)^m \frac{a_m}{M^m} (u-v_D)^{\frac{2m-1}{2}} \frac{\Gamma(m+1)\,\Gamma\left(\frac{1}{2}\right)}{\Gamma\left(m+\frac{1}{2}\right)} \tag{43}$$

Equation (43) shows that either member of equation (19) is a function only of the quantity $u-v_D$.

988

The portion of the velocity potential associated with the function $f(y)$ is given from equation (21) as

$$\varphi_a = \frac{1}{\pi}\int_{v_w}^{u_2(v_w)} \frac{du}{\sqrt{u_w-u}}\left[\frac{\partial}{\partial u}\int_{v_w}^{u} \frac{f\left(\frac{v_w-u_D}{M}\right)du_D}{\sqrt{u-u_D}}\right] \tag{44}$$

where v_w has replaced v_D inside the bracket, because only u and u_D are variables in the manipulation. From formula 750 of reference 7,

$$\frac{1}{\sqrt{u_w-u}} = \frac{1}{\sqrt{u_w-v_w}}\left[1 + \frac{1}{2}\left(\frac{u-v_w}{u_w-v_w}\right) + \frac{1\times3}{2\times4}\left(\frac{u-v_w}{u_w-v_w}\right)^2 + \frac{1\times3\times5}{2\times4\times6}\left(\frac{u-v_w}{u_w-v_w}\right)^3 + \cdot\cdot\cdot\right] \tag{45}$$

Substituting equations (43) and (45) into (44), with v_w replacing v_D and $u_2(v_w)$ shortened to u_2, yields

$$
\begin{aligned}
\pi\varphi_a = {} & 2(u_2-v_w)^{\frac{1}{2}}\left[\frac{a_0}{(u_w-v_w)^{\frac{1}{2}}}\right] \\
& + \frac{2}{3}\,(u_2-v_w)^{\frac{3}{2}}\left[\frac{a_0}{2(u_w-v_w)^{\frac{3}{2}}} - \frac{2a_1}{M(u_w-v_w)^{\frac{1}{2}}}\right] \\
& + \frac{2}{5}\,(u_2-v_w)^{\frac{5}{2}}\left[\frac{1\times3}{2\times4}\,\frac{a_0}{(u_w-v_w)^{\frac{5}{2}}} - \frac{1\times2}{2(u_w-v_w)^{\frac{3}{2}}}\,\frac{a_1}{M} + \frac{a_2}{M^2(u_w-v_w)^{\frac{1}{2}}}\,\frac{2\times1}{\frac{3}{2}\times\frac{1}{2}}\right] \\
& + \frac{2}{7}\,(u_2-v_w)^{\frac{7}{2}}\left[\frac{1\times3\times5}{2\times4\times6}\,\frac{a_0}{(u_w-v_w)^{\frac{7}{2}}} - \frac{1\times3\times2}{2\times4(u_w-v_w)^{\frac{5}{2}}}\,\frac{a_1}{M}\right. \\
& \qquad \left. + \frac{1\times2\times1}{2\times\frac{3}{2}\times\frac{1}{2}(u_w-v_w)^{\frac{3}{2}}}\,\frac{a_2}{M^2} - \frac{3\times2\times1}{\frac{5}{2}\times\frac{3}{2}\times\frac{1}{2}}\,\frac{a_3}{M^3}\,\frac{1}{(u_w-v_w)^{\frac{1}{2}}}\right] \\
& + \frac{2}{9}\,(u_2-v_w)^{\frac{9}{2}}\left[\frac{1\times3\times5\times7}{2\times4\times6\times8}\,\frac{a_0}{(u_w-v_w)^{\frac{9}{2}}} - \frac{1\times3\times5\times2}{2\times4\times6(u_w-v_w)^{\frac{5}{2}}}\,\frac{a_1}{M} + \ldots\right] \\
& + \ldots
\end{aligned}
\tag{46}
$$

Collecting the coefficients of the constants a_0, a_1, a_2 . . . gives

$$
\begin{aligned}
\pi\varphi_a = {} & 2a_0\left(\frac{u_2-v_w}{u_w-v_w}\right)^{\frac{1}{2}}\left[1 + \frac{1}{2\times3}\left(\frac{u_2-v_w}{u_w-v_w}\right) + \frac{1\times3}{2\times4\times5}\left(\frac{u_2-v_w}{u_w-v_w}\right)^2 + \ldots\right] \\
& - \frac{2\times2}{M}\,a_1\,\frac{(u_2-v_w)^{\frac{3}{2}}}{(u_w-v_w)^{\frac{1}{2}}}\left[\frac{1}{3} + \frac{1}{2\times5}\left(\frac{u_2-v_w}{u_w-v_w}\right) + \frac{1\times3}{2\times4\times7}\left(\frac{u_2-v_w}{u_w-v_w}\right)^2 + \ldots\right] \\
& + \frac{2\times2\times1}{\frac{3}{2}\times\frac{1}{2}}\,\frac{a_2}{M^2}\,\frac{(u_2-v_w)^{\frac{5}{2}}}{(u_w-v_w)^{\frac{1}{2}}}\left[\frac{1}{5} + \frac{1}{2\times7}\,\frac{(u_2-v_w)}{(u_w-v_w)} + \frac{1\times3}{2\times4\times7}\left(\frac{u_2-v_w}{u_w-v_w}\right)^2 + \ldots\right] \\
& - \frac{2\times3\times2\times1}{\frac{5}{2}\times\frac{3}{2}\times\frac{1}{2}}\,\frac{a_3}{M^3}\,\frac{(u_2-v_w)^{\frac{7}{2}}}{(u_w-v_w)^{\frac{1}{2}}}\left[\frac{1}{7} + \frac{1}{2\times9}\left(\frac{u_2-v_w}{u_w-v_w}\right) + \frac{1\times3}{2\times4\times9}\left(\frac{u_2-v_w}{u_w-v_w}\right)^2 + \ldots\right] \\
& + \ldots
\end{aligned}
\tag{46a}
$$

From a comparison of each infinite series of equation (46a) with the series expansion for $(1-x^2)^{-\frac{1}{2}}$ (formula 754 of reference 7), the following equation may be deduced:

$$\pi\varphi_a = 2a_0\int_0^{\left(\frac{u_2-v_w}{u_w-v_w}\right)^{\frac{1}{2}}} \frac{ds}{\sqrt{1-s^2}}$$

$$- \frac{2\times1}{\frac{1}{2}}\frac{a_1}{M}(u_w-v_w)\int_0^{\left(\frac{u_2-v_w}{u_w-v_w}\right)^{\frac{1}{2}}} \frac{s^2\ ds}{\sqrt{1-s^2}}$$

$$+ \frac{2\times2\times1}{\frac{3}{2}\times\frac{1}{2}}\frac{a_2}{M^2}(u_w-v_w)^2\int_0^{\left(\frac{u_2-v_w}{u_w-v_w}\right)^{\frac{1}{2}}} \frac{s^4\ ds}{\sqrt{1-s^2}}$$

$$- \frac{2\times3\times2\times1}{\frac{5}{2}\times\frac{3}{2}\times\frac{1}{2}}\frac{a_3}{M^3}(u_w-v_w)^3\int_0^{\left(\frac{u_2-v_w}{u_w-v_w}\right)^{\frac{1}{2}}} \frac{s^6\ ds}{\sqrt{1-s^2}}$$

$$+ \ldots$$

(where s is simply an integration variable) or

$$\pi\varphi_a = 2\sum_{n=0}^{\infty} \frac{\Gamma(n+1)\Gamma\left(\frac{1}{2}\right)a_n(v_w-u_w)^n}{\Gamma\left(n+\frac{1}{2}\right)M^n}\int_0^{\sqrt{\frac{u_2-v_w}{u_w-v_w}}} \frac{s^{2n}\ ds}{\sqrt{1-s^2}} \tag{46b}$$

(The integrals of equation (46b) may be expressed as incomplete beta functions.)

Along the boundary $u_2 = u_w$, the upper limit of the integrations becomes unity and the values of the integrals are given by formula 482 of reference 7 as

$$\int_0^1 \frac{s^{2n}\ ds}{\sqrt{1-s^2}} = \frac{\Gamma\left(n+\frac{1}{2}\right)\Gamma\left(\frac{1}{2}\right)}{2\Gamma(n+1)}$$

In this special case, then, φ_a reduces to

$$\pi\varphi_a = \pi \sum_{n=0}^{\infty} \frac{a_n}{M^n} (v_w-u_w)^n = \pi f(y)$$

as is required along the curve $u_2=u_w$.

The portion of the x component of the perturbation velocity associated with $f(y)$ may be obtained by partial differentiation of equation (46b) to give

$$\frac{\partial\varphi_a}{\partial x} = \frac{M}{2\beta\pi} \frac{\left(\frac{du_2}{dv_w}-1\right)}{\sqrt{u_w-u_2}} \sum_{n=0}^{\infty} \frac{(-1)^n\Gamma(n+1)\Gamma\left(\frac{1}{2}\right)a_n}{\Gamma\left(n+\frac{1}{2}\right)M^n} (u_2-v_w)^{n-\frac{1}{2}} \tag{47}$$

The series of equation (47) is a function only of v_w. Alterations of the function $f(y)$ for a given plan form cannot change the factor

$$\frac{\left(\frac{du_2}{dv_w}-1\right)}{\sqrt{u_w-u_2}}$$

When an arbitrary strength of vorticity is allowed, the x component of the perturbation velocity may be obtained by addition of equations (7a) and (47):

$$\frac{\partial\varphi}{\partial x} = \frac{U\alpha}{2\beta\pi}\int_{ab} \frac{dv-du}{\sqrt{(u_w-u)(v_w-v)}}$$

$$+ \frac{U\alpha}{\beta\pi} \frac{\left(1-\frac{du_2}{dv_w}\right)}{\sqrt{u_w-u_2}} \left[\sqrt{v_w-v_1(u_2)} - \frac{M}{2U\alpha} \sum_{n=0}^{\infty} \frac{(-1)^n\Gamma(n+1)\Gamma\left(\frac{1}{2}\right)a_n}{\Gamma\left(n+\frac{1}{2}\right)M^n} (u_2-v_w)^{n-\frac{1}{2}}\right] \tag{48}$$

or

$$\frac{\partial\varphi}{\partial x} = \frac{U\alpha}{2\beta\pi}\int_{ab} \frac{dv-du}{\sqrt{(u_w-u)(v_w-v)}} + \frac{\left(1-\frac{du_2}{dv_w}\right)g(v_w)}{\sqrt{u_w-u_2}} \tag{48a}$$

886

where $g(v_w)$ represents $\frac{U\alpha}{\beta\pi}$ times the braced portion of equation (48). The function $g(v_w)$ depends on the shape of the wing-plan boundaries (fig. 4(f)) and on the amount of vorticity in the wake of the subsonic trailing edge. The quantity $\left(1-\frac{du_2}{dv_w}\right)g(v_w)$ is constant along lines of constant v_w.

If solutions that satisfy the Kutta-Joukowski condition are desired, the constants of equation (48) may be evaluated. Along the subsonic trailing edge, the x component of the perturbation velocity must be zero. The integral of equation (48) is zero along the boundary because the limits of integration then coincide. The Kutta-Joukowski condition can then be satisfied only if

$$\frac{2U\alpha}{M}\sqrt{v_w-v_1(u_2(v_w))} = \sum_{n=0}^{\infty}\frac{(-1)^n\Gamma(n+1)\Gamma\left(\frac{1}{2}\right)}{\Gamma\left(n+\frac{1}{2}\right)}\frac{a_n}{M^n}(u_2-v_w)^{n-\frac{1}{2}} \tag{49}$$

Equation (49) allows all the coefficients a_n to be chosen. Because the first member is finite when $u_2 = v_w$, $a_0 = 0$. The evaluation of of the other coefficients may be simplified by setting $p = \sqrt{u_2-v_w}$. Equation (49) then becomes

$$\frac{2U\alpha}{M}\sqrt{v_w-v_1(u_2(v_w))} = \sum_{n=1}^{\infty}\frac{(-1)^n\Gamma(n+1)\Gamma\left(\frac{1}{2}\right)}{\Gamma\left(n+\frac{1}{2}\right)}\frac{a_n}{M^n}p^{2n-1} \tag{49a}$$

Equation (49a) is a power series in p, whose nth coefficient a_n may be evaluated in terms of the $(2n-1)$th derivative about $p = 0$. Differentiation of the first member of equation (49a) may be accomplished by successive applications of the relation

$$\frac{d}{dp} = \frac{2\sqrt{u_2(v_w)-v_w}}{\left[\frac{du_2(v_w)}{dv_w}-1\right]}\frac{d}{dv_w} \tag{50}$$

By application of equation (50) and L'Hospital's rule to equation (49a), the coefficients a_1 and a_2, for example, have been evaluated.

$$a_1 = -U\alpha\sqrt{\frac{1-\frac{dv_1}{du_2}\frac{du_2}{dv_w}}{\frac{du_2}{dv_w}-1}} \qquad \lim u_2\rightarrow v_w\rightarrow 0 \tag{51}$$

886

and

$$a_2 = \frac{MU\alpha}{2}\left(1 - \frac{dv_1}{du_2}\frac{du_2}{dv_w}\right)^{\frac{1}{2}} \frac{d^2u_2}{dv_w{}^2}\left[\left(\frac{du_2}{dv_w} - 1\right)^{-\frac{5}{2}} - \left(\frac{du_2}{dv_w} - 1\right)^{-\frac{3}{2}} - \frac{3}{8}\left(\frac{du_2}{dv_w} - 1\right)\right]$$

$$- \frac{MU\alpha}{2}\left(1 - \frac{dv_1}{du_2}\frac{du_2}{dv_w}\right)^{-\frac{1}{2}}\left[\frac{d^2v_1}{du_2{}^2}\left(\frac{du_2}{dv_w}\right)^2 + \frac{dv_1}{du_2}\frac{d^2u_2}{dv_w{}^2}\right]\left[\left(\frac{du_2}{dv_w} - 1\right)^{\frac{1}{2}}\right.$$

$$\left. - \left(\frac{du_2}{dv_w} - 1\right)^{-\frac{1}{2}} - \frac{3}{8}\left(1 - \frac{dv_1}{du_2}\frac{du_2}{dv_w}\right)\right] \qquad \lim u_2 \rightarrow v_w \rightarrow 0. \quad (52)$$

The other coefficients may be similarly evaluated. Once the coefficients a_1, a_2, . . . a_n have been determined, all the perturbation-velocity components in the plane of the wing may be derived by means of the equations previously presented.

A special case of equation (51) gives equation (30). The solution for the swept trapezoidal wing may thus be obtained from the general equations that have been derived without the a priori assumption that the flow is conical.

If only functions derivable from the x component of the perturbation velocity are required (such as pressure, lift, and drag coefficients), equation (3), (6), (7), or (48) may be directly applied. The solution for the wing of figure 4(f) that satisfies the Kutta-Joukowski condition may be obtained by substituting equation (49) in equation (48) to yield

$$\frac{\partial\varphi}{\partial x} = \frac{U\alpha}{2\beta\pi}\int_{ab} \frac{dv-du}{\sqrt{(u_w-u)(v_w-v)}} \qquad (53)$$

For the special case of a wing with a straight leading edge (fig. 3), equations (53) and (8) give equation (12), which was previously obtained by intuition.

RECAPITULATION

A recapitulation of the formulas for the x component of the perturbation-velocity potential of a single thin flat-plate wing tip

886

with arbitrary plan boundaries is given herein. The lift-distribution coefficient $C_{p,L}$ of thin wing tips may be obtained from these formulas by the relation

$$C_{p,L} = (-2C_p) = \frac{4}{U}\frac{\partial\varphi}{\partial x}$$

(a) In regions not influenced by the wing tip,

$$\frac{\partial\varphi}{\partial x} = \frac{U\alpha}{2\beta\pi}\int_{abd} \frac{dv-du}{\sqrt{(u_w-u)(v_w-v)}}$$

(from equation 3(a) and fig. 1(a)).

(b) In regions influenced by subsonic leading or trailing edges when no vortex sheet exists directly behind the subsonic trailing edge,

$$\frac{\partial\varphi}{\partial x} = \frac{U\alpha}{2\beta\pi}\int_{ab} \frac{dv-du}{\sqrt{(u_w-u)(v_w-v)}} + \frac{U\alpha}{\beta\pi}\left[1 - \frac{du_2(v_w)}{dv_w}\right]\sqrt{\frac{v_w-v_1(u_2(v_w))}{u_w-u_2(v_w)}}$$

(from equation (7a) or (48) and fig. 2(b)).

(c) In regions influenced by subsonic trailing edges when an undetermined amount of vorticity is allowed in the vortex sheet behind the trailing edge,

$$\frac{\partial\varphi}{\partial x} = \frac{U\alpha}{2\beta\pi}\int_{ab} \frac{dv-du}{\sqrt{(u_w-u)(v_w-v)}} + \frac{\left[1 - \frac{du_2(v_w)}{dv_w}\right]g(v_w)}{\sqrt{u_w-u_2(v_w)}}$$

(from equation (48a) and fig. 4(f)).

(d) In regions influenced by subsonic trailing edges when the Kutta-Joukowski condition is satisfied at the trailing edge,

$$\frac{\partial\varphi}{\partial x} = \frac{U\alpha}{2\beta\pi}\int_{ab} \frac{dv-du}{\sqrt{(u_w-u)(v_w-v)}}$$

(from equation (53) and fig. 4(f)).

886

Flight Propulsion Research Laboratory,
National Advisory Committee for Aeronautics,
Cleveland, Ohio, January 12, 1948.

APPENDIX A

SYMBOLS

The following symbols are used in this report:

$a_0, a_1, a_2, \ldots a_n$	coefficients of power-series expansion of $f(y) = a_0 + a_1 y + a_2 y^2 \ldots$
C_p	pressure coefficient on top wing surface
$C_{p,L}$	lift-distribution coefficient ($-2\ C_p$)
$f(y)$	perturbation-velocity potential on top surface of diaphragm in wake of so-called subsonic trailing edge
$g(v_w)$	undetermined function of v_w
k_1	constant greater than 0
k_2	constant whose value lies between 0 and 1
M	free-stream Mach number
m, n	integer summation indices
p =	$\sqrt{u_2 - v_w}$
S	plan-form area
U	free-stream velocity
$u = \frac{M}{2\beta}(\xi - \beta\eta)$, $v = \frac{M}{2\beta}(\xi + \beta\eta)$	oblique coordinates whose axes lie parallel to Mach lines
x, y, z; ξ, η, ζ	Cartesian coordinates
α	angle of attack
β	cotangent of free-stream Mach angle $\left(\sqrt{M^2-1}\right)$
Γ	gamma function

λ	slope of streamlines near $z = 0$ plane measured in y = constant planes (diaphragm-surface slopes)
σ	slope of streamline (on wing slopes) with respect to $z = 0$ plane measured in y = constant planes
φ	perturbation-velocity potential on top wing surface or diaphragm

Subscripts:

1, 2, 3, . . .	numbered areas or curves
a	portion associated with $f(y)$
b	portion not associated with $f(y)$
B	bottom (wing or diaphragm surface)
D	diaphragm
T	top (wing or diaphragm surface)
w	wing

Examples:

σ_T	slope on top wing surface
λ_1	slope of diaphragm in plan-area 1
φ_D	perturbation-velocity potential on top surface of diaphragm
$S_{w(1+2)}$	wing area 1 plus wing area 2
v_1	curve $v = v_1(u)$
$\Gamma(n+1)$	$n!$
φ_a	portion of perturbation-velocity potential on wing surface associated with function $f(y)$
λ_a	portion of diaphragm slope associated with function $f(y)$
ξ_1	value of ξ along leading-edge boundary curve 1

APPENDIX B

DERIVATION OF EQUATION (6)

The velocity potential at point (x,y) for the wing tip of figure 2(a) is given by equation (5) (written in Cartesian coordinates) as

$$\varphi = -\frac{U}{\pi}\iint_{S_{w,1}} \frac{\sigma_T d\xi d\eta}{\sqrt{(x-\xi)^2-\beta^2(y-\eta)^2}} - \frac{U}{\pi}\iint_{S_{w,2}} \frac{(\sigma_B+\sigma_T)d\xi d\eta}{2\sqrt{(x-\xi)^2-\beta^2(y-\eta)^2}} \tag{B1}$$

In terms of the areas bounded by the lettered points in figure 2(c), equation (B1) becomes

$$\varphi = -\frac{U}{\pi}\iint_{abdc} \frac{\sigma_T d\xi d\eta}{\sqrt{(x-\xi)^2-\beta^2(y-\eta)^2}} - \frac{U}{\pi}\iint_{bod} \frac{(\sigma_B+\sigma_T)d\xi d\eta}{2\sqrt{(x-\xi)^2-\beta^2(y-\eta)^2}} \tag{B1a}$$

The velocity potential at point $(x+dx,y)$ may be written

$$\varphi + \frac{\partial\varphi}{\partial x}dx = -\frac{U}{\pi}\iint_{a'b'd'c'} \frac{\left(\sigma_T + \frac{\partial\sigma_T}{\partial\xi}dx\right)d\xi d\eta}{\sqrt{(x-\xi)^2-\beta^2(y-\eta)^2}}$$

$$-\frac{U}{\pi}\iint_{b'od'} \frac{\left[(\sigma_B+\sigma_T) + \frac{\partial(\sigma_B+\sigma_T)}{\partial\xi}dx\right]d\xi d\eta}{2\sqrt{(x-\xi)^2-\beta^2(y-\eta)^2}} \tag{B2}$$

The area $a'b'd'c'$ may be subdivided into the areas $fgkc'$, $a'egf$, and $eb'd'k$. The area $fgkc'$ is the same as the area $abcd$ and the relation of the distances in the denominator is the same for corresponding points. The first integral of equation (B2) may therefore be written

$$-\frac{U}{\pi}\iint_{a'b'd'c'}\frac{\left(\sigma_T+\frac{\partial\sigma_T}{\partial\xi}dx\right)d\xi d\eta}{\sqrt{(x-\xi)^2-\beta^2(y-\eta)^2}}=-\frac{U}{\pi}\iint_{abdc}\frac{\left(\sigma_T+\frac{\partial\sigma_T}{\partial\xi}dx\right)d\xi dx}{\sqrt{(x-\xi)^2-\beta^2(y-\eta)^2}}$$

$$-\frac{U}{\pi}\iint_{a'egf}\frac{\left(\sigma_T+\frac{\partial\sigma_T}{\partial\xi}dx\right)d\xi d\eta}{\sqrt{(x-\xi)^2-\beta^2(y-\eta)^2}}-\frac{U}{\pi}\iint_{eb'd'k}\frac{\left(\sigma_T+\frac{\partial\sigma_T}{\partial\xi}dx\right)d\xi d\eta}{\sqrt{(x-\xi)^2-\beta^2(y-\eta)^2}} \tag{B3}$$

On the other hand, the area b'od' may be expressed as the area ghk plus the area eod'khg minus the area eb'd'k. The area ghk is the same as the area bod and the relation of the distances in the denominator is the same for corresponding points. The second integral of equation (B2) may therefore be written

$$- \frac{U}{\pi}\iint_{b'od'} \frac{\left[(\sigma_B+\sigma_T) + \frac{\partial(\sigma_B+\sigma_T)}{\partial\xi}dx\right]d\xi d\eta}{2\sqrt{(x-\xi)^2-\beta^2(y-\eta)^2}} = - \frac{U}{\pi}\iint_{bod} \frac{\left[(\sigma_B+\sigma_T) + \frac{\partial(\sigma_B+\sigma_T)}{\partial\xi}dx\right]d\xi d\eta}{2\sqrt{(x-\xi)^2-\beta^2(y-\eta)^2}}$$

$$- \frac{U}{\pi}\iint_{eod'khg} \frac{\left[(\sigma_B+\sigma_T) + \frac{\partial(\sigma_B+\sigma_T)}{\partial\xi}dx\right]d\xi d\eta}{2\sqrt{(x-\xi)^2-\beta^2(y-\eta)^2}} + \frac{U}{\pi}\iint_{eb'd'k} \frac{\left[(\sigma_B+\sigma_T) + \frac{\partial(\sigma_B+\sigma_T)}{\partial\xi}dx\right]d\xi d\eta}{2\sqrt{(x-\xi)^2-\beta^2(y-\eta)^2}} \tag{B4}$$

If equation (B1a) is subtracted from the sum of equations (B3) and (B4) and if expressions that lead to infinitesimals of order higher than the first in dx are neglected, the result is

$$\frac{\partial\varphi}{\partial x}dx = - \frac{U}{\pi}\iint_{abdc} \frac{\frac{\partial\sigma_T}{\partial\xi}dxd\xi d\eta}{\sqrt{(x-\xi)^2-\beta^2(y-\eta)^2}} - \frac{U}{\pi}\iint_{bod} \frac{\frac{\partial(\sigma_B+\sigma_T)}{\partial\xi}dxd\xi d\eta}{2\sqrt{(x-\xi)^2-\beta^2(y-\eta)^2}} - \frac{U}{\pi}\iint_{a'egf} \frac{\sigma_T d\xi d\eta}{\sqrt{(x-\xi)^2-\beta^2(y-\eta)^2}}$$

$$- \frac{U}{\pi}\iint_{eod'khg} \frac{(\sigma_B+\sigma_T)d\xi d\eta}{2\sqrt{(x-\xi)^2-\beta^2(y-\eta)^2}} - \frac{U}{\pi}\iint_{eb'd'k} \frac{(\sigma_T-\sigma_B)d\xi d\eta}{2\sqrt{(x-\xi)^2-\beta^2(y-\eta)^2}} \tag{B5}$$

The first two integrals of equation (B5) are surface integrals over the areas $S_{w,1}$ and $S_{w,2}$, respectively. Integration of the third and fourth integrals with respect to ξ over a strip of width dx removes one integral sign and replaces $d\xi$ by dx. The width of the strip in the fifth integral along the ξ direction may be determined with the aid of the following sketch of the area $dd'k$:

886

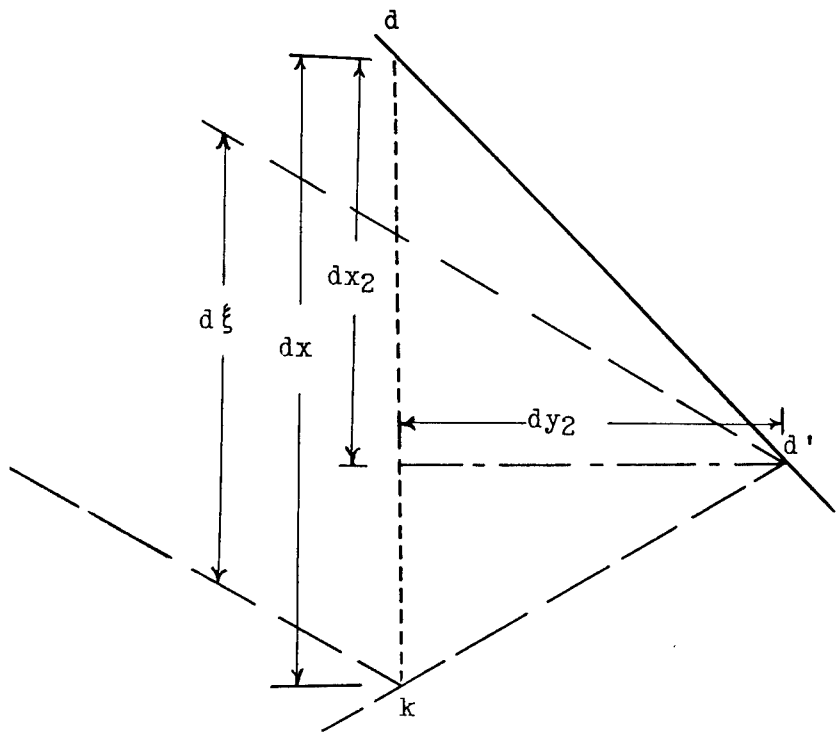

$$
\begin{aligned}
d\xi &= 2(dx-dx_2) \\
&= 2\beta\left(\frac{dy}{dx}\right)_2 dx_2 \\
&= \frac{2\beta\left(\frac{dy}{dx}\right)_2 dx}{1 + \beta\left(\frac{dy}{dx}\right)_2}
\end{aligned}
\tag{B6}
$$

where $\left(\frac{dy}{dx}\right)_2$ is the slope of the wing-boundary curve in the vicinity of the point d. Integration of the fifth integral of equation (B5) with respect to ξ removes one integral sign and replaces $d\xi$ with the fourth member of equation (B6). Equation (B5) thus becomes

886

$$\frac{\partial\varphi}{\partial x} = -\frac{U}{\pi}\iint_{S_{w,1}} \frac{\left(\frac{\partial\sigma_T}{\partial\xi}\right)d\xi\,d\eta}{\sqrt{(x-\xi)^2-\beta^2(y-\eta)^2}} - \frac{U}{\pi}\iint_{S_{w,2}} \frac{\frac{\partial(\sigma_B+\sigma_T)}{\partial\xi}\,d\xi d\eta}{2\sqrt{(x-\xi)^2-\beta^2(y-\eta)^2}}$$

$$-\frac{U}{\pi}\int_{ab} \frac{\sigma_T d\eta}{\sqrt{(x-\xi)^2-\beta^2(y-\eta)^2}} - \frac{U}{\pi}\int_{bod} \frac{(\sigma_B+\sigma_T)d\eta}{2\sqrt{(x-\xi)^2-\beta^2(y-\eta)^2}}$$

$$-\frac{U}{\pi}\int_{bd} \frac{(\sigma_T-\sigma_B)\ \beta\left(\frac{dy}{dx}\right)_2 d\eta}{\left[1+\beta\left(\frac{dy}{dx}\right)_2\right]\sqrt{(x-\xi)^2-\beta^2(y-\eta)^2}} \tag{B7}$$

If equation (B7) is rewritten in oblique coordinates, equation (6) results:

$$\frac{\partial\varphi}{\partial x} = -\frac{U}{2\beta\pi}\iint_{S_{w,1}} \frac{\left(\frac{\partial\sigma_T}{\partial u}+\frac{\partial\sigma_T}{\partial v}\right)du\,dv}{\sqrt{(u_w-u)(v_w-v)}}$$

$$-\frac{U}{4\beta\pi}\iint_{S_{w,2}} \frac{\left[\frac{\partial(\sigma_B+\sigma_T)}{\partial u}+\frac{\partial(\sigma_B+\sigma_T)}{\partial v}\right]du\,dv}{\sqrt{(u_w-u)(v_w-v)}}$$

$$-\frac{U}{2\beta\pi}\int_{ab} \frac{\sigma_T(dv-du)}{\sqrt{(u_w-u)(v_w-v)}}$$

$$-\frac{U}{2\beta\pi}\int_{bod} \frac{(\sigma_B+\sigma_T)(dv-du)}{2\sqrt{(u_w-u)(v_w-v)}}$$

$$-\frac{U}{2\beta\pi}\int_{bd} \frac{(\sigma_T-\sigma_B)\left(1-\frac{du_2}{dv_w}\right)dv}{2\sqrt{(u_w-u)(v_w-v)}} \tag{B7a}$$

886

APPENDIX C

CALCULATION OF PRESSURE COEFFICIENT FOR WING OF FIGURE 3 BY METHOD OF REFERENCE 1

When $\sigma_B = -\sigma_T = \alpha$, equation (5) gives for the velocity potential on the top surface of the wing shown in figure 3

$$\varphi = \frac{U\alpha}{M\pi}\int_{u_2(v_w)}^{u_w} \frac{du}{\sqrt{(u_w-u)}}\int_{-k_1u}^{v_w} \frac{dv}{\sqrt{v_w-v}}$$

$$= \frac{2U\alpha}{M\pi}\int_{u_2(v_w)}^{u_w} \frac{\sqrt{v_w+k_1u}}{\sqrt{u_w-u}}\,du$$

$$= \frac{2U\alpha}{M\pi}\left\{\sqrt{\left[u_w-u_2(v_w)\right]\left[v_w+k_1u_2(v_w)\right]}\right.$$

$$\left. + \frac{(k_1u_w+v_w)}{\sqrt{k_1}}\tan^{-1}\sqrt{\frac{k_1\left[u_w-u_2(v_w)\right]}{v_w+k_1u_2(v_w)}}\right\} \tag{C1}$$

Now

$$\frac{\partial\varphi}{\partial x} = \frac{M}{2\beta}\left(\frac{\partial\varphi}{\partial u} + \frac{\partial\varphi}{\partial v}\right) \tag{C2}$$

Substitution of equation (C1) into equation (C2) yields

$$\frac{\partial\varphi}{\partial x} = \frac{U\alpha}{\beta\pi}\left\{\left[1 - \frac{du_2(v_w)}{dv_w}\right]\sqrt{\frac{v_w+k_1u_2(v_w)}{u_w-u_2(v_w)}} + \frac{(k_1+1)}{\sqrt{k_1}}\tan^{-1}\sqrt{\frac{k_1\left[u_w-u_2(v_w)\right]}{v_w+k_1u_2(v_w)}}\right\} \tag{C3}$$

The pressure coefficient on the top wing surface is then

$$C_p = -\frac{2\alpha}{\beta\pi}\left\{\left[1 - \frac{du_2(v_w)}{dv_w}\right]\sqrt{\frac{v_w+k_1u_2(v_w)}{u_w-u_2(v_w)}} + \frac{k_1+1}{\sqrt{k_1}}\tan^{-1}\sqrt{\frac{k_1\left[u_w-u_2(v_w)\right]}{v_w+k_1u_2(v_w)}}\right\} \tag{C4}$$

REFERENCES

1. Evvard, John C.: Distribution of Wave Drag and Lift in the Vicinity of Wing Tips at Supersonic Speeds. NACA TN No. 1382, 1947.

2. Evvard, John C., and Turner, Richard L.: The Lift Distribution and Upwash Velocities for Arbitrary Thin Wings at Supersonic Speeds. NACA TN No. 1484, 1947.

3. Puckett, Allen E.: Supersonic Wave Drag of Thin Airfoils. Jour. Aero. Sci., vol. 13, no. 9, Sept. 1946, pp. 475-484.

4. Jones, Robert T.: Thin Oblique Airfoils at Supersonic Speed. NACA TN No. 1107, 1946.

5. Whittaker, E. T., and Watson, G. N.: Modern Analysis. Univ. Press (Cambridge), 4th ed., 1935, p. 229.

6. Bosanquet, L. S.: On Abel's Integral Equation and Fractional Integrals. Proc. London Math. Soc., vol. 31, series 2, 1930, pp. 134-143.

7. Peirce, B. O.: A Short Table of Integrals. Ginn and Co., 3rd rev. ed., 1929, p. 18.

8. Heaslet, Max A., Lomax, Harvard, and Jones, Arthur L.: Volterra's Solution of the Wave Equation as Applied to Three-Dimensional Supersonic Airfoil Problems. NACA TN No. 1412, 1947.

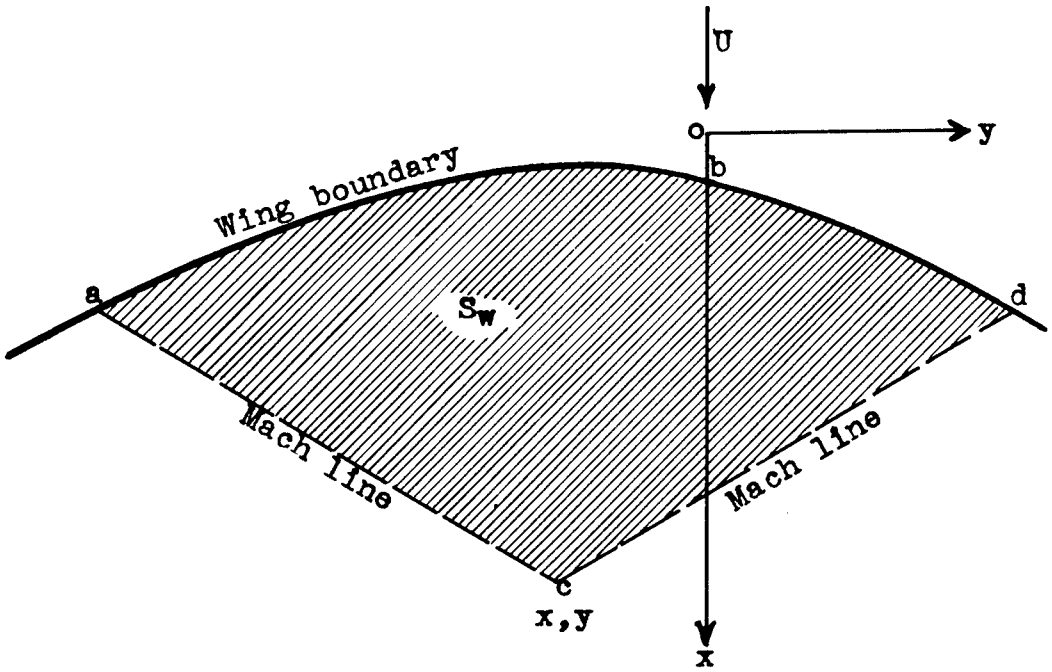

(a)

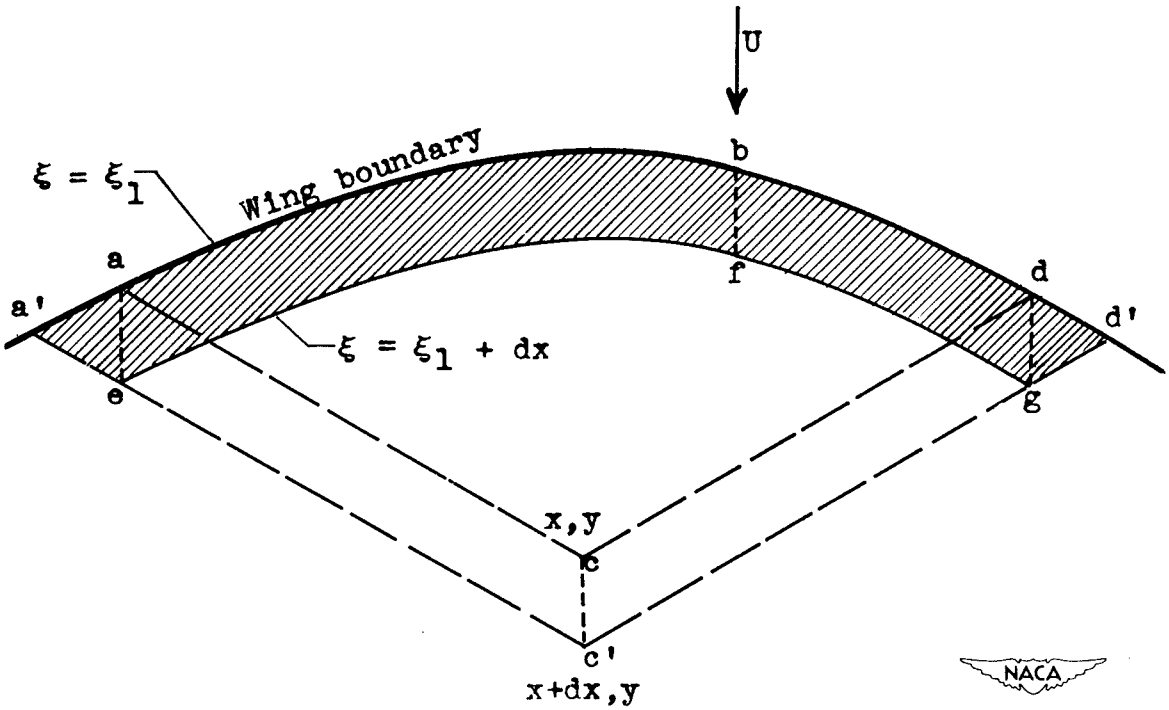

(b)

Figure 1. - Fields of integration for equations (1) to (3).

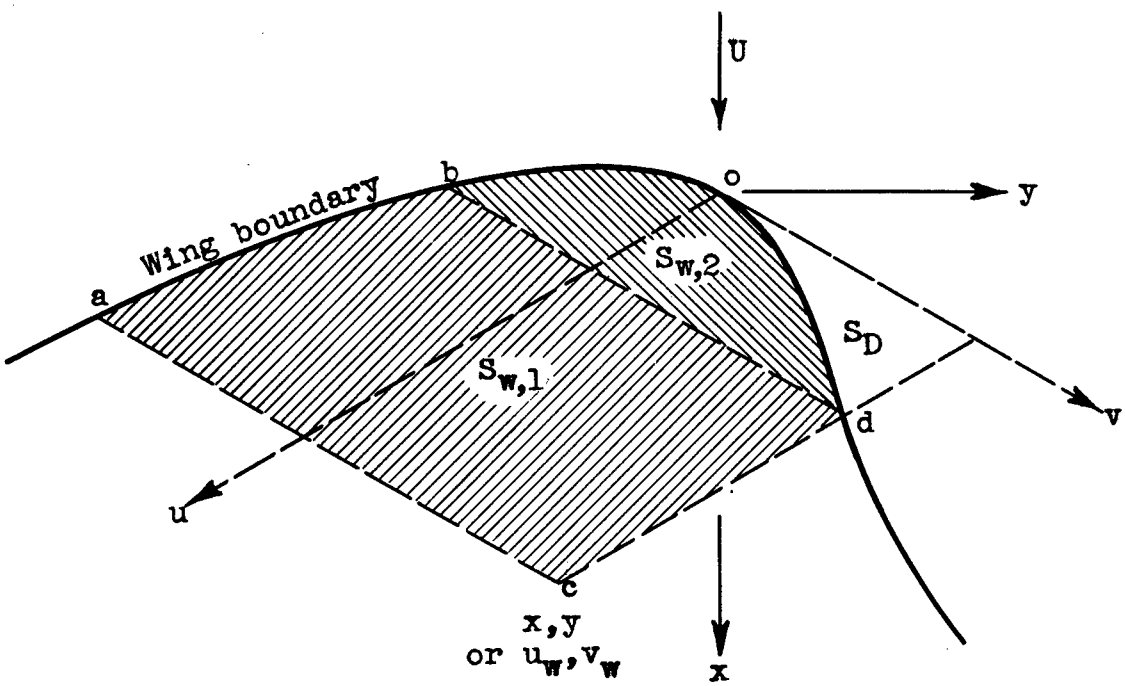

(a)

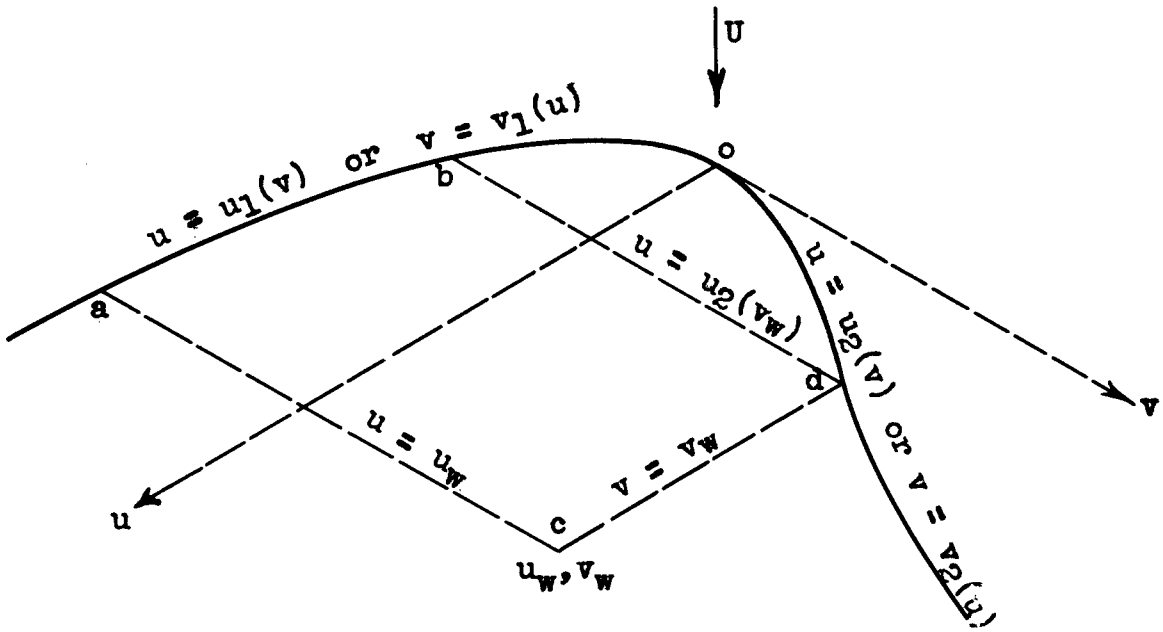

(b)

Figure 2. - Fields of integration for equations (5) to (7).

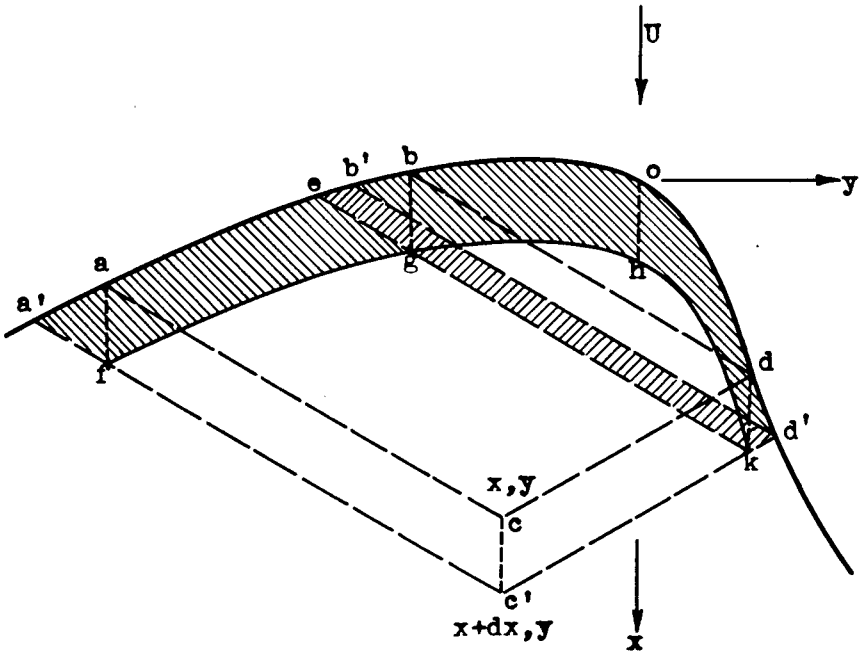

(c)

Figure 2. - Concluded. Fields of integration for equations (5) to (7).

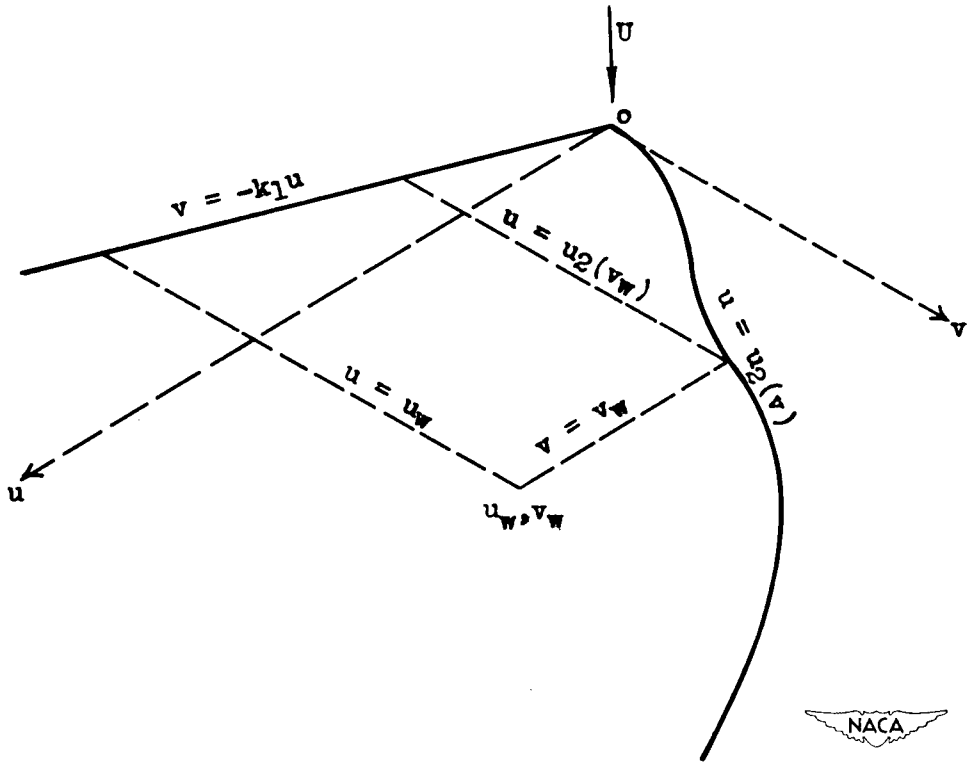

Figure 3. - Boundary limits for equations (9) to (11).

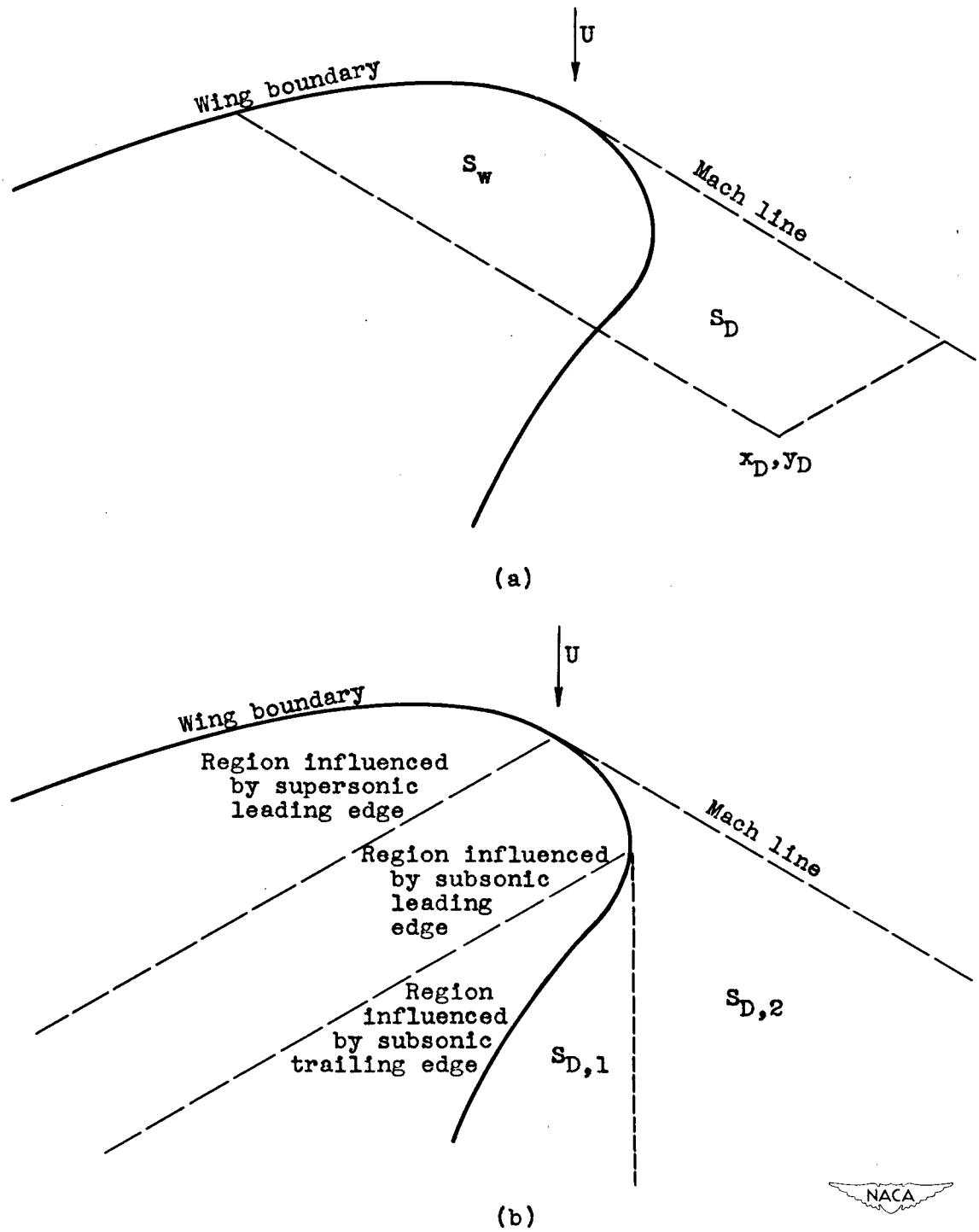

Figure 4. - Integration boundaries for evaluating velocity potential in regions influenced by subsonic trailing edges.

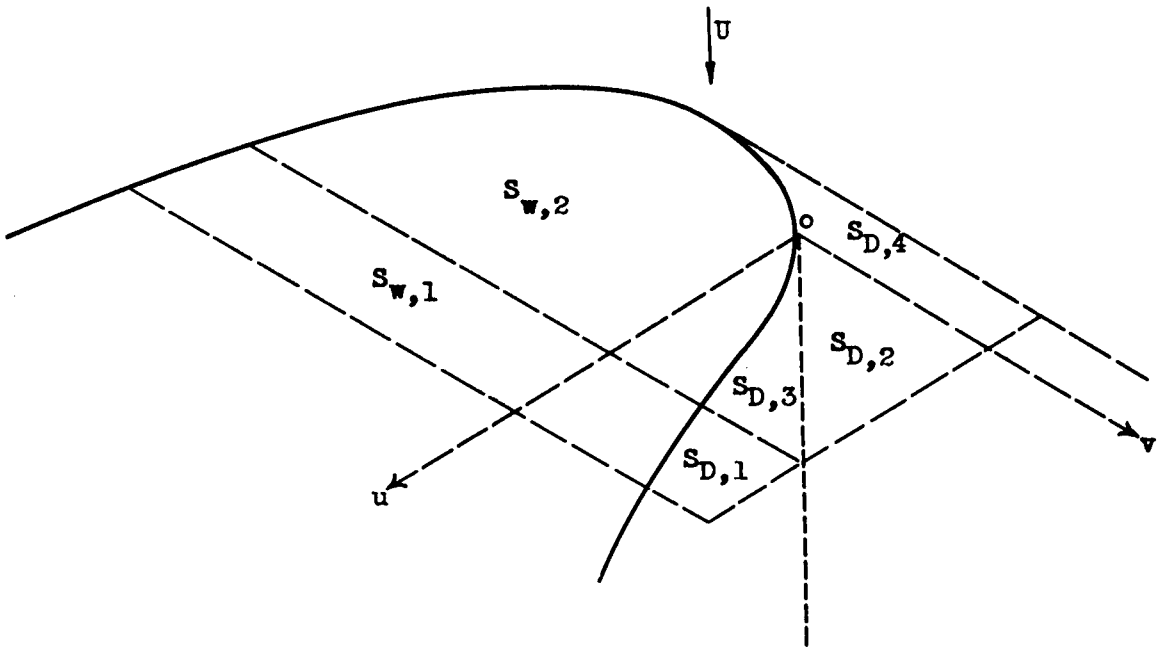

(c)

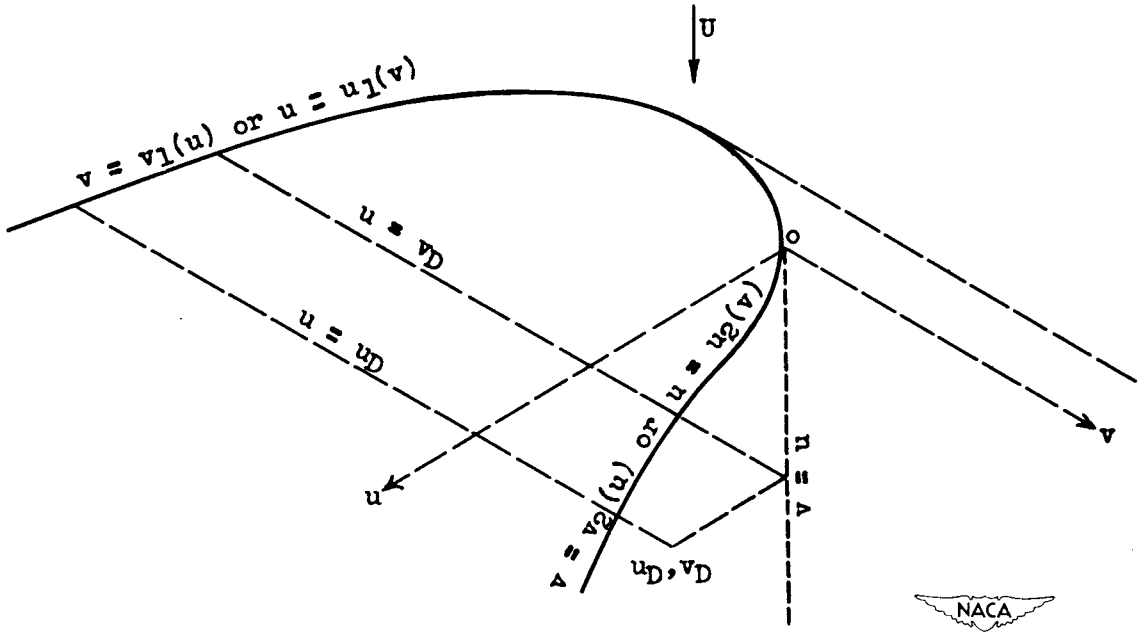

(d)

Figure 4. - Continued. Integration boundaries for evaluating velocity potential in regions influenced by subsonic trailing edges.

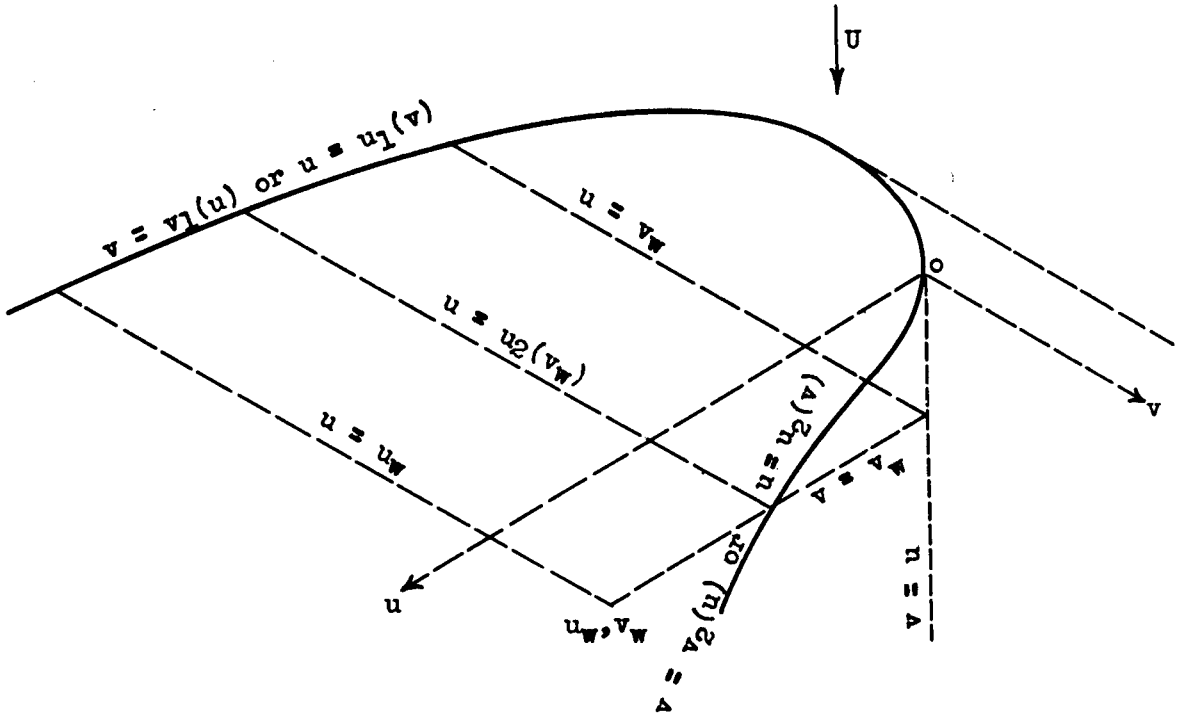

(e)

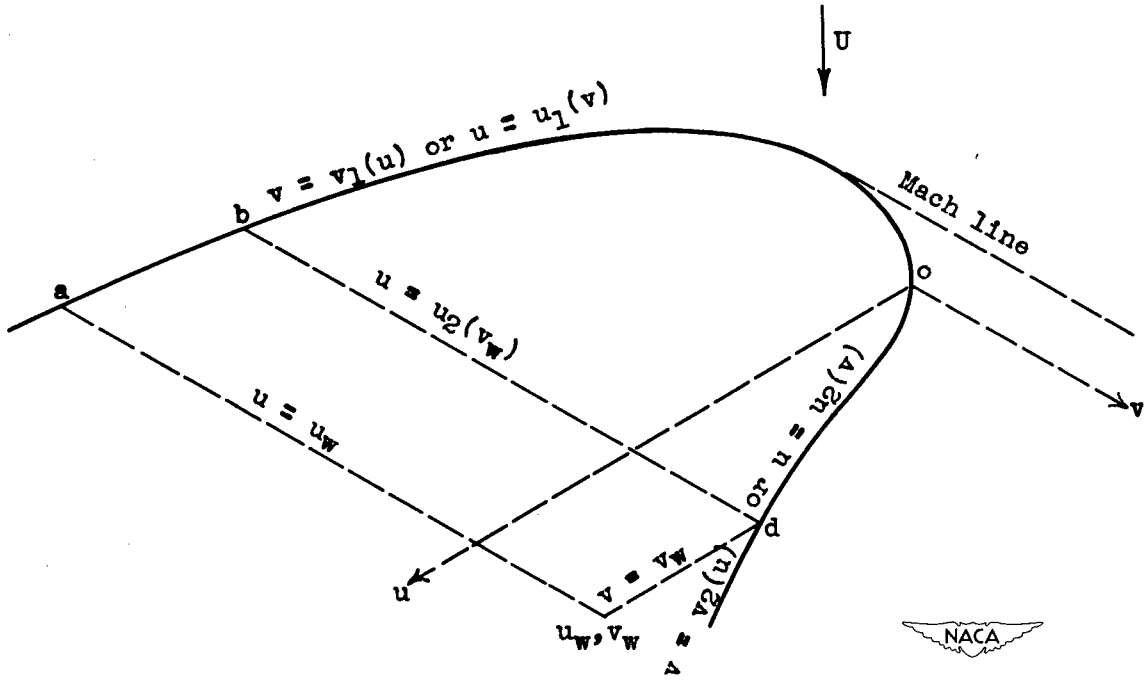

(f)

Figure 4. - Concluded. Integration boundaries for evaluating velocity potential in regions influenced by subsonic trailing edges.

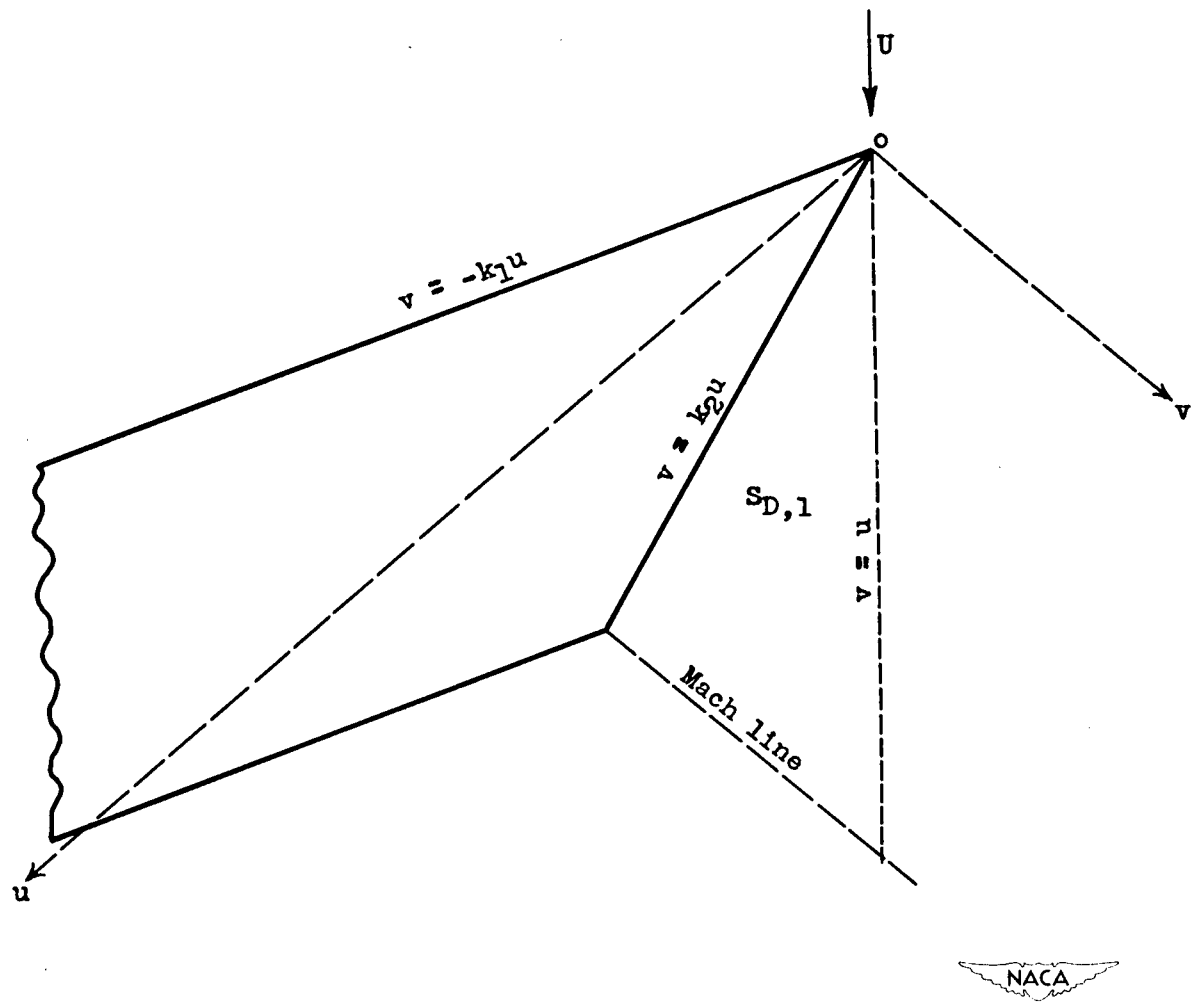

Figure 5. - Notation for swept trapezoidal wing.

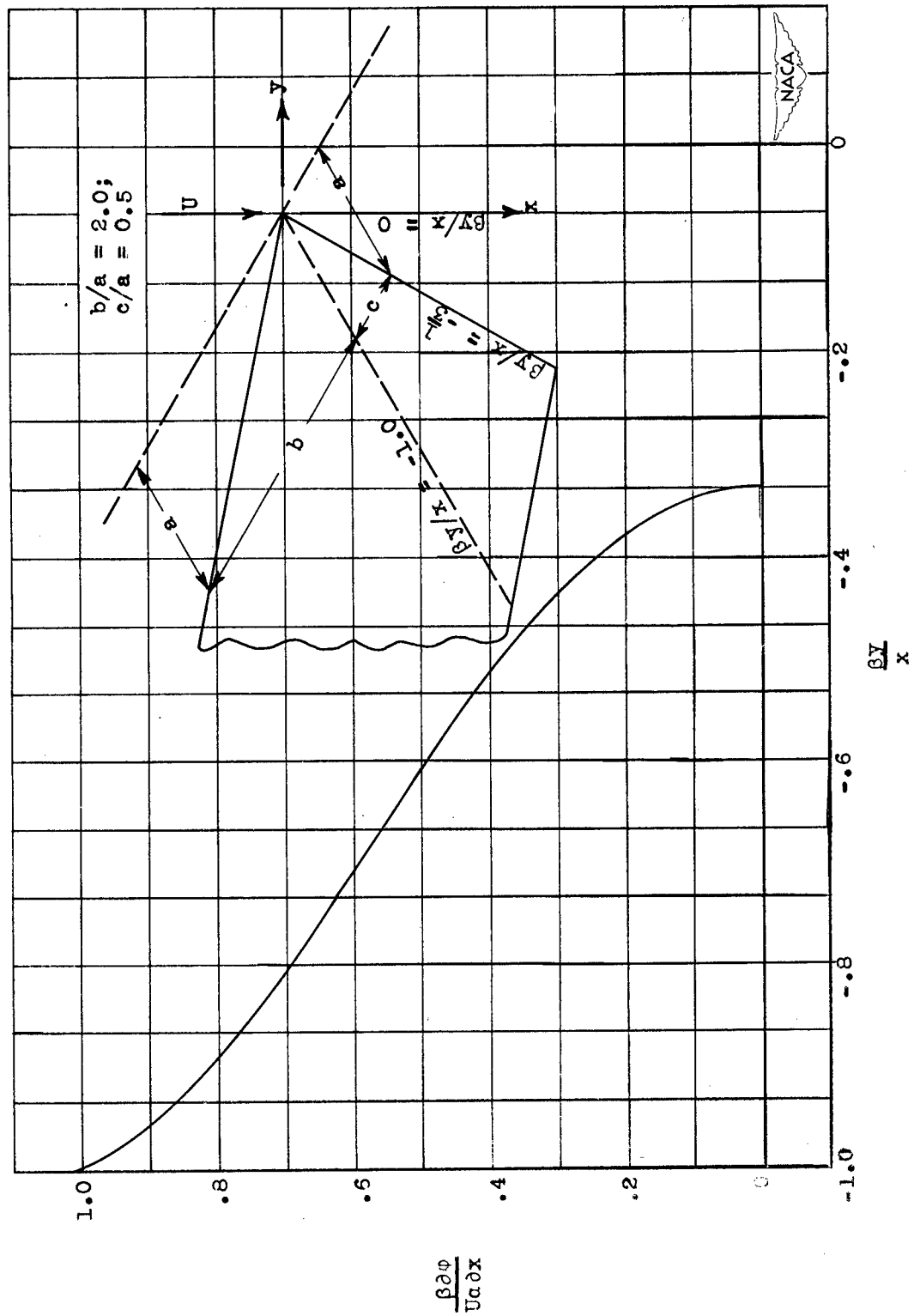

Figure 6. - Variation of x component of perturbation velocity in plane of wing near tip of swept trapezoidal wing.

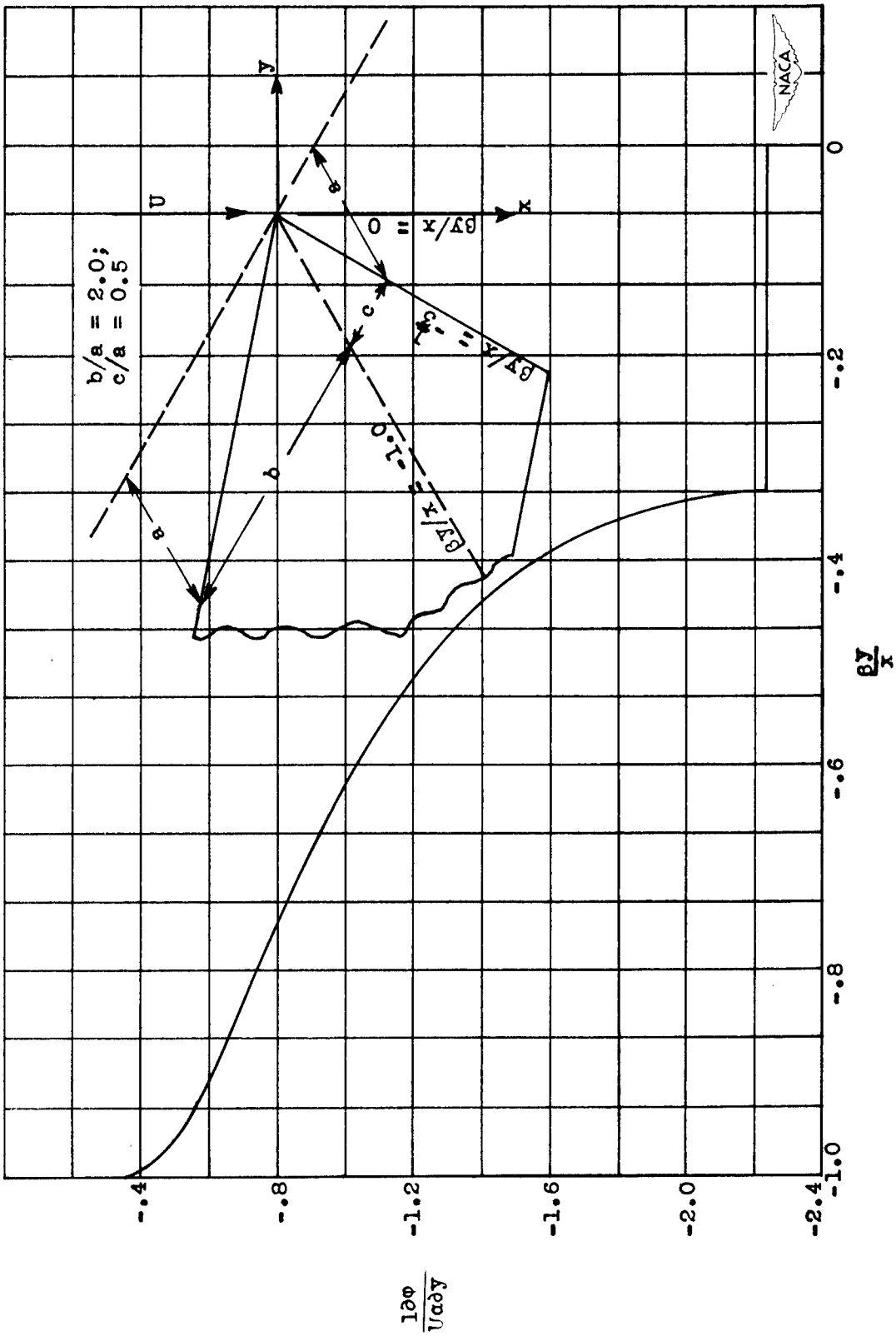

Figure 7. - Variation of y component of perturbation velocity in plane of wing near tip of swept trapezoidal wing.

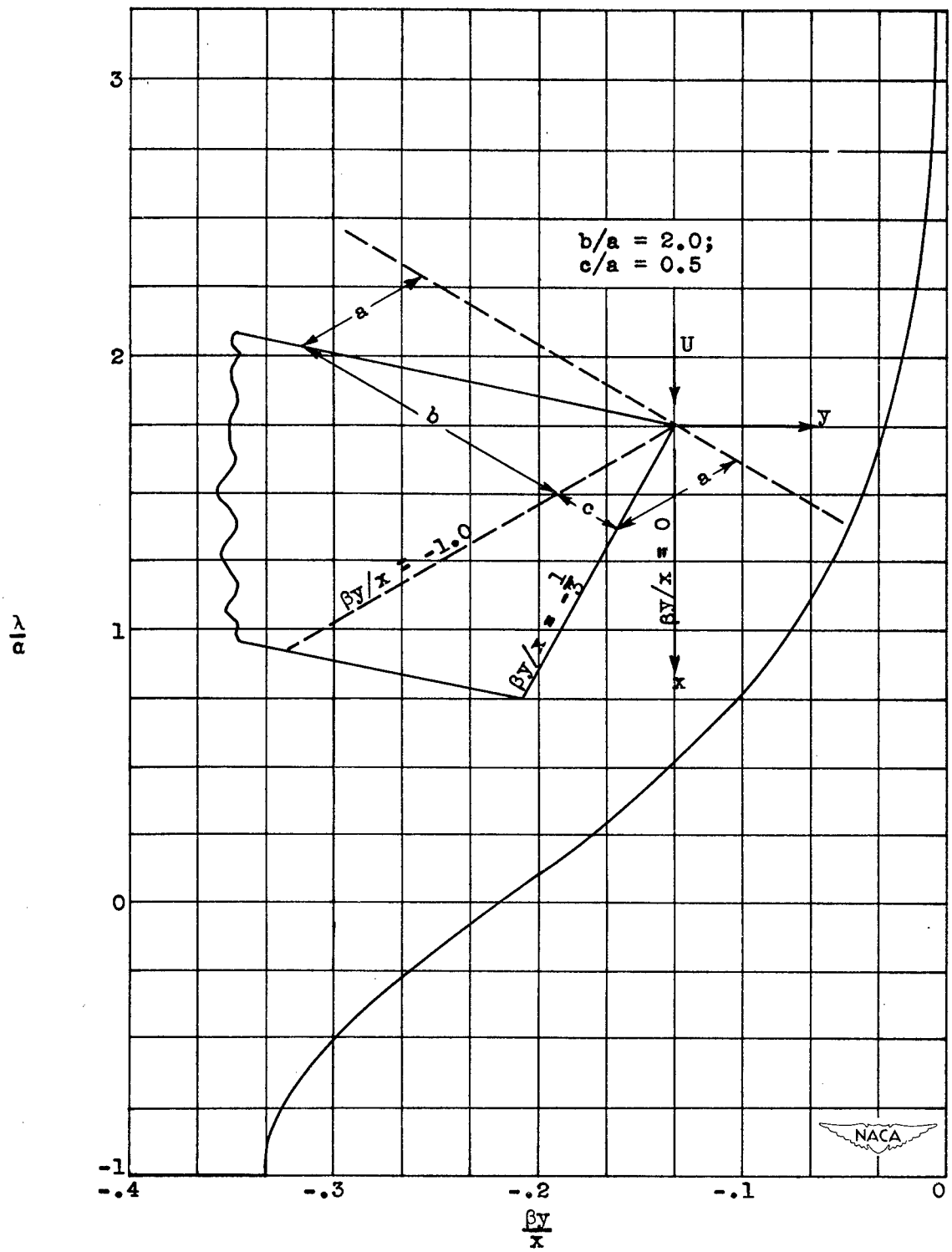

Figure 8. - Variation of slopes of streamlines in plane of wing near tip of swept trapezoidal wing.