0010

Proceedings

THE 1983 SPC/IREAPS TECHNICAL SYMPOSIUM

VOLUME II

SHIP PRODUCTION COMMITTEE/INSTITUTE FOR RESEARCH AND ENGINEERING FOR AUTOMATION AND PRODUCTIVITY IN SHIPBUILDING

Improving Shipbuilding Productivity

AUGUST 23,24,25,1983
THE WESTIN HOTEL-COPLEY PLACE
BOSTON, MASSACHUSETTS

Report Documentation Page

Form Approved
OMB No. 0704-0188

1. REPORT DATE **25 AUG 1983**	2. REPORT TYPE **N/A**	3. DATES COVERED **-**
4. TITLE AND SUBTITLE **Proceedings The 1983 SPC/1REAPS Technical Symposium: Improving Shipbuilding Productivity Volume II**		5a. CONTRACT NUMBER 5b. GRANT NUMBER 5c. PROGRAM ELEMENT NUMBER
6. AUTHOR(S)		5d. PROJECT NUMBER 5e. TASK NUMBER 5f. WORK UNIT NUMBER
7. PERFORMING ORGANIZATION NAME(S) AND ADDRESS(ES) **Naval Surface Warfare Center CD Code 2230 - Design Integration Tools Building 192 Room 128-9500 MacArthur Blvd Bethesda, MD 20817-5700**		8. PERFORMING ORGANIZATION REPORT NUMBER
9. SPONSORING/MONITORING AGENCY NAME(S) AND ADDRESS(ES)		10. SPONSOR/MONITOR'S ACRONYM(S) 11. SPONSOR/MONITOR'S REPORT NUMBER(S)
12. DISTRIBUTION/AVAILABILITY STATEMENT **Approved for public release, distribution unlimited**		
13. SUPPLEMENTARY NOTES		
14. ABSTRACT		
15. SUBJECT TERMS		

16. SECURITY CLASSIFICATION OF:			17. LIMITATION OF ABSTRACT	18. NUMBER OF PAGES	19a. NAME OF RESPONSIBLE PERSON
a. REPORT **unclassified**	b. ABSTRACT **unclassified**	c. THIS PAGE **unclassified**	**SAR**	**479**	

Standard Form 298 (Rev. 8-98)
Prescribed by ANSI Std Z39-18

IITRI

Ship
Production
Committee

&

Institute for
Research and
Engineering for
Automation and
Productivity in
Shipbuilding

PROCEEDINGS

The Westin Hotel
Copley Place
Boston, Massachusetts

August 23-25, 1983

PREFACE

IREAPS is an independent not-for-profit membership corporation founded in April 1981 to direct the 10 year-old REAPS Program. The IREAPS Program is a U.S. shipbuilding industry/Maritime Administration cooperative effort whose goal is the improvement of shipbuilding productivity through the application of computer aids and production technology.

The Tenth Annual IREAPS Technical Symposium, held August 23-25, 1983 in Boston, Massachusetts, represents one element of the IREAPS Program which is designed to provide industry with the opportunity to review new developments in shipyard technology.

The Symposium highlighted all aspects of the National Shipbuilding Research Program (NSRP) in that presentations were made by all the panel chairmen of the SNAME Ship Production Committee.

The 1983 IREAPS Technical Symposium Proceedings contain the papers presented at the meeting. The agenda in Appendix A indicates topics and speakers; Appendix B is a list of symposium attendees.

Many thanks to all those who have contributed to the success of this year's Symposium.

Pamela M. Slechta

Pamela M. Slechta
General Chairman
1983 IREAPS Technical Symposium

1983

IREAPS Organization

Officers and Staff

Dave V. Pearson	President
Don Spanninga	Vice President
Maryann Laughton	Secretary
Jan Erickson	Treasurer
Edmund R. Bangs	Executive Director
Pamela M. Slechta	Marketing Specialist
Linda M. Bender	Project Engineer
Margarita A.Hernandez	Librarian
Carol J. Sessions	Editor
Raymond Vitkus	Senior Technician

Board of Directors

Ollie H. Gatlin
Avondale Shipyards

Jan Erickson
Bath Iron Works

Dave V. Pearson
General Dynamics

Jess Brasher
Ingalls Shipbuilding

Francisco San Miguel
McDermott, Inc.

Don Spanninga
National Steel and Shipbuilding

Ellsworth L. Peterson
Peterson Builders, Inc.

Lennart M. Thorell
Todd Pacific Shipyards

TABLE OF CONTENTS

TABLE OF CONTENTS (continued)

A Floor Space Simulator for Shipyard Steel

S. M. Knapp
Senior Planning Associate
SPAR Associates, Inc.
Annapolis, MD

As a Senior Planning Associate with SPAR Associates since 1979, Mr. Knapp continues to serve client shipyards with their individual advances in the use of automated planning, scheduling, and cost control requirements. With numerous years of experience in the fields of computer science and shipyard planning and scheduling, Mr. Knapp‘s expertise includes master planning network development, and cost/schedule controls. He is currently developing the Floor Space Simulator/Allocator system in conjunction with a client yard.

The 1983 IREAPS symposium is Mr. Knapp's fifth year as a speaker, continuing to present concepts relating to the development and use of planning and scheduling systems and methods.

ABSTRACT

A software package intended to aid planners in the evaluation, planning, and scheduling of steel unit placement within the confines of the yard is described. The Floor Space Simulator/Allocator system, or FSS/A, will allow the planner to structure the steel requirements from the unit level to six levels of subassemblies and components, and will simulate the time oriented placement of those units within a defined spacial area. Suitable provisions will be available for the planner to study pre-outfit requirements and alternative construction approaches, all within the realm of a real-time simulation.

This paper will present a discussion of the space scheduling problem, an overview of the FSS/A system, an assessment of simulation versus the actual yard, an evaluation of the benefits to be derived by the yard, and a general description of the planner's use of the system to solve the space ordering of steel units.

A Floor Space Simulator for Shipyard Steel

Just as steel forms the structure of the vessel, steel related activities form the backbone of the planning efforts needed by production and the yard. The accurate planning and scheduling of steel workorders, from material procurement through final paint, is essential and becomes the focal point of management inspection. Such workorders, to those who can interpret their meaning, contribute strongly to the assessment of cost and schedule control criteria.

But the required planning and scheduling of steel often confounds the yard, reduced to playing with "paper-doll" cutouts of individual units, meticulously placing them onto scaled representations of the intended shop, platen, or panel line areas where they will, probably, be placed. While detailed planners have mastered this art rather well, due mostly to years of practice, the process continues to be slow and tedious. Working at the level of the floor, the planner is prone to forget the more intricate relationships of the steel in terms of the overall objective - the ship's construction plan.

Master planning and scheduling, now being augmented by more sophisticated computer tools such as PERT-PAC, deal with the ship at the primary production work level. Here, steel is represented at the erectable unit level (most likely), ad-

steel, their objective being the optimal placement of part contours within the confines of a plate's dimensions. A good space allocation system, however,, must have the following properties:

- It should address minimum schedule requirements and constraints.
- It should replicate, as best as possible, the thinking of the steel planner during steel space evaluations.
- It should simulate steel movement by crane or truck so as to pin-point transportation problems.
- It should allow the planner to experiment with alternative steel placement.
- It should contain suitable elements to simulate the construction process, including cutting to parts, merging to assemblies or subassemblies, panel line flow, and unit rotation.

In addition, such a computer system should enable the planner to visualize the space easily to recognize conjestion and to relate the resultant space schedules to the master plan and schedule.

Such is the design of the Spar Associates Floor Space Simulator/Allocator system, or FSS/A.

The Floor Space Simulator/Allocator system is a computer software package designed to assist planning personnel in the analysis and assignment of floor space resources. The system can track and simulate the placement of an unlimited number of activities into a maximum of 500 spaces, all of which are simulated simultaneously. The system communicates with the user in a transaction oriented format, giving the planner

extensive control over the data structures and affording clear, precise error detection and reporting.

The system is an on-line, interactive computer program designed to assist planning personnel in the analysis, planning, and scheduling of discrete time-oriented events to any physical space area. The time events are referred to as "activities," each of which has a finite, three-dimensional volume, represented in terms of linear coordinate dimensions. These are referred to as the X, Y, and Z coordinates.

Not all activities need consume space. Some may be defined with duration only so as to consume time. Such arrangements are most suitable to parallel work, such as the pre-outfit landing of a pump to a steel unit. Here, the steel consumes both time and space, while the pump "work" is parallel to that steel. The nature of the FSS/A simulation insures that the pump remains with the steel, should the latter be forced to move in time (schedule) do to any constraint.

A space is considered to be any rectangular, physical area, into which the activities will be loaded by the simulator. It is represented by its X-dimension "length", Y-dimension "depth", and Z-dimension "height." Each space may be subdivided into subspaces, each of which maintains its own X, Y, and Z sizes. Only required subspaces need be defined to the FSS/A. Any remaining area in the total space not designated as a subspace is considered as a "general subspace" for allocation purposes.

SIMULATION

The system simulates the entry, construction processes, storage, and departure of all designated activities. The motions and timing requirements are established by the user. The system uses an internal Clock and Calendar to advance activities based on their assigned construction durations, taking into consideration such requirements as subassembly to assembly relationships, 'schedule demands imposed by external sources, and the intended actual placement of the activity within the space.

By proper definition of the space, relative to the real-world space being represented, the system reproduces the actual construction steps based on user-initialized sequences and process priorities.

Simulation determines:

- The order of activity placement
- The earliest date/time that the activity can be placed
- Where the activity will be placed,
  - considering movement constraints
  - considering alternative placement locations
  - considering user-imposed restrictions
- How long the activity will reside in the space
- How to remove the activity after it is "completed"

ALLOCATION

The process of allocation surrounds the simulation aspects of the system by a continual analysis of activity start sequences, dependencies on other activities, space loading considerations, and the eventual setting of real-world start and complete dates. Allocation further encompasses the interaction of the FSS/A with other, external systems so as to allow the scheduled activities to influence other construction requirements outside of the space.

For example, scheduled activities from the FSS/A will be automatically directed to dependent activities in the PERT-PAC networking system.

An activity represents some physical entity which is required to occupy a finite area for some determined period of time. It has three dimensions: length, width (or depth) and height. An activity can also be given a weight if lifting capacities must be considered by the user.

Each activity required of the system is contained in a single data record on the FSS/A data base. To differentiate it from other activities, it is assigned a unique number, within the range of 1 to 99999.99 and is further assigned to an overall project, the project number ranging from 1 to 99999. Therefore, the simplest definition of an activity consists of a project number and an activity number.

The FSS/A system, however, is designed to accommodate more complex arrangements of activities. This allows the system to simulate the decomposition of activities to represent raw stock cutting for component creation, or the gathering of activities together to form higher-ordered activities (sub-assemblies or assemblies).

To facilitate such relationships, the FSS/A uses an "activity structure" which permits the user to define more complex arrangements of activites. Thus, the simple activity number mentioned in previous paragraphs is augmented with a "subactivity number" which provides for the assignment of an activity hierarchy structure, and a "work item" number to allow for a virtually unlimited range of detail components to support any activity/subactivity.

Both the subactivity and the work item numbers are limited to a range of 0 to 999999. The following pictorial demonstrates the activity structure with its levels.

```
          AAAAAA      SSSSSS                Hierarchy
                                  -------------------------------

Level 0   127         0                     127/0
                                              !
                                  +----------+---------+
Level 1   127         1           !           !
          127                   127/l       127/2     127/3
          127         3           !
                                  !
                                  +---------------+
Level 2   127         11          !                 !
          127         12        127/11          127/12
                                                    !
                                            +-------+-------+
Level 3   127         121                 !       !       !
          127         122'            127/121 127/122 127/123
          127         123
```

Understanding this structure is very important when assessing the hierarchy impact of the MERGE and SPLIT capabiities of the system. Also, in-space unit transfers use a "father/son/brother" arrangement of activities/subactivities for subsequent unit designations.

For each activity in the system, the user may define the following attributes.

Length	Width	Height	Weight
Center(*)	Package(*)	Description	1st Duration
2nd Duration	Lead time	Slack	Calendar number
Shift hours	Days-per-week	Priorities	Sequence
Flow(2)	Planned start/finish dates		Buffer(2)
Stack code(3)	Actual start/finish dates		Block/zone
Cost group	Cost account	Unit(*)	Alert code
Actual time	Rotation		

(*) =For interface to other SPAR systems.

(2) = FSS/A phase 2 development

(3) = FSS/A phase 3 development

The work item number provides a third dimension to the development of data for any given level. That is, each activity within the system can carry another 999,999 detailed, schedulable components. At that level, however, there is no structuring. For example,

```
Level 0          1451.1

Level 1          1451.1/1
                     !
Level 2         1451.1/11         1451.1/11/l
                    1              1451.1/11/2
                    1              1451.1/11/3
                    !                   !
                    !
                    !               1451.1/11/999999
                    !
Level 3         1451.1/111
```

The work item is most useful for the incorporation of preoutfit work to the space allocation of the primary unit. The work item is not directly scheduled by the system, but receives their schedules after the parent activity is scheduled. The durations of work items under a single parent are summed and compared to the parents (scheduled) duration. That ratio is then used to "spread" the work items under the parent's schedule.

Space/Subspace/Mask Definitions

A "space" is defined as a three dimensional area (the height can be unlimited for "open sky" areas) into which the activities will be loaded. Each space is numbered between 1 and 500 and is defined by its "Upper Left Hand Corner" X-axis and Y-axis coordinate (always 1,l). Each dimension is given a length of non-descript units, which the user may interpret as any length measurement, such as FEET, METERS, INCHES, etc.

A subspace, if defined, must be wholly contained within the space. The subspace number is between 0 and 99 and is defined with the same parameters as the space. Length measurement units for any space within its parent space must be the same.

Representative Pictorial of a Space

```
                 +- - - - - - - - - - - - - - - - -
                ' !
               // ;
              /   !
             /    !
            + - - - - - - - - - - - - - - - - - - -
            !      !
            !
            !      !(ULHC)
            !      + - - - - - - - - - - - - - - - -
Z-axis      !     /
(height)    !    /
            !   / Y-axis (depth)

            ! /
            !/          X-axis (length)
            +-----------------------------------
```

SUBSPACES

Subspaces are defined for the purposes of 1) allowing the assignment of activities to specific coordinates within the space, or 2) excluding certain activities from these coordinates. The inclusion/exclusion is accomplished via the space sequence number assigned to the activity. This number, which may range between 1 and 999 points the FSS/A to the same-numbered record in the space-sequence file, where the simulator finds the list of spaces and subspaces where this activity may and may not be placed.

The subspace (as well as the space) is defined to the system using a simple definition command and the only basic difference between a space and one of its subspaces is that the subspace must be wholly contained within the space, considering its length, width, and height. Subspaces may be given differing lifting capacities.

As with the space, the subspace is viewed from its Upper Left Hand Corner, with the user looking "down from above."

NESTING

Subspaces may be nested, such as:

```
      SPACE +-------------------------------------+
            ¦                                     ¦
            ¦  Sub1 +-------------------------------+
            ¦       ¦                               ¦
            ¦       ¦  Sub2 +--------------+        ¦
            ¦       ¦       ¦              ¦        ¦
            ¦       ¦       +--------------+        ¦
            ¦       ¦                               ¦
            +-------+-------------------------------+
```

Subspaces may overlap, such as:

```
     SPACE  +-----------------------------------+
            ¦                                   ¦
            ¦                 Sub2 +-------+    ¦
            ¦                      ¦       ¦    ¦
            ¦         Sub1  +-------+-------+----+  !
            ¦               ¦       ¦       ¦    ¦  ¦
            ¦               ¦       ¦       ¦    ¦  ¦
            ¦               +-------+-------+----+  ¦
            ¦                       ¦       ¦       ¦
            ¦                       +-------+       ¦
            +-------------------------------------+
```

Nesting and overlap are functions of the subspace's Upper Left Hand Corner (or ULHC) and their dimensions. Nesting does not consider the subspace number, as was done with the activity structure.

MASKS

A mask is basically a subspace which is restricted from all activities. It is presented to the FSS/A via the DEFINE command, and like subspaces, is given height, length, and width dimensions. There is no lifting weight capacity for a mask.

As with subspaces, masks may be nested and may overlap. Masks are numbered from 1 to 999. Note, however, that a mask is a permanent blockage for the entire simulation run.

Example of a mask

```
SPACE  +--------------+-------------------+
       !XXXXXXXXXXXXXX!                   !
       !XXXXXXXXXXXXXX!                   !
       +--------------+                   !
       !                                  !
       !                                  !
       +----------------------------------+
```

Simulation Techniques and Queues

The FSS/A utilizes discrete time elements to determine "where" it is for the placement of activities. From the current value of the date/timer, the system conducts the varied simulation aspects, continually monitoring each activity to determine the next-earliest date that something will occur. This is call the Next Event Date. Inclusive dates, those being between the current date/timer and the NED, are skipped since no simulated actions are required within those date ranges.

On occasion, the NED will be computed to a date earlier than the current date/timer. This may occur during merging operations, as the NED is used to track the latest completion date of merging activities. If all activities are completed, but the target cannot begin for some other reason, the NED gets an apparent "bad" date. However, the system will not suffer due to this situation, it merely uses an additional iteration to recover the NED to the proper date by inspecting the queues for the next event date for the iteration.

After any single iteration, the NED becomes the current date/timer, the NED field is cleared, and the next iteration of the FSS/A simulation proceeds.

QUEUES

The "queues" of the system are used to control the operations of the simulation in terms of the readiness of the activities. Activities are "assigned" to queues merely by the setting of one of the many data fields on the activity's data base record. This field is then changed as the activity moves from queue to queue.

STAGING Queue: This is queue number "O" and represents the original input data from the user. It is used as the gross area and the activities are stored on project, activity, subactivity, subsubactivity number order. The RESET command can return activities from any queue to the Staging Queue based on the DATE field of that command.

DEMAND Queue: Based on the date/timer and the demand "window." activities are moved from the staging queue to the demand queue. The demand queue contains those activites which are "demanding" the space. Activities move to the Demand queue from one or more of the following criteria:

1. Their planned start date is within the window, usually the date/timer plus 80 working hours.
2. A source activity has cleared the activity to the Demand Queue, it being the target of a split, merge, or transfer operation.
3. The user entered the STEP mode and commanded a LOAD of the activity, thus placing it onto the Demand Queue.

RELEASE Queue: When space is available to accommodate the activity, it is moved from Demand to Release. The Release queue represents all activities currently loaded to one of the spaces in the simulation. When moved to Release, the activity is assigned its loading coordinates and space number. Activities will remain on the Release queue until they have consumed their duration, or until cleared to the Buffer queue by simulation criteria, such as merge complete operations.

BUFFER Queue: This represents those activities which have been removed from the space after the normal course of their duration or as directed by the user in STEP mode with the UNLOAD command, Schedules of activities on the Buffer Queue are those derived by the total simulation process.

HOLD Queue: This is an auxiliary queue where activities can be placed by the user to "get them out of the way" of the normal simulation process. Thus, proposed or non-critical activities, normally on the standard processing queues of the system, can be temporarily placed "on hold" until needed. The RESET command with the HOLD option can be used to return these activities to the Staging queue.

USE Queue: This queue holds activities which represent the best case analysis of the user in terms of when the matching activity on the standard queues are to start and finish. It is a "matching" queue which is compared to the Buffer Queue during the VALIDATE function to determine if the simulated dates are in alignment with the overall planned dates as derived by the user or external system. Here, dates are checked and slack comsumption compared to determine how well the FSS/A system performed against other, user definable, criteria.

Simulation versus the Real Yard

A principle problem with the use of computerized planning tools is the potential of dealing solely within the realm of the software, removed from the production operations of the yard. It is vitally important that any planning tool be devised to react to the real-world of the yard. To facilitate this requirement, the FSS/A (as with all SPAR planning sys-

tems) can receive real-yard statusing of the individual steel activities, which can be used to influence the simulation.

For example, should a shop foreman decide to place an activity at shop coordinates deviating from those derived by the simulation, the planner can advise the system of that fact. The system, now instructed to use this information, could generate a completely different space loading profile, subjecting the space to, 'possibly, a conjestion in utilization and its resultant activity schedules.

As with placement coordinates, the FSS/A can also receive actual (physically assessed) progress, consumed duration, actual start and complete dates, and so on. At the planners discretion, these figures may or may not be used to re-evaluate the space loading, depending upon need.

Benefits

There is little need to attempt a complete cost justification for a system such as the FSS/A. With a complete interaction between master plan and the shop detailed loading plan, the yard stands to gain immeasurably. Subjective benefits include:

- Improved human communications between steel shop planners and any master (central) planning organization.

- Down-range visibility of shop impact generated by potential vessels under bid by estimating and contracts.
- Potential steel unit re-orientation, to place a unit, can lead to improved production engineering.
- Improved shop flow-through due to more efficient utilization of available space.
- Improved visibility into space impact caused by pre-outfitting.
- High-speed re-scheduling of the shop.

The use of the system has been devised based on the designer's knowledge of the varied client shipyards. As with all SPAR planning systems, command structures are simple, and wherever necessary, somewhat redundant. This permits data base modifications to be made from numerous points, reducing the overall number of commands that the planner must enter to fully define the data. Furthermore, understanding that planners are not data-entry clerks, some data can be globally defined to the system and the system enters that data automatically to the defined activities, eliminating the need for extensive typing. Finally, error detection if made at time of the command entry, reported to the user in a clear, precise manner so that erroneous data entries do not come back to haunt the planner during the simulation process.

The messages, whether notices, warnings, or errors, are presented to the user from an external data base file. Thus, any spoken language can be used for those messages. At present, the FSS/A messages file is available in either English or French.

This paper was prepared with the intentions of describing, in sufficient technical detail, the design of the FSS/A system. As of July 1983, the system is well into its development phase 1, with an anticipated availability to the shipbuilding industry by early October 1983. The concepts incorporated into the system reflect the adaptation of the latest state-of-the-art computer techniques and the FSS/A has been developed for speed and accuracy.

COMPUTER APPLICATIONS IN A BUILDING AND REPAIR YARD
TWO YEARS OF LESSONS

R. Lovdahl
Head, Scientific Section
Todd Pacific Shipyards
San Pedro, CA

Mr. Lovdahl graduated from the University of Michigan in 1978 with a Bachelors Degree in Naval Architecture and Marine Engineering and moved to the Wesst Coast to work at the Long Beach Naval Shipyard in the Structural Design Branch. In 1980 he left the Naval Shipyard and went to Todd Pacific Shipyards, Los Angeles Division. He is now the Head of the Scientific Section and is also responsible for Todd LA's Computer Aided Design facilities. He is a member of the Society of Naval Architects and Marine Engineers and the National Computer Graphics Association.

Paul R. Cromer
Design Engineer
Todd Pacific Shipyards Corp.
San Pedro, CA

Mr. Cromer attended the New Mexico Institute of Mining & Technology at Socorro for two years and in 1966 entered the Apprentice Program at Long Beach Naval Shipyard, graduating as a Journeyman Marine Electrician in 1970. Six years later, he entered the Shiyard's Design Division as an Engineering Drafter. He became a Design Engineer at Todd's LA Division in early 1981.

Cromer is self-educated in naval architecture, mechanical engineering, computer programming, applied mathematics and technical writing. He has written and presented several papers over the last five years to SNAME, ASNE and other organizations. Two of his papers have been published in the SNAME quarterly journal, Marine Technology.

ABSTRACT

This paper describes the evolution of, and experience with, a medium-size data-processing system over a two-year period in a West Coast shipyard. The introduction provides a brief sketch of previous data-processing experience at the yard. Major requirements summarizes the five major areas of computer applicability: Engineering, Database Management, Graphics, Planning and Procurement. A third section, milestones, describes the early goals, present achievements and future tasks of the data-processing system. System description discusses the system hardware (computers, terminals, etc.) and software (programs). System selection, site preparation, training and interation of software are disucssed in the Other Considerations section. The paper closes with a Summary and Conclusions.

Introduction

Todd Pacific Shipyards Corporation has been increasingly involved. in Computer-Aided-Engineering since 1963. In the 1970's Todd Shipyards became one of several U.S. Shipbuilders to use the Autokon system for hull fairing and generation of N/C Plate cutting information.

Until fairly recently? numerical control (N/C) was the only non-business use of computer technology in most American Shipbuilders. In past times computer hardware has been very expensive and not very cost effective for use in day to day design and Production support. The reduced cost of acquiring computers has been perhaps the largest economic factor in placing this technology in the shipyard environment. With the appearance of the newer, low cost, high performance minicomputer, cost effective ways of using computers have surfaced in many areas. Development has accelerated rapidly in the Past three years. The reasons for this rapid development are many. In addition to the lowered cost of computing resources emphasis has been placed upon more efficient Pre-outfitting techniques which require more accurate planning, scheduling material management, and more sophisticated management information feedback and analysis.

Computer Applications in a Building and Repair Yard

Design and Production departments need to be more closely integrated in order to meet the compressed schedules that result from a commitment to extensive Pre-outfitting. Computer-Aided-Design is seen as a tool to aid in that integration.

Computer-Aided-Engineering refers to more than simply electronic drafting. If used intelligently, computer technology can enhance many Phases of the ship design and construction Process. Techniques such as Database Management, CAD/CAM, interactive scheduling and automated analysis can be used concurrently to substantially increase shipbuilding Productivity.

F U N C T I O N A L R E Q U I R E M E N T S

The system selection was determined by the functional requirements of the following major categories:

o Computer-Aided-Engineering (CAE)

This was a Primary requirement. Several areas generally considered to be CAE were identified as needed. 3-D modeling, automated drafting, structural analysis, hull form development, stability and mass properties analysis are some of the capabilities that were to be developed and integrated.

Computer Applications in a Building and Repair Yard

In conceptual and preliminary ship design the driving considerations are rapid and accurate development of technical information. A system architecture that was amenable to integration of existing software was desired. One of the expected byproducts of CAE was reduced paperwork. Configuration Control can be more effectively maintained in a digital database than a conventional paper one. Closer working relationships with the production environment needed to be maintained.

o Planning and Scheduling

Planning and Scheduling accurately for such an immense project as ship construction has always been a difficult task. Recent emphasis on maximum pre-outfitting has demanded even more from the planning department. The existing company business computer had been used since the 1960's to run critical-path-method analysis on key events in the construction schedule, but that batch process proved difficult to update for small changes. An interactive system was needed which could be changed *quickly* and would show resulting impacts on the entire project. "What if ?" type analyses could be used to anticipate and counter events which might adversely impact the construction schedule, In addition, schedules tend to be tighter when pre-outfitting is emphasized and material availability is more critical with so much more of a ship's construction going on in

Parallel as compared to older ship construction methods. All of these situations Point out the need for a responsive and accurate scheduling system.

o **Management Information Systems**

The ever increasing amount of information that must be Processed in a modern shipyard is staggering. Tracking and reporting on Production Progress, Material Status, Change Control. Configuration Controls and Weight Control are all applications that can greatly benefit from sophisticated database management techniques. Management information is gathered by and from virtually all departments in the shipyard and there is a need for a common thread to tie all this different data together. In the past this was accomplished by each different department in its own separate way and without much regard for the fact that some work was being duplicated by another department- This was in some ways a necessary evil. There simply was no Practical way of bringing it all together other than being familiar with the various *reports* issued by each group. Certain reports are specified by the customer, the Navy in our case, but that is but a small part of the total Picture.

Interactive Database Management is one way to achieve that common thread for control of the volume of information that a

major construction project generates. To have a truly integrated computer system means to integrate more than just the Engineering graphics and N/C Manufacturing. The new Todd system was to have a carefully chosen Database Management System which must be powerfull yet not so complicated as to make it necessary for specialized programmers to develop, change and update new applications.

Three areas that require particular care in integration, Material Management and Procurement3 Production Progress Tracking, and Engineering Configuration and Change Control, were the first to *receive* attention.

o Administrative Support

Under this heading fall a large number of small things that together can have a tremendous impact on Productivity in the administrative area. Obviously Word Processing is included whenever we speak of Administration. Word Processing capability was considered in two ways. There were those that argued that Word Processing support should be separate and not confused by being tied to the central computer system. Others argued that Word Processing had a lot more power if it was an integral Part of the company's computing resources. Both arguments have merits.

Other aspects of Administration require handling of

information that is not simple text. Tracking in-house drawings, technical documentation. library books:. Personnel information, correspondence and other material is difficult to monitor by using the usual check out sheets and file cabinets. Database Management can be implemented here as well as in Management Information Systems. These resources must be accessible by all departments to be of maximum benefit.

Milestones

o Where We Started

The first phase of Todd's new computer capability began to take shape in 1981. A matrix of requirements had been developed and software to satisfy those requirements had been investigated. The computer that proved to be the common denominator in the requirements equation was a Prime-750. This type of computer *is* commonly called a Super-Minicomputer or a Midicomputer since its capabilities are higher than previously available minicomputers and the Price is far less than that of comparable mainframe-type computers. Along with the various hardware elements of the system ordered, several software Packages were installed. Much 'of the currently available Autokon system was installed along with Prelikon, the system for preliminary engineering of a ship design, which was jointly

development by Shipping Research Services and Det Norske Veritas. AD-2000 Computer Aided Design and Computer Aided Manufacturing (CAD/CAM) software was installed also Vision, a sophisticated system for scheduling and planning analysis was installed for use by the Planning department and Management Information Systems department, A powerful database manager, INFO was installed along with (and compatible with) Vision. Several applications which bad previously been run on outside computer resources were converted for in-house operation on the Prime.

Various other pieces of hardware were installed to complement the graphics capabilities of the engineering and planning software tools. A large flatbed plotter was installed that could be used for engineering drawings, planning diagrams and charts and production templates that the Mold Loft may required Several high-resolution graphics terminals were installed for use with Autokon and AD-2000.

A facilitv was constructed to house the new equipment in a location adjacent to the new engineering department. This new facility was dubbed the "Technical Data Center" (TDC) to distinguish it from the existing Data Processing Department which handled all of the business computing and the material control system at that time. The Technical Data Center was constructed as three rooms. One room housed the flatbed plotter, One housed the computer and its peripheral equipment

and the third room was built as a graphics workroom. The graphics workroom was designed with twelve workstations which could be used for various Purposes. It was here that the initial graphics terminals were located. This would make the startup and initial training Period more rapid. Operators could help each other more easily if they were located close together. Eventually. as more operators were trained. workstations could be located in other locations closer to the workforce.

Since the hardware was to arrive and training was to begin before the completion of the new facility. it was decided to install the computer temporarily in the existing computer room that the Data Processing Department maintained. A small number of terminals were connected to the Prime for system development and training. In this way, by the time the Technical Data Center was completed, there would already be a core group of operators up to speed on the system's use. This Proved to be a very worthwhile decision.

o Where We Are

People grew accustomed to the new tools they were handed very quickly. There were some that still thought computers were only good for printing paychecks and playing Pac-Man but they were a decreasing minority. One reason for the rapid acceptance was that the first applications tackled with the computer were

relatively low-risk areas. Well proven, "canned" programs were used and in-house developed systems were encouraged only after the system had gone through a shakedown period. These initial applications served as a showcase of some of the capabilities that the new system possessed. As more terminals became available, more users began accessing the computer and system usage grew. Many applications that were not thought of at the time of initial system selection began to surface.

It is important to mention that the policy under which the technical computing facilities were operated was very different than that of the Data Processing (DP) Department. In the DP facilities. system usage is limited to a small group of individuals and all new applications are strictly regulated by the department and developed by the DP department programmers. This was necessary because of the security of data on the system, the specialized knowledge that was required in order to properly develop, install and run programs, and because DP system was primarily "batch" oriented. The DP system did not lend itself to either many interactive users or users that were not specially trained in its operation.

The Technical Data Center was run as an "open shop" computing facility. Of course there were limitations on who would use the system, but once trained, people in the various departments were free to explore and develop tools to aid them

in their jobs.' The TDC staff was interested more in supplying technical support and guidance than strict control and regulation. This caused some problems, but by and large this was a successful arrangement. The most significant development here was that systems were developed by the people who manually performed the work at that time. This was instrumental in producing a very rapid automation of many previously tedious and troublesome procedures. If special programmers from the systems staff had been required to develop all application Programs, progress would have been at a much slower pace. There were simply not enough programmers to meet the demand for support. Standards for database applications were established and encouraged by the management. By adhering to these standards, integration of these user created programs became much easier.

In late 1981 our interactive graphics program, AD-2000, was upgraded to Anvil-4000. This was an enhanced and expanded version of its predecessor. Several capabilities were added with Anvil-4000 including IGES (Initial Graphics Exchange Specification) translation capability. This allows for transferring 3-D graphics models between dissimilar CAD systems.

At present there are two Prime computers at Todd-LA. The second unit was added to support a tool-issue control system which was patterned after a system installed at Todd-Seattle Div. The two computers are networked together to provide the

ability to communicate between functions on each unit. Communications has been a Priority in the on going efforts to integrate all computer usage. Communications hardware and software has been installed on both the pair of Primes and the company Honeywell computer used in the DP department. Links to other offices have been used now for the past two Years mostly to transfer text from one office to the next through various word Processors equipped with communications packages. This capability has Proven very valuable. Several large documents have been developed jointly between people at Todd-Los Angeles and people on the east coast. This Paper was prepared using the same capability due to the fact that the co-authors were three thousand miles apart. These communication links can relieve the normal dependency on mail service and accelerate turnaround *considerably*. When, in conjunction with the design process, graphical information and text is transferred this becomes a powerful capability.

0 Where We are Going

Future Plans include expansion of computing power through optimization and distribution of the Processing load to satellite computers which may be located in work centers in Engineering, Planning, Production Shops, or other departments. By networking the various computers together it will be possible

to distribute processing power where it is needed and still have control through a central hub computer.

In the areas of CAD and CAE emphasis is being placed upon developing a comprehensive databank of standards and training in methods of 3-D design techniques. Design in two dimensions will cease to be as standard methods of interactive 3-D graphics design gain Popularity. Already 3-D graphics are being used for developing models of ship hull block units to support the Pre-outfitting process. Previously this was done only for the structural components of these units, however:. now we have the ability to include distributed systems in a cost effective manner. Another technique that will benefit the design and construction Process is interference control. In situations that may have required the use of expensive mock-ups to resolve interference Problems, computer models in 3-D could be developed and utilized much more quickly and with less expense.

This 3-D modeling capability is being used now 'to develop re-useable docking cradles for a variety of ship tunes. This is in conjunction with the construction of a new ship-lift and land level transfer facility at Todd-LA.

In the area of Production automation, Robotics is a near and long term area of emphasis. In the long term, the remote programming of robotic work centers (as is done now with N/C machines) is expected. Robotics is an area of much research and

development at Todd, although at present all programming must be done at the work center using the robot itself. This is considered non-Productive time for the robot and if programming were possible remotely, Productivity would increase dramatically especially in the Production of piece parts.

For all departments integration is a continuing goal. The present plan is to integrate those procedures that are inter-related in the ship design and production Process now.

Computer Applications in a Building and Repair Yard

S y s t e m D e s c r i p t i o n

0 Hardware

- 0 (2) Prime 750 with 4Mb *core* memory-each and four 300Mb disk drives each
- 0 (2) Color high resolution raster terminals are used with Anvil-4000 software.
- o Tektronics monochrome high resolution terminals are used with Anvil-4000 as well as Autokon and other programs.
- o Gerber 16 ft. by 6 ft. flatbed Plotting table is used for all line Plotting purposes.
- o Summagraphics 42 in. by 60 in. digitizer is used in conjunction with several programs including Anvil-4000 and Autokon.
- o A multitude of alphanumeric terminals of different types are used throughout the shipyard for non-graphic computer applications
- o Several Printronix printer/plotters are used and are distributed around the shipyard in central locations.

Computer Applications in a Building and Repair Yard

0 Software

- 0 Autokon - The version of Autokon currently used is the core system of batch Programs which is sometimes referred to as Autokon-79.
- o Anvil-4000 - This is the graphics workhorse at -Todd. Anvil is used in the Engineering Department, the Mold Loft, and graphics are produced for Production Planning and Management Information Services. Although a general purpose interactive graphics system in nature. and not specifically developed for the shipbuilding industry, Anvil has Proven a powerful tool for use in the shipyard.
- **0 Info** - The Database Management System in general use at Todd-LA. Info allows heirarchial as well as relational Database structures and has a Powerful macro language. This high level *macro* language *is* what allows programming to be done by "non-Programmers", i.e., the people in the functional groups who are not formally trained in computer programming.

Computer Applications in a Building and Repair Yard

- **Vision** - A sophisticated interactive scheduling system which handles large networks, Produces all the necessary graphics on the system Printer/Plotters or on the Gerber flatbed plotter, and used INFO as its report writer. Vision is used extensively in New Construction as well as Repair Scheduling.
- **Huldef** - This program was developed by the Navy and is used for hull fairing. Huldef is capable of fairing hull lines and then transferring those lines to an Autokon database. We also transfer Huldef hull offsets to Anvil-4000 for use in constructing hull geometry.
- **SHCP -** Ship Hull Characteristics Program, also developed by the Navy, is used to calculate the hydrostatics for a given hull form.
- **Offsets** - A program used for digitizing hull offsets for use by SHCP.

- **RIM -** Relational Information Manager. Developed through the NASA IPAD (Interactive Programs for Aerospace Vehicle Development) program. Rim is a powerful Relational Database Management Program which may be used as a standard method of transferring information to and from the Navy in digital form.

Other Considerations

0 System Selection

The best advice to give in *terms* of hardware and software selection is to research your Particular functional requirements thoroughly and then select the software first. There are sometimes overriding criteria that constrain you to certain hardware for standardization or other reasons. Assuming that there are not, by selecting software that best suits your needs and then the hardware that it' runs on, the headache of conversion of Programs from one computer to another will be avoided. This Problem is also avoided by buying "turnkey" systems, i.e., buying hardware and software bundled together. There are sometimes Problems in communicating to other systems from a turnkey package but in some specific applications this Problem is lessening as vendors are realizing that

inter-computer communications is a necessity.

When selecting computer and software separately it is important to think big and anticipate growth as much as economically feasible. Unless growth is strictly controlled expansion beyond original Plans is normal. Growth is not necessarily bad as long as new computer applications are economically justified. System hardware sizing is usually difficult to nail down when faced with a hardware vendor who wishes to sell excessive hardware and a software vendor who wants his program to run as fast as Possible. So much of the hardware selection process depends on the type of work and the Projected system load that your facility will impose on the system. That system load is different at every installation. Try to contact another company that is doing similar work on similar equipment and find out how their system is sized.

0 Site Preparation

If medium or large scale computers are being installed it pays to pay careful attention to the location of the facility. Proximity to the people that will be using the facility is important. Acceptance depends to a certain extent on computer facilities being accessible. Consideration should be given to the selected site's Proximity to industrial activity, especially radiated energy such as military radar and large intermittent

electric loads such ad arc welding. In severe situations shielding may be required to Protect the computer facilities from such radiated energy. The computer room at Todd-LA has been designed and built as a Faraday cage. It is shielded by a grounded aluminum foil inner wall that was specified due to high level5 of radiation emitted by close military and commercial radar which were measured Prior to construction. Thought should also be given to how terminal data lines, if any, will be run from the computer room to the user worksites. In industrial areas electrical power may not be of sufficiently high quality to directly operate computer equipment. Usually the hardware vendor will gladly help in site selection and will recommend special power conditioning equipment if needed. Take full advantage of this type of assistance from the computer supplier as it may prove very worthwhile in preventing disaster at a later date.

In sizing room5 to house computer equipment, *allow* space for potential growth. It may be very expensive to expand later if not allowed for originally. Ventilation -and electric power capacity should also be sized liberally. Computer equipment consumes large amounts of power and pumps out considerable heat.

0 Training

Training is important on all levels of system usage. There

are special training classes for systems administrators, operators, development Programmers, users of various programs, data entry operators, and others depending on the size and diversity of computer system installed. The decision must be made as to which phases of training will be handled in-house and which will be handled by the harware manufacturer, the software vendor, or Perhaps an outside consulting firm. The first people most certainly will be trained by someone outside the company, be it the vendors or consultants. After the first users are trained, in many cases it is wise to set up an in-house training Program to conduct classes which are more specifically suited to the type of business that your company is involved in. This is very much dependent upon the people within your company that are trained first. At Todd-LA the first people that were trained to use the system became the trainers for subsequent apprentice computer users. At this time all user training is conducted in-house. Course materials, manuals, examples of Program use, and in some cases on-line instructions have been developed by Personnel of various departments who are major users of the facilities. One mistake that some companies make is to train more personnel than it is Possible to accomadate with the existing facilities. Why train forty CAD operators if you only have four workstations? This will only lead to discouragement when the surplus of operator5 cannot obtain any hands-on time

with the equipment. Those who do not get a chance to Practice will probably forget what they have learned in the expensive training class they were but through.

C o n c l u s i o n

This paper has Presented a brief survey of the applications that have been found for a medium-sized data Processing system oriented towards technical Processing along with some of the lessons learned in two years of use in a shipyard environment. The results thus far have been outstanding. Time has been significantly reduced for functions such as record keeping, document handling, developing accurate schedules, many engineering calculations, and so on. The resulting benefits of time savings can be utilized in many ways which might not have been initially obvious. Personnel1 who had previously spent most of their time keeping records and Producing reports on progress are now able to apply *their* full efforts to Productive work with the aid of computer support to handle reporting and analysis of data. In some areas we are able to work to levels of accuracy not Possible with manual methods. Some things such as 3-D modeling of ship systems were not feasible before, due to

time and complexity. The computer is an integral part of the way we do business today. There is still much room for improvement and as time passes it *is* fully expected that major advances will continue to be made.

.

PRODUCT MODELLING IN INTERACTIVE AUTOKON

Jorn Oian
Research Manager CAD/CAM
Sentral institutt For Industriell Forskning
Oslo, Norway

Mr. Oian holds a M.S.C. in electrical engineering from the University of Purdue. He has been involved in Computer Graphics since 1973. In 1975 he joined SRS and in 1977 he joined SI (The Central Institute of Industrial Research). He is now the research manager of CAD/CAM at SI and the main project leader for the new AUTOKON development program underway since 1977.

ABSTRACT

AUTOKON has for years been the most widely used CAD/CAM shipbuilding software in the world. Behind AUTOKON stands a cooperation between the Central Institute of Industrial Research (SI, formerly CIIR), The Aker Yard, Group (AG) and Shipping Research Services. The introduction of new Interactive AUTOKON modules has established AUTOKON as a tool for the designer as well as a tool to be used for production preparation. It is no longer only a shipbuilding system. Interactive AUTOKON has been designed to efficiently handle the complex plate and profile structures found in offshore products. The paper describes the Interactive AUTOKON System which presently replaces a major portion of the batch AUTOKON modules. Main emphasis is placed on the philosophy behind the system development and examples of use.

1. THE INTERACTIVE AUTOKON DEVELOPMENT

It was decided in 1976 that a completely new system was to be developed. The reasons were many. The decreasing hardware cost and interactive Computer Graphics made new and better solutions possible. An other reason had to do with the yard themselves.

1.1. THE SHIP YARD'S SITUATION

With the oil crises i 1973 came an entirely new situation for most shipyards. The demand for large oil tankers, which for many had been the main activity, was drastically reduced.

Yards used to producing series of almost identical ships (sister ships) now had to design and build ships of all different types (if they were lucky enough to get contracts at all). Not only did they have to build mainly prototype ships but the lead time, the time from contract to finished product, had to be drastically reduced due to fierce competition. In order to reduce lead time design decision had to be taken at earlier stages than before with the subsequent possibility for large design changes at later stages.

Increasing offshore construction activity provided yards with more work but also introduced new types of products with different and more stringent requirements to quality and to the amount and type of documentation needed. All welds of any structural importance had f.inst. to be given unique identifications together with information such as who did the welding, what welding certifiates did he/she have, the result of weld controls (such as x-rays) etc. This information had to be available not only for the yard itself but also for the contractor and the classification societies. Typical for offshore structures was also the large amount of changes or revisions made throughout the design process.

Several yards now also build a range of industrial products based on plates and stiffeners as a supplement to their ship and offshore activity. Thus ship yards had to design and produce a more diversified product spectrum. Their ability to handle design changes became a critical issue.

1.2. REALISATION OF THE NEW CAD/CAM SYSTEM

The development project to replace AUTOKON is called "Interactive Steel-design" (IS). The CAD/CAM system it will result in, is referred to as INTERACTIVE AUTOKON.

1.2.1. Requirements

A CAD/CAM system does not function independent of other activities in the company. On the contrary, it requires information from, and provides information to, many activities. Examples include planning, material ordering, etc.

The concept of the CAD/CAM system as an information system (and not a technical calculation program) is important. Within Administrative Data Processing the notion of Information systems is an old one. The builders of CAD/CAM systems spend much attention on getting data into the systems. However, very few systems provide the user with flexible tools for extracting the information he needs in the form he needs it.

It is our opinion that any large CAD/CAM system must be realized as several subsystems that can communicate. Furthermore a major requirement that the developed subsystems could be utilized with the existing AUTOKON modules thus allowing a gradual replacement of AUTOKON. Other requirements were:

* All subsystems should use the same user interface (e.g. the operation of each subsystem should look similar to the user).

* Each subsystem should be available as stand alone independent of the others (assuming some system provided the type of input informatio it needed).

* The subsystems should work on subsets of the same product description or product model.

* Each subsystem' should utilize the same EDP tools for administring the product description. This is desirable for the development and maintainance.

1.2.2. Overview of the Interactive AUTOKON system

Figure 1 shows the major functions in the Interactive AUTOKON system. The functions are performed by one or more subsystems.

a) **3-D SURFACE DEFINITION**
Although the usual hullfaring is performed in BOF Interactive Autokon provides a module AUTOFAIR for interactive surface definition as well. This subsustem has the ability to define surfaces based on 2-D curves faired by the KURGLA Algorithm, as well as 3-D space curves based on a definition by two projections. The surfaces may be used in subsequent modules where intersection curves with arbitrary planes may be made. AUTOFAIR let you define a preliminary hull that is accurate enough to start the definition of the innerstructure (using the module AUTODEF) while the final fairing takes place thus reducing lead time significantly.

b) **DEFINITION OF PLANAR PARTS AND PROFILES**

This is performed by the functions in the subsystems AUTODEF, PARTGEN and AUTOPART. The subsystems may be run as stand alone systems. A user of all three will however most likely get them "packaged" as one system (often referred to as AUTOMODL by the project development team).

What this "package" offer is one tool be used from design throughout production preparation. It allows the definition of planar surfaces and curves of different types. Parts and profiles may be defined for design and/or production purposes in a very flexible manner. Cutouts caused by profiles are generated automatically. In the same way the thickness countours on a part caused by plate thickness on adjacent parts are generated by the system. Furthermore the sequence of definition is arbitrary. The profiles generating cutouts in a part or the adjacent parts with thickness may be defined before or after the definition of the part they influence.

Profiles are separate entities in the product model. In the same way as for parts (refer PARTGEN) profiles are stored with a topological description, thus allowing certain changes to take place automatically.

Endcuts in both ends as well as clearances are stored as well. Weight and center of graviety may be calculated and reports produced by the report generator.

Figures 2 - 9 show examples of information generated by these subsystems.

Figures 2 - 6 are from a supply wessel designed and produced by Ullstein Hatlø, Norway.

Figures 7 - 8 show part of the Gullfaks A frame structure soon to be produced at Stord Yard, Norway.

SYSTEM OVERVIEW

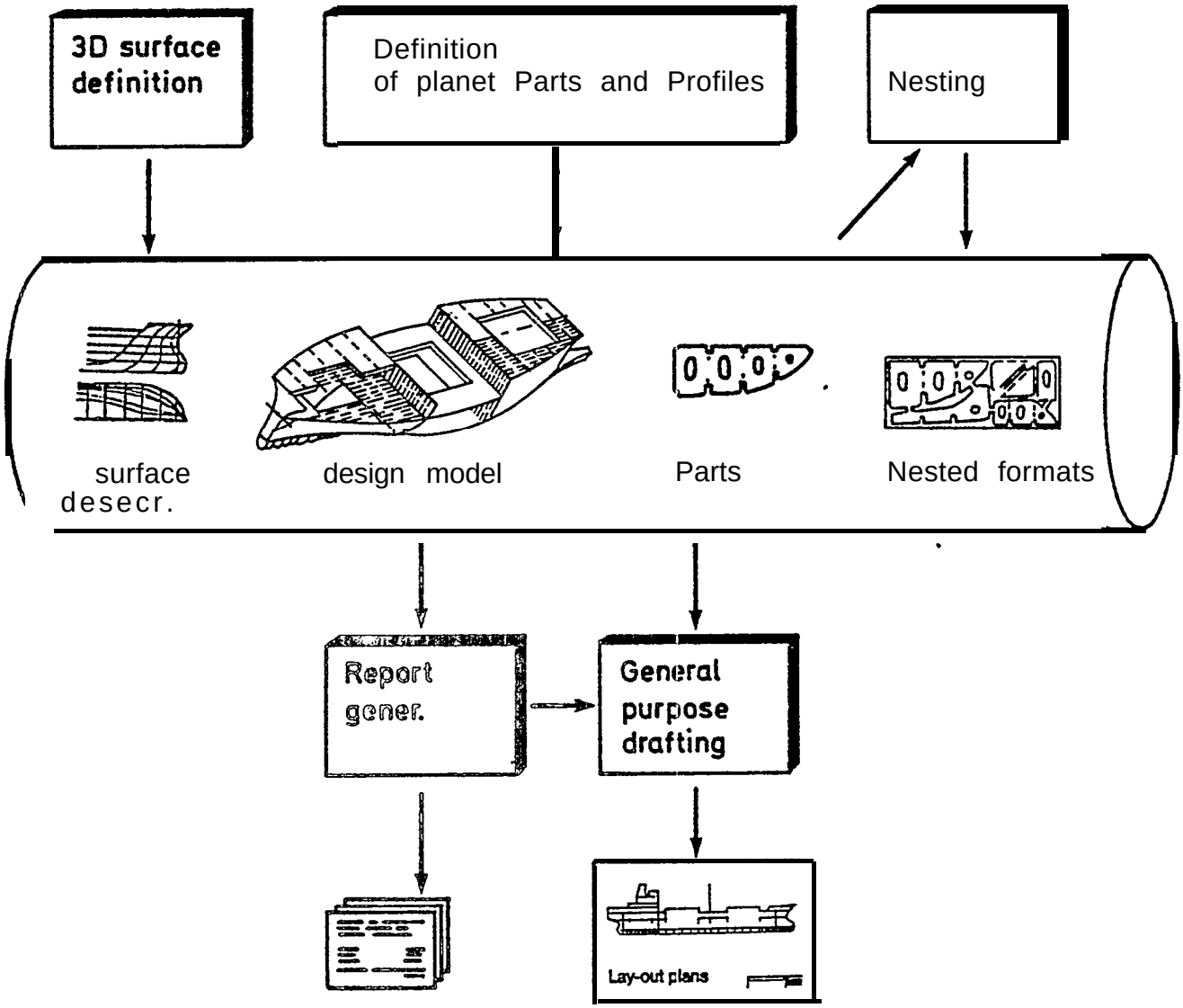

Fig. 1. System oveviews

```
$AREA-BOX -5000,-10000,
65000,10000
$AXON 0,-1,0
$SET-GEOM T
$SET-DRAW B
$SET-S-M B
$BEG-SC-S SH-0,SP,N
$GIVE-SURF-BOX -5000,80
000,-10000,10000,-1000,
30000
$POS-SU-PO 0,0,0,1000,0
,0,1000,1000,0
$BEG-DEF-CU 200,UW,11,S
$POS-CU-PO 0
$BEG-SPLINE
$GIV-SPL-P -4200,6900,1
1
$GIV-SPL-P -4200,5800,3
1
$GIV-SPL-P -4200,4700,1
1
$GIV-SPL-P -3200,3300,1
1
$GIV-SPL-P  2550,2000,3
1
$GIV-SPL-P 11800,   0,5
1
$GIV-SPL-P 50000,   0,3
1
$GIV-SPL-P 54400,   0,1
1
$GIV-SPL-P 55400, 250,1
1
$GIV-SPL-P 56400,1300,1
1
$GIV-SPL-P 56400,3000,3
1
$GIV-SPL-P 56400,4700,1
1
$GIV-SPL-P 57200,6900,1
1
$GIV-SPL-P 58300,8700,1
1
$GIV-SPL-P 59500,10500,
11
$END-SPLINE
$END-DEF-CU
$BEG-DEF-CU 200-1,UW,51
,B
$POS-CU-PO -200
$INCLUDE-CONTO DEF-200
$INT 11800,0
$STR-P-D 11800,0,90
$LEN 0
$TERM
$END-DEF-CU
$BEG-DEF-CU 200-1-1,UW,
51,B
$POS-CU-PO -200
$GEN-PAR DEF-200-1,-2
$END-DEF-CU
$DEL-CU DEF-200-1,B,N
```

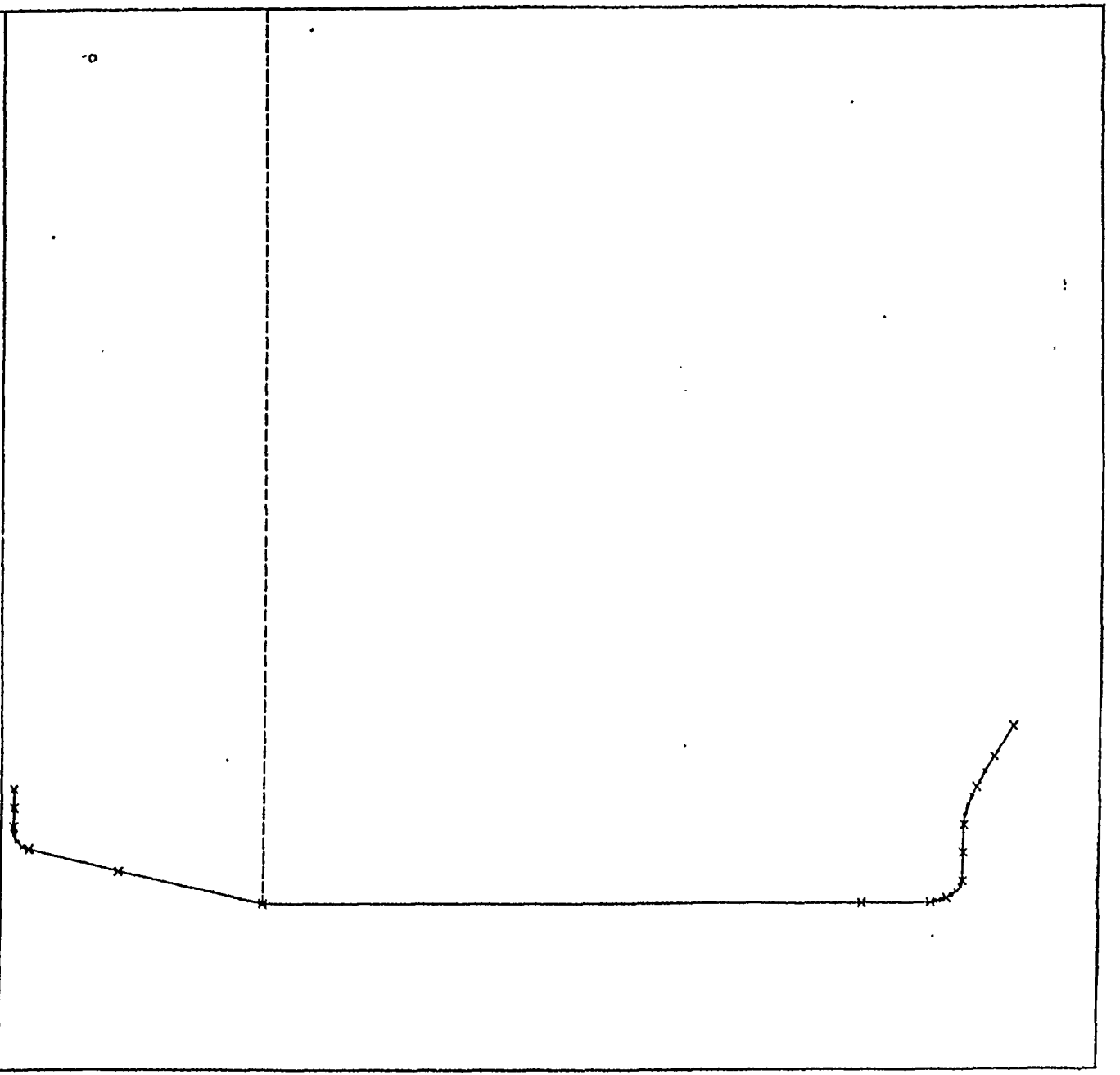

Fig. 2. Bow, keel, and stern profile curve

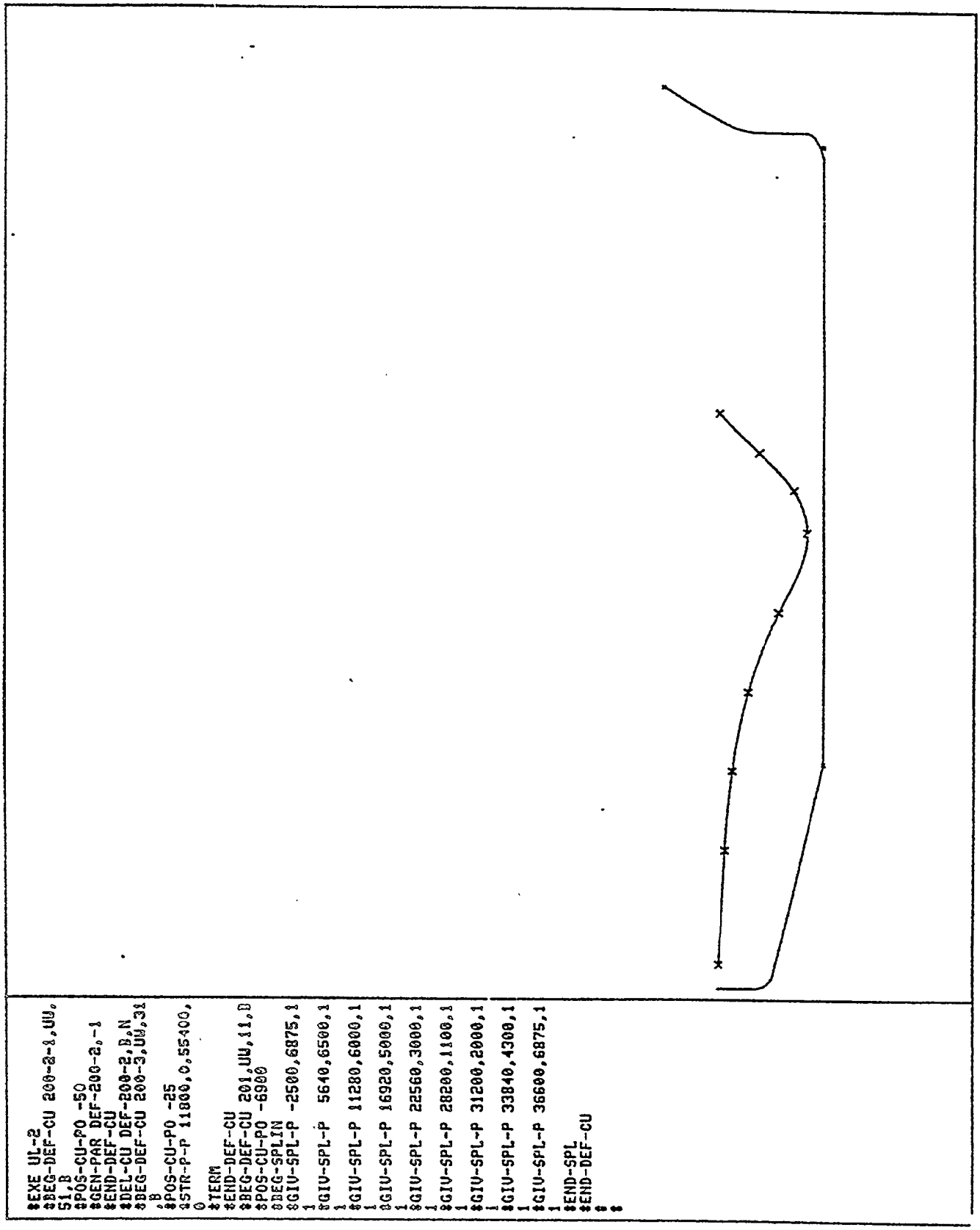

Fig. 3. Profile curve and midship tangensy curve

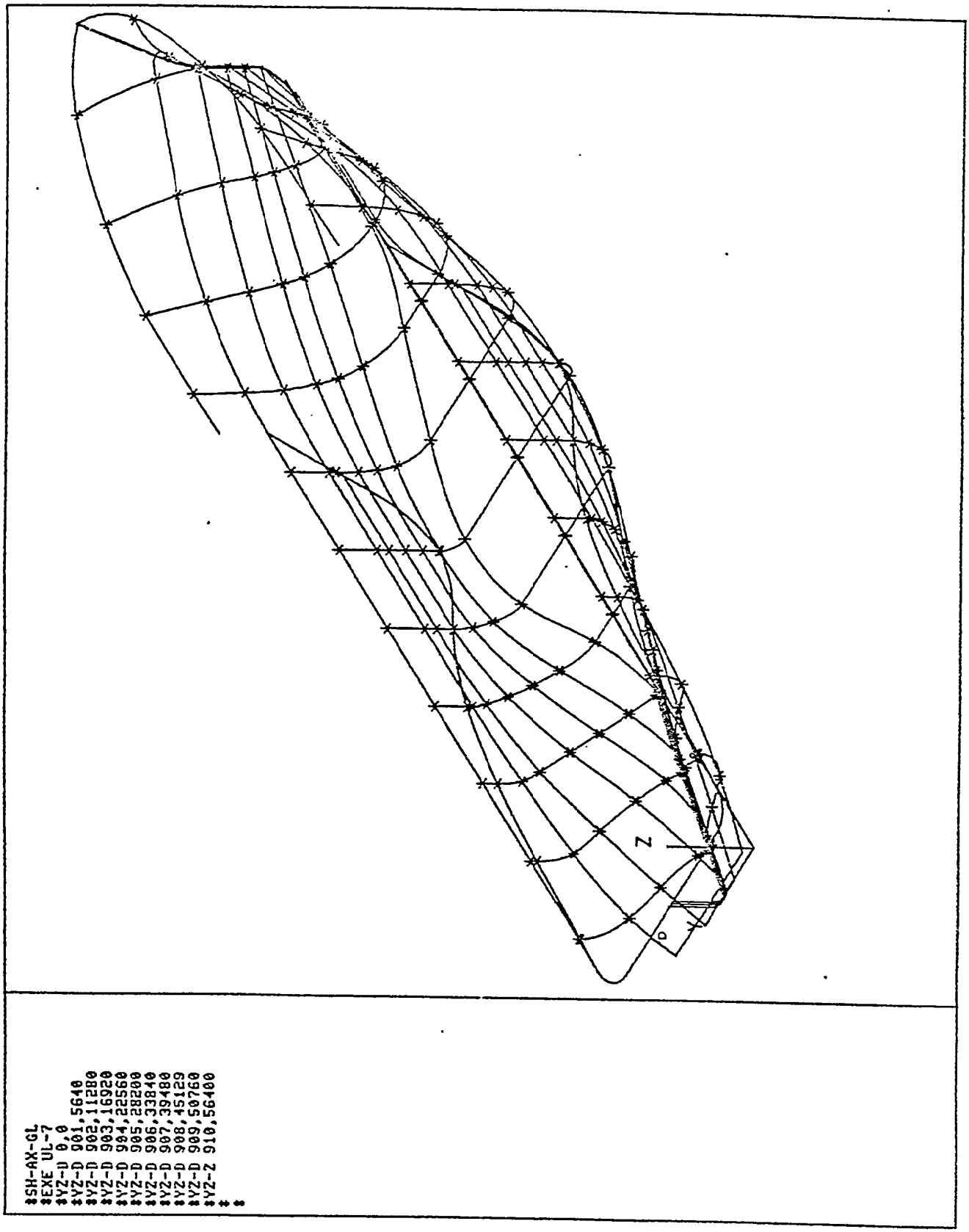

Fig. 4. Generation of transverse curves using macro YZ-D

AUTODRAW is a general purpose drafting system. It is used to produce drawings of the result from the product model. It can extract any view and detail level of the product. It contains functions for:

* drawing layout
* drawing completion (text, dimentioning)
* geometry definition
* drawing production
* hidden lines removal

Figure 9 shows an assembly and welding sequence study performed by AUTODRAW. The individual parts are coded with Autopart.

AUTOREP is a a report generator providing function for the user to:

* extract data from the database
* manipulate the extracted data (ex. adding, sorting, etc.)
* present the results

The output of the reportgenerator may be input to AUTODRAW where it can be merged with graphics to produce reports like the one shown in fig. 10.

Figure 11 shows an exampel of a piping support drawing. This and similar drawings are produced "automatically" by a pipe support macro system developed by users at Stord Yard, Norway. The macro system is built on top of the commands available in AUTODRAW and AUTOREP.

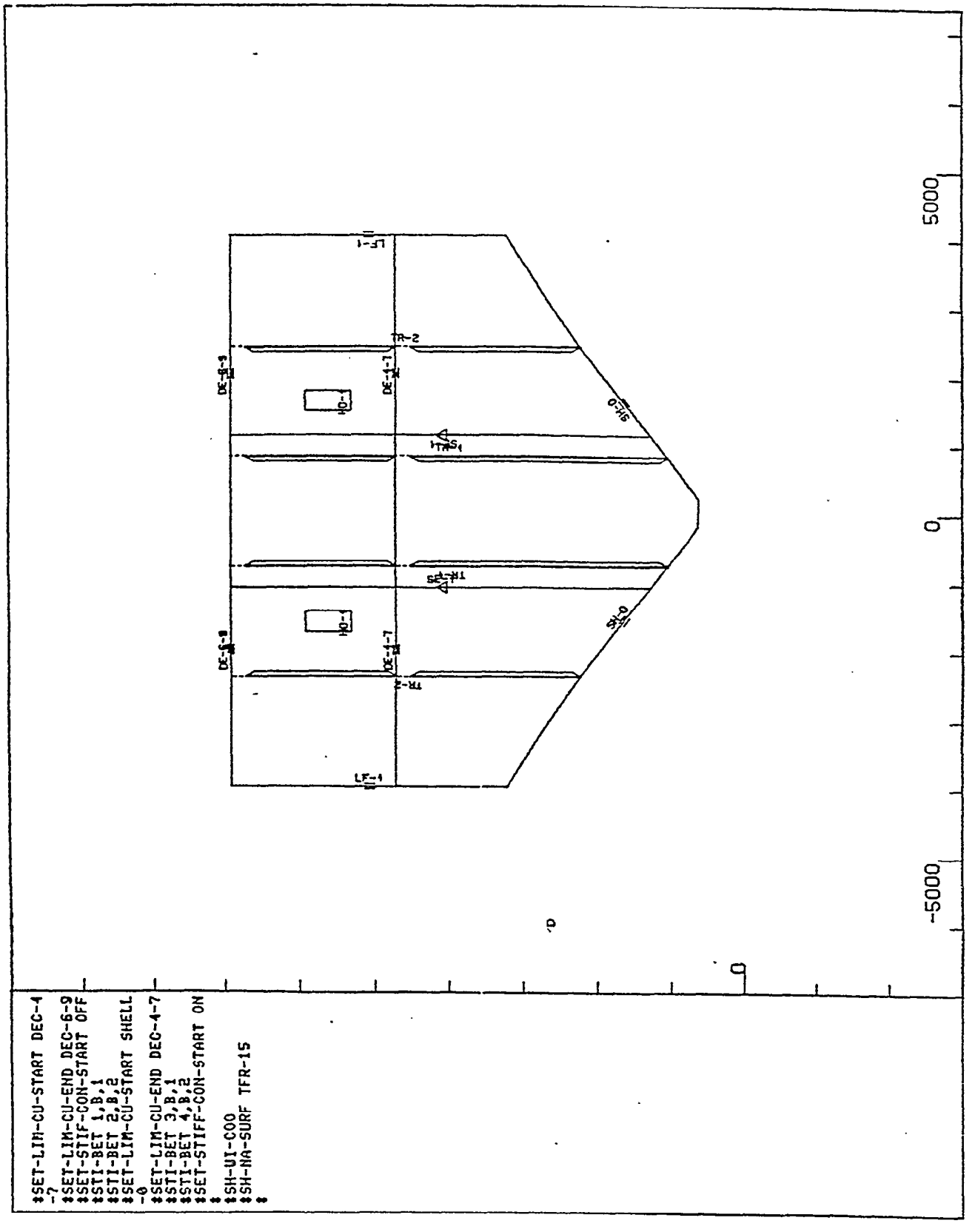

Fig. 5. Definition of profiles

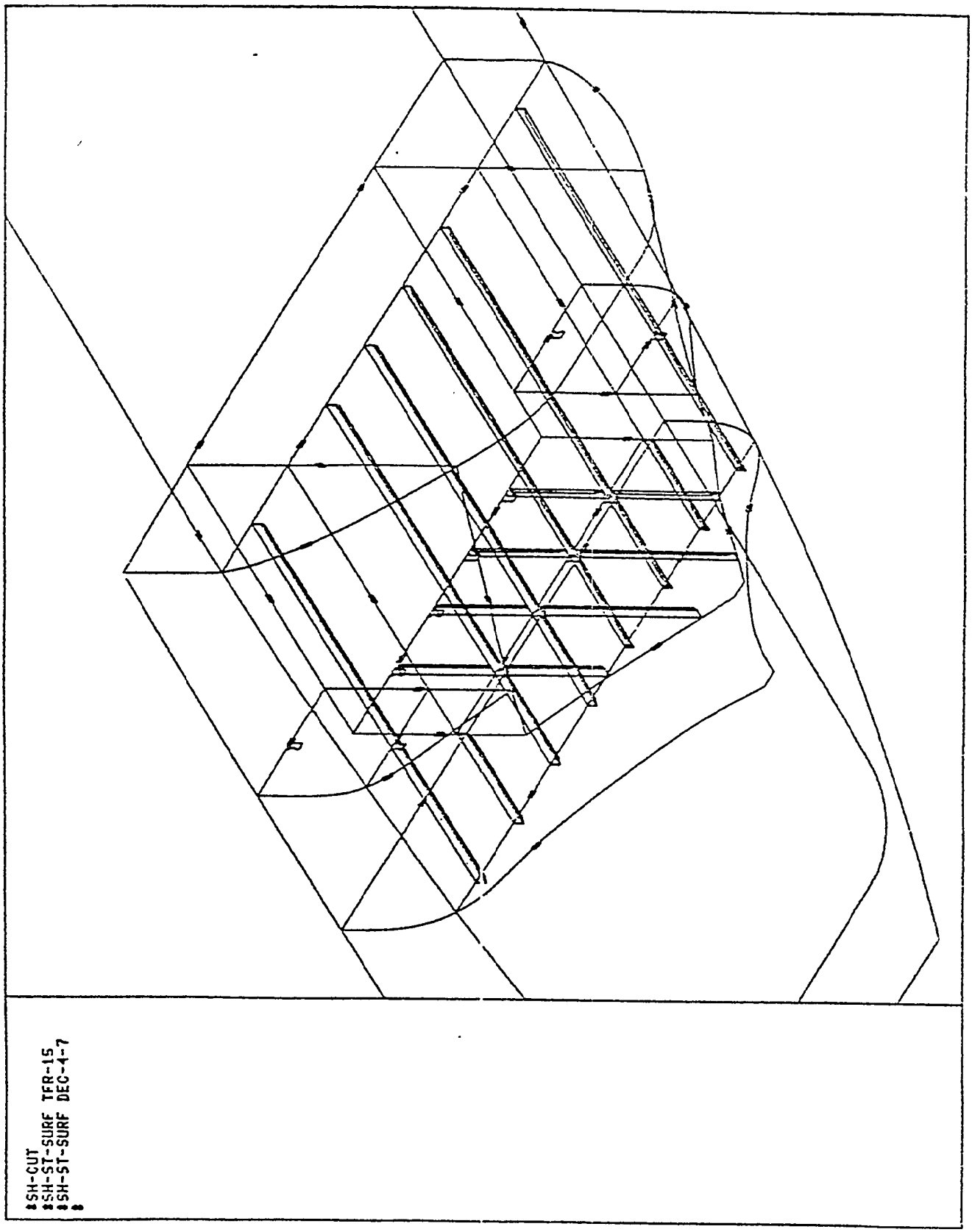

Fig. 6. Scene showing part of supply ship

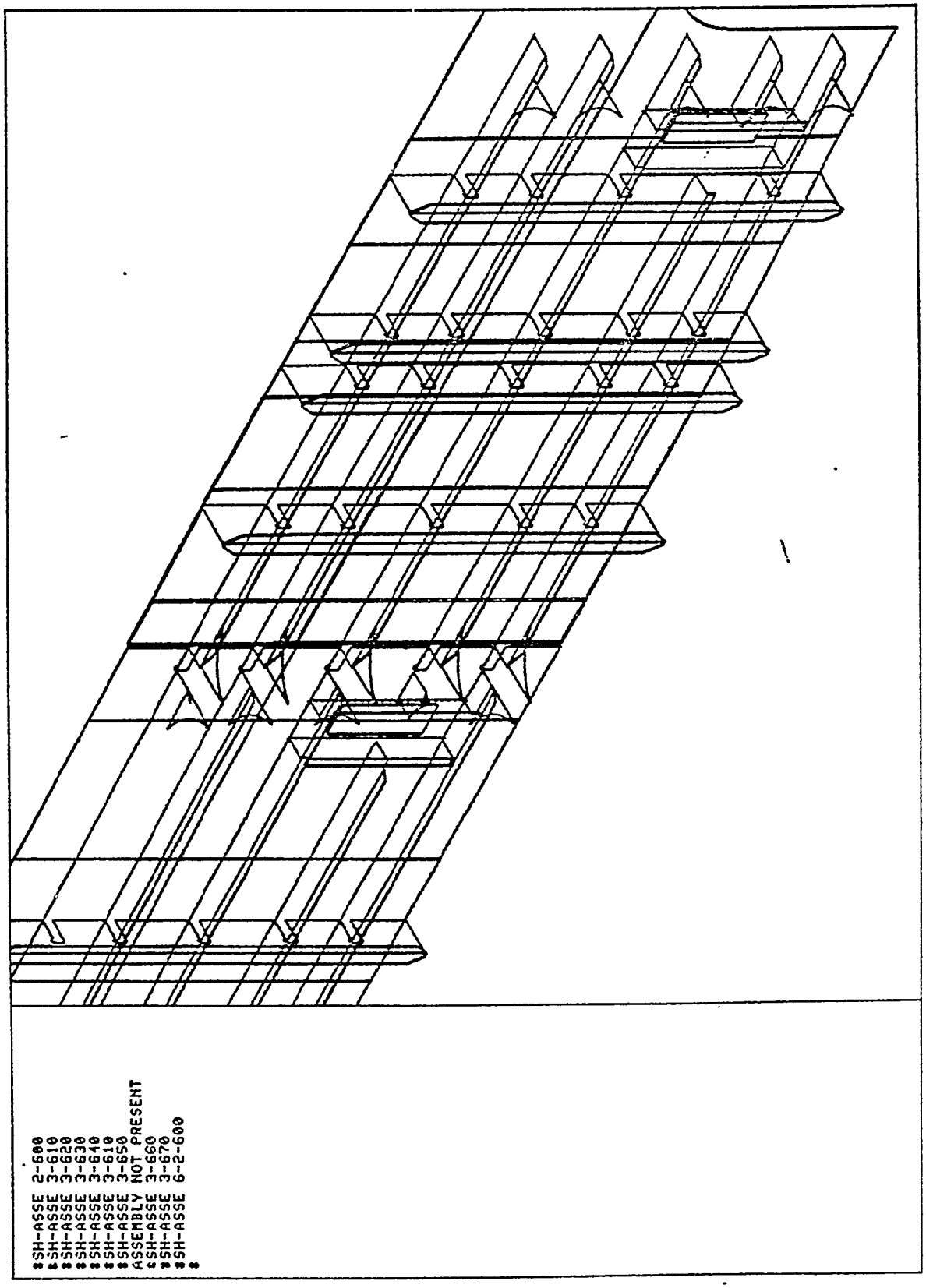

Fig. 7. Details from the Gullfaks A deck

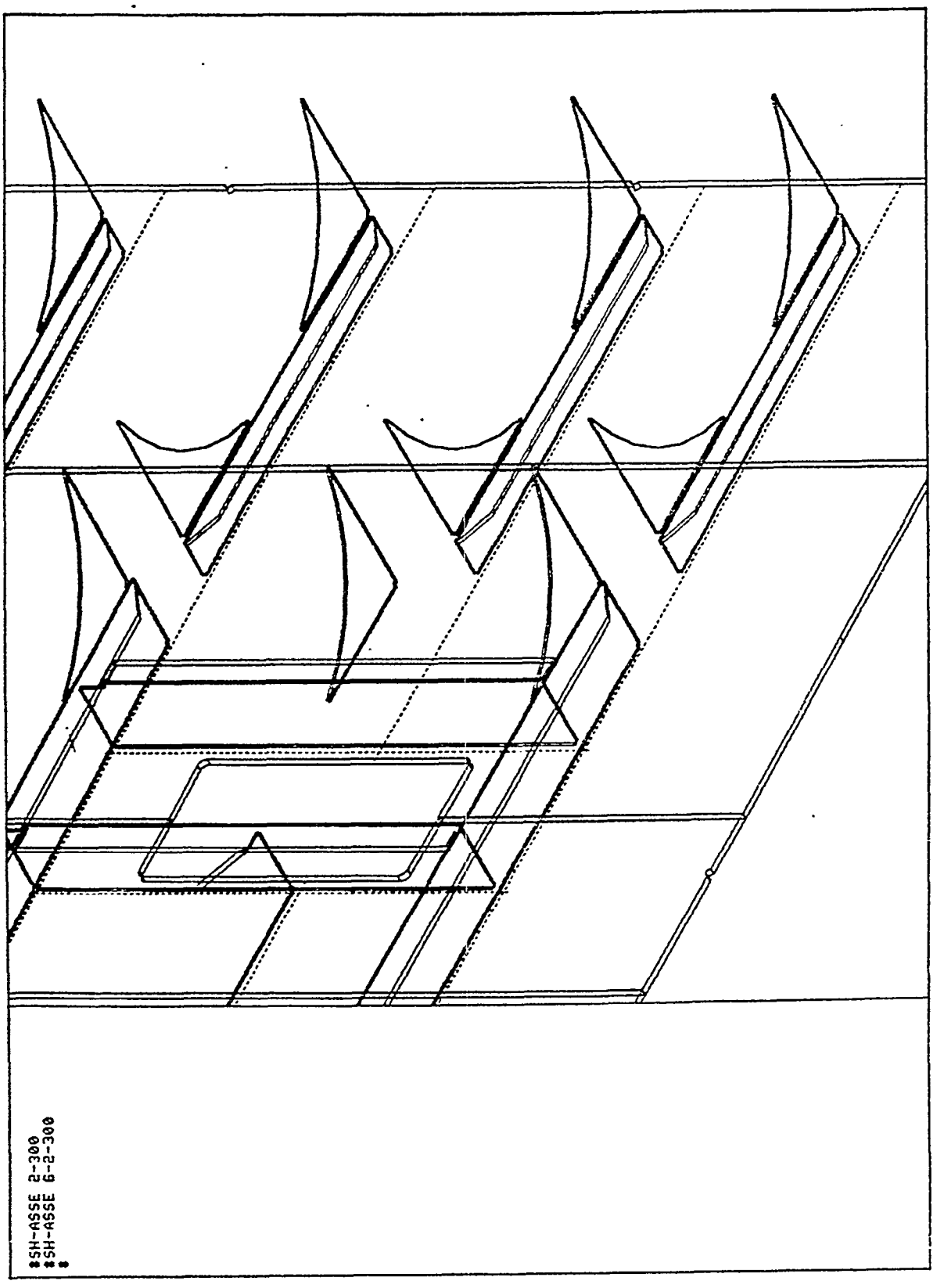

Fig. 8. Details form the Gullfaks A deck

SECTION 013

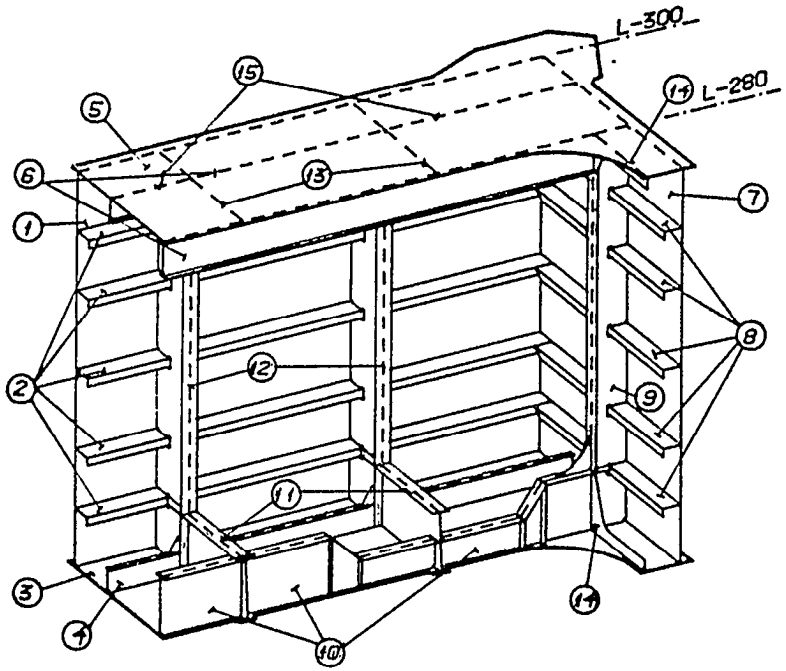

NOTE:
MINOR STIFFENERS AND BRACKETS ARE NOT SHOWN.

PROCEDURE		
PROJECT TITLE.	NO.	DEPT. MUT
	DATE 29.12.82	SIGN. MB
SUBJECT. ASSEMLY AND WELDING SEQUENCE	REV. NO.	PAGE. OF.
	APPROVAL	

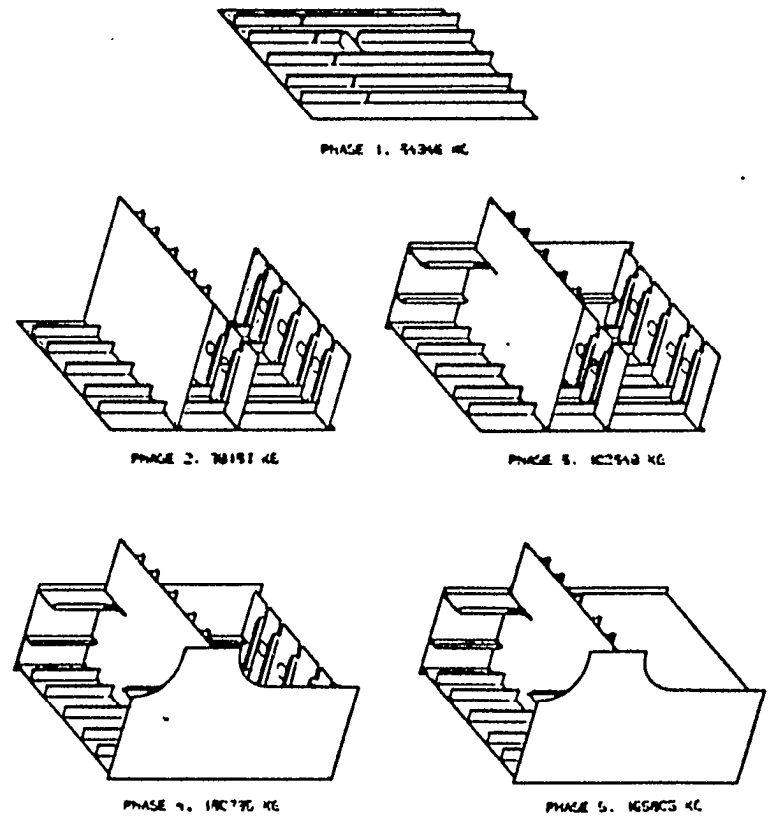

Fig. 7. Assembly and welding sequence

SIGNATUR	STORD VERFT A/S AKERGRUPPEN	MATERIAL BEHOV PROFILER	BYGGE NR.	SEKJONS NR.	GR.NR.
DATO 17.FEB.1983			1	1	
GODKJENT	Aiden REPORTSYSTEM	PROFIL-DIMENSJON 550 200 20 40 0 0	PROFIL-TYPE 3.		

PROFIL NR.	LENGDE	VEKT I KG	KVALITET	ANK.	SERT.	ANMERKNING
1	3596	507.9	GR-11			
2	3596	507.9	GR-11			
3	3596	507.9	GR-11			
4	3596	507.9	GR-11			
5	3596	507.9	GR-11			
6	3326	469.0	GR-11			
7	3596	516.7	GR-11			
8	3264	462.9	GR-11			
9	713	94.3	GR-11			
10	1208	164.0	GR-11			
11	264	31.3	GR-11			
12	264	31.3	GR-11			
13	264	31.3	GR-11			
14	3456	496.6	GR-11			
15	3461	497.4	GR-11			
16	3456	496.6	GR-11			
24	3048	429.0	GR-11			
25	3048	429.0	GR-11			
26	264	40.2	GR-11			
27	264	40.2	GR-11			
28	3264	471.9	GR-11			
29	264	31.3	GR-11			
30	3456	475.4	GR-11			
31	3456	475.4	GR-11			
32	344	47.1	GR-11			
33	2911	371.9	GR-11			

TOTAL-LENGDE 61655 TOTAL-VEKT 8651

Fig. 10. Weight report

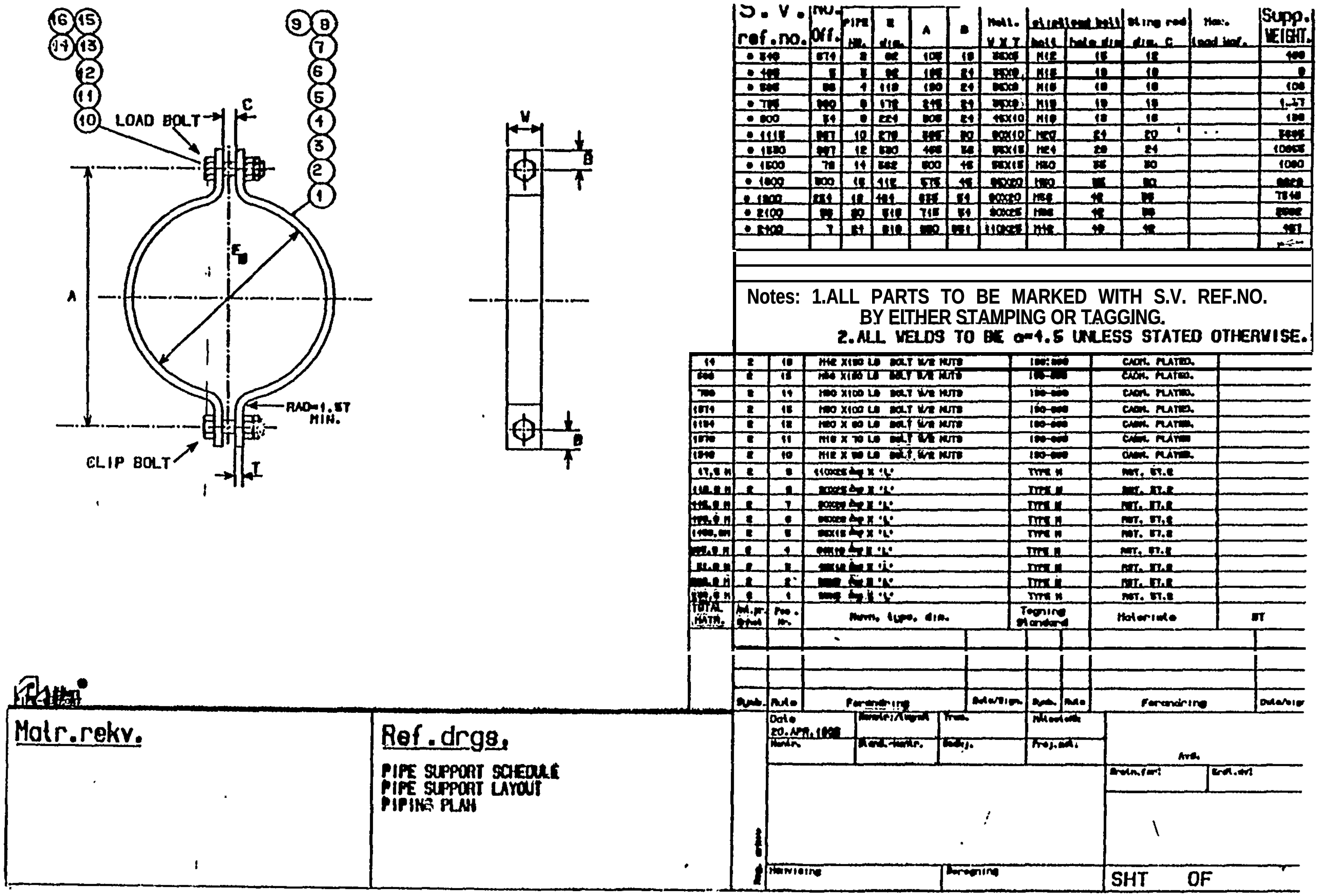

Notes: 1.ALL PARTS TO BE MARKED WITH S.V. REF.NO. BY EITHER STAMPING OR TAGGING.
2.ALL WELDS TO BE a=4.5 UNLESS STATED OTHERWISE.

Fig. 11. Pipe support

1.2.3. System architecture for the individual subsystem

A subsystem architecture has been developed. It consists of 3 different software levels.

1. The Command processor with the user workstation software. This module is described in some more detail in another section of this article.

2. Action routines that actually perform the application task. There is in general one action routine for each command.

3. Service routines or modules used by the action routines and user workstation functions to perform specific tasks.

The Command processor acts as the control center for the subsystem and can be compared to an operating system controlling the different tasks. The link between the Command processor and the action routines is via a branching subroutine while the link to the service routines are via subroutine calls.

What is most important is not the structure itself but the standardised high level approach it provides for developing new action routines (and thus applications).

Let us assume we want to extend the system with new commands. The following work must be done:

1. Action routines must be written to perform the desired functions. Several years of service module development have reduced this work. (For example all user communication has been standardised.)

2. The branching routines must be updated to include branching to the new action routines.

3. A new command description file that includes the description of the new command must be made. This involves only data read by the system.

No existing action routine is changed. If at a later stage errors occur in connection with the new commands, they may be excluded from the system by omitting them from the command description file. No reloading of the system is necessary.

1.2.4. The product model

The key to any successful CAD/CAM system is the internal description of the product or what is commonly referred to as the product model. The product model contains not only the physical description of the product, but also data and procedures relevant for the design and production of the final product and for information exchange with other activities outside the CAD/CAM system itself.

Even though the different subsystems may access only a certain part of the product information, it is important to a view the total requirements.

The product model has to be implemented in a "data base" and administered by some data management or structuring tool.

For a product as complex as a ship and an offshore structure, one of the main problems is to describe the product model. This is not a problem concerning implementation but rather a question of establishing the relevant logical description of product.

A simplified view of the IS product model is shown in fig. **12**. This gives a view of different entities and the relationships between them. This has to be performed before any physical implementation in a database. Methodologies are available both to help describing a product model and in the verification of correctness and later implementation.

The key to a change-oriented system is how the product is described in the computer. The product model has to have change-oriented features designed into it from the start. A popular solution for obtaining this changability is to sepåarate the topology of the product from the geometry.

I will try to illustrate these somewhat difficult words with some examples. In fig. **13** we have started off by defining the shape of a ship hull. The longitudinal frame or stiffener (2) is described not in absolute coordinate byt relative to the hull (1). In the same manner the braket (3) is described relative to the lingitudinal stiffener. If the shape of the hull is changed, the description of the stiffener and the bracket should still be valid. This ability is obtained through the way we describe each individual part.

Fig. **14** shows the relevant curves and their intersections which are used to describe the bracket and fig. **15** the implementation structure for the bracket itself. The bracket is described by the curves that delimite it. The actual description referres to the curves via the intersection points of the curves,

When the hull is changed all intersection curves with other surfaces have to be computed. Thus a new geometry for curve 1 is produced. If curve 2 is described relative to curve 1 its new geometry can be determined. Depending on design options it is now possible to:

* leave the bracket description unchanged. The bracket will now have a slightly different (larger/smaller) size than before.

* keep the shape of the bracket by moving curve 4 to a new position.

Two more practical examples based on hardcopies from a Tektronix screen are shown in fig. **16** and 17.

The sequence in fig. *16* shows two parts that are located next to each other (a). For some reason the seam that devides them is moved 10 mm. The user defines the new positions of the seam (b) and asks to have the parts redrawn (c). (This is a rather common change.)

Fig. 17 shows another common change. The type of a stiffener is change. a) and b) show the complete structure and the part before the change. c) shows the part redrawn after a stiffener has been given a new type.

To administer the product model the system TORNADO is used. TORNADO is a data base system developed at SI for use in CAD/CAM systems.

SIMPLIFIED PRODUCT MODEL (SYSDOC NOTATION)

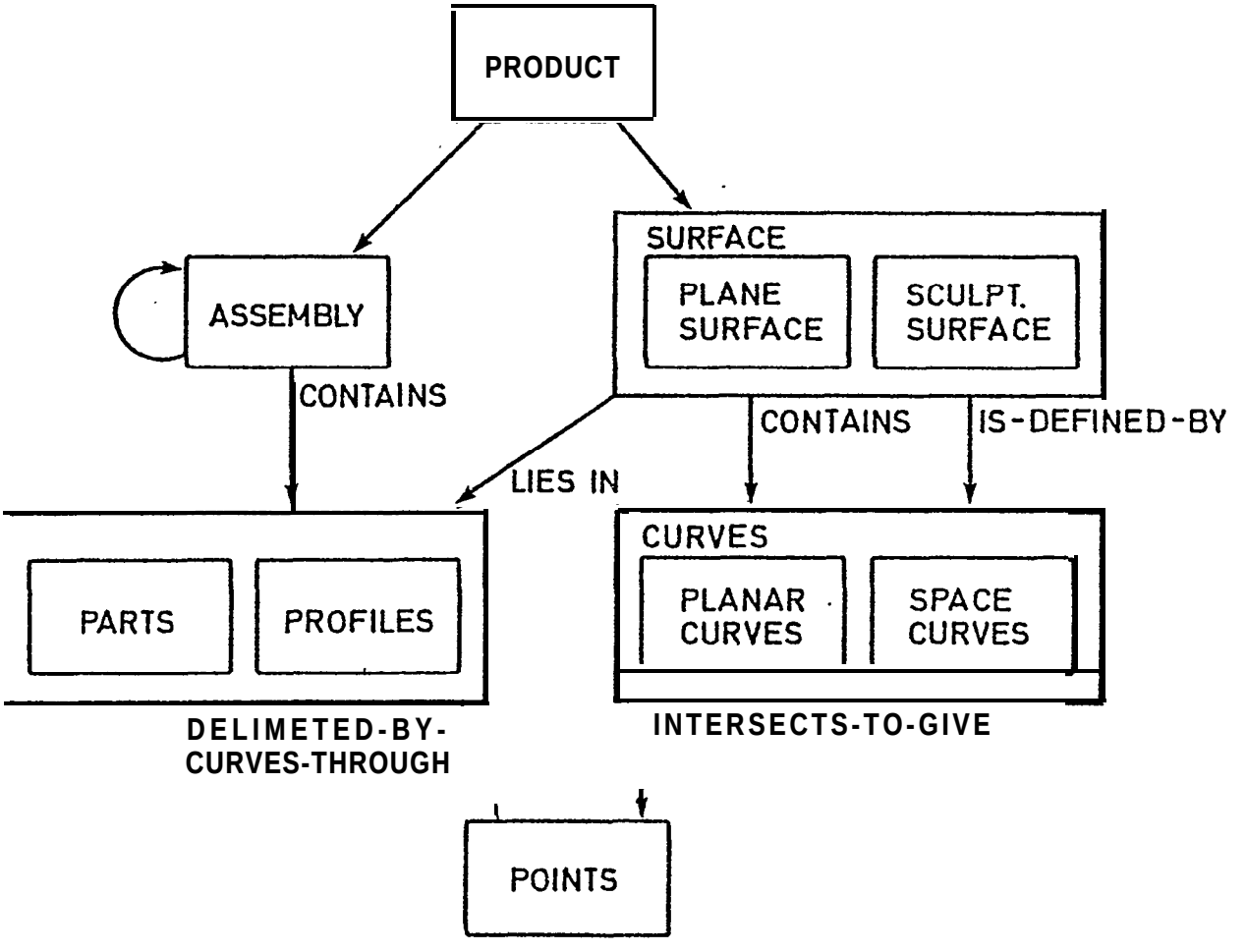

Fig. 12. The IS product model

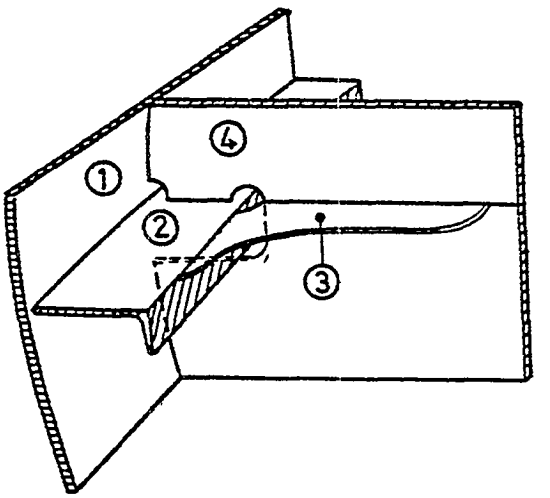

Fig. 13. Ship structure

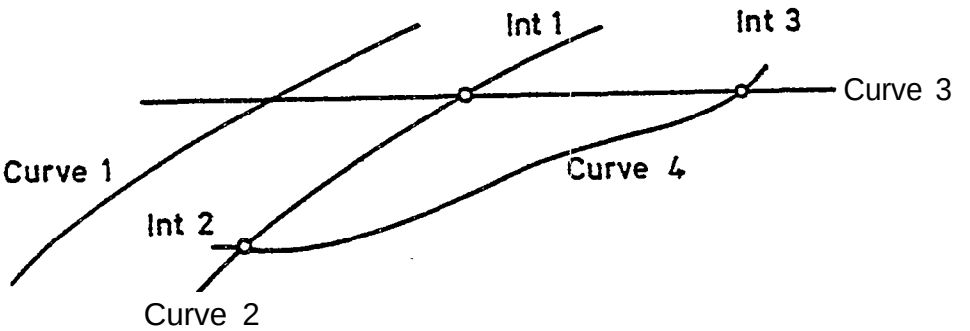

Curve 1 = intersectioncurve hull surface / profile surface
Curve 2 = parallel to curve 1

Fig. 14. Curves and intersection

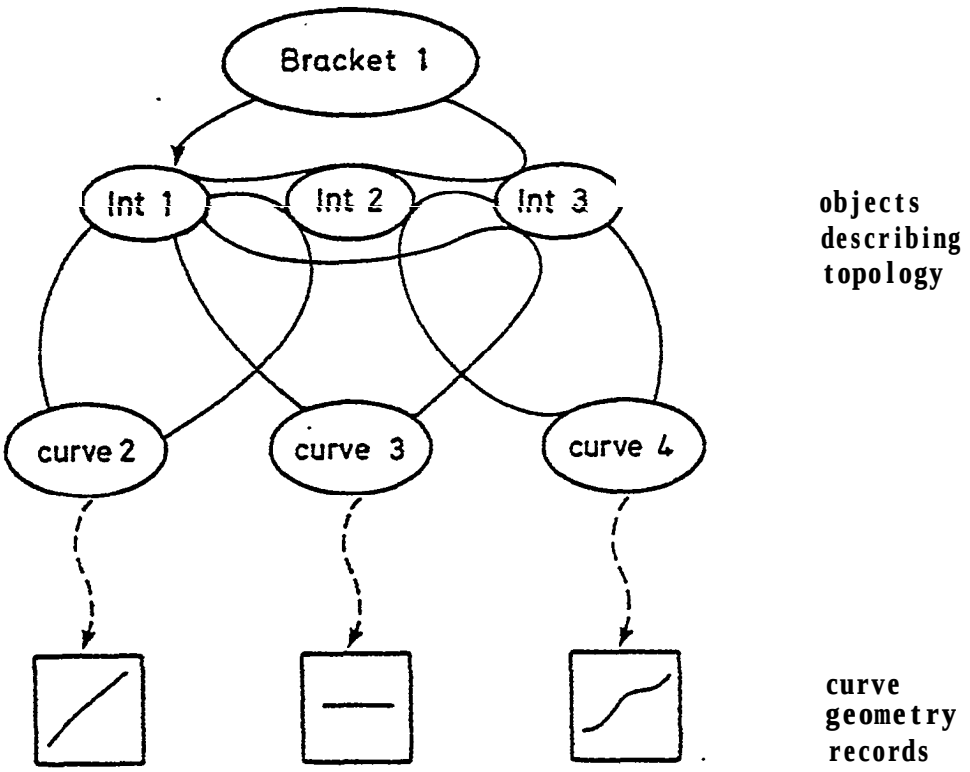

Fig. 15. Implementationsstructure of bracket

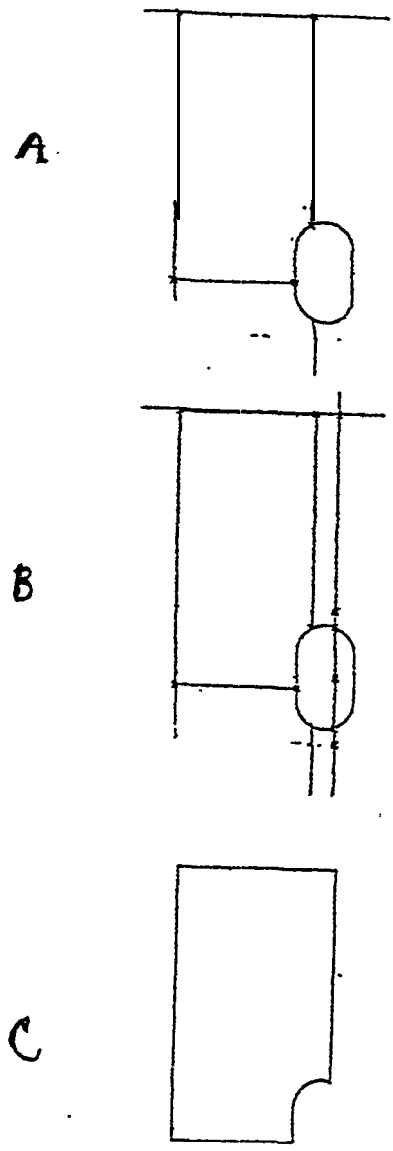

Fig. 16. Automatic regeneration of a part geometry after a change in one of the boundary curves

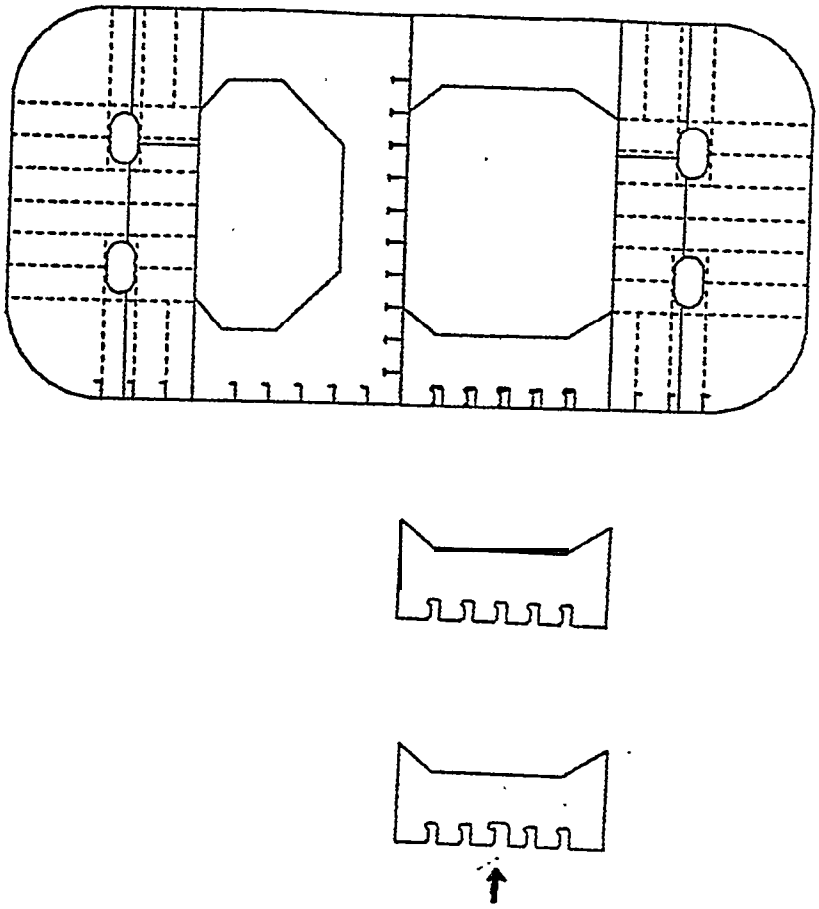

Fig. 17. Automatic change in a cutout cased by a profile when profile type is changed

1.2.5. The User Interface

The communication between the user and his CAD/CAM system has been given a lot of attention in the present years, and obviously here lies a key to a user-friendly and efficient system.

The communication between the user and the system relies on several factors:

* Can he relate to objects and tasks that are meaningful to him as a designer?

* Can he refer to them with names or terms he is familiar with?

* Has he access to the information he needs such as standards, partregisters, etc.?

* How does the actual communication take place? What type of hardware and software tools does he have to support this communication?

The first 3 aspects obviously has to do with how the system itself is designed, and is independant of what graphic equipment that is used. The last aspect is however to a certain extent equipment dependant.

Within the IS project we have developed software tools for supporting those functions we feel the user needs to have available, independant of applications, independant of graphic equipment. We have attempted to design our work station software without a particular set of hardware in mind, but with such an internal structure that when new hardware is to be adopted, only specific work station software modules have to be modified.

The IS user work station software can be divided into four different parts, see fig. 18.

1. A "stand alone" initation sub-system with commands for:

   - defining screen layouts
   - defining commands and command menues
   - defining user dialogues
     defining error messages

   In addition utility commands are included for initiating data bases, designing data base contents etc. (Some or all of these commands may be included as part of another

subsystem if desired).

2. A command prosessor which is included as the control center in each application or subsystem. The command processor includes functions for:

   - syntax analysis
   - device and viewpoint control
   - menue handling
   - help functions (working on the command definition)
   - logging commands
   - etc.

3. A set of applications independant system commands for utilizing the command processor functions:

   -HELP
   - POSITION-MENUE-ON-TABLET
   - CHOOSE-MENUE/PEN/CROSSHAIR/- -

4. A set of subroutines used in the individual commands for performing functions such as:

   - requesting and fetching user input
   - displaying messages (including error messages)

2.CONCLUSION

Interactive techniques have been used in shipdesign and production preparation for some years. What Interactive Autokon offers is the merging of interactive Computer Graphics techniques with the introduction of a product model that that contains enough structural information and data to bridge the gap between design and production.

BI-DIRECTIONAL INTERACTIVE GRAPHIC INTERFACE BETWEEN THE STRUCTURAL SYNTHESIS DESIGN PROGRAM AND THE HULL STRUCTURAL DATA-BASE PROGRAM

Robert Frasca
Advanced Marine Enterprises, Inc.
Arlington, VA

P. Glennie
Naval Sea Systems Command
Code 55Y
Arlington, VA

Eric Byler
Advanced Marine Enterprises, Inc.
Arlington, VA

Mr. Byler received his B.S. in Ocean Engineering from the Massachusetts Institute of Technology in 1980. Since then he has been employed by Advanced Marine Enterprises, Inc. of Arlington, VA as an engineer developing, integrating, and applying CAD/CAM Systems to the Naval ship design process. Mr. Byler is currently a member of the American Society of Naval Engineers.

ABSTRACT

An interactive, bi-directional interface program has been developed to integrate data exchange between the two Navy Computer Supported Design (CSD) programs HULSTRX and SSDP. HULSTRX develops a structural design geometry library and structural scantling file which can be used by other analysis programs in subsequent stages of a ship design. SSDP is a structural synthesis design program which can develop structural scantlings from given requirements or analyze given scantlings to determine whether they conform to current U.S. Navy design practices.

The Structural Interface Program, which is run on a Tektronix CRT, provides automatic exchange of complex geometric information between the programs by prompting the user with questions, statements, and displays of different portions of the ships geometry.

The work this paper discusses was sponsored by NAVSEA, Code 05R1, sponsored by NAVSEA 5O1C and directed by NAVSEA Code 55Y1 on Contract N00024-80-C-4456, task 5A624.

THE NAVY'S COMPUTER SUPPORTED DESIGN SYSTEM

The Navy's Computer Supported Design (CSD) system is a set of linked individual computer programs which assist the cognizant engineers in developing a ship design. To ensure that designers involved in one facet of the design process coordinate their efforts with other design efforts, a common data base is used. This data base is the repository of all information regarding the ship being designed and is accessed by the separate design programs. A breakdown of the CSD system showing the various subsystems and the central data base is shown in figures 1-3.

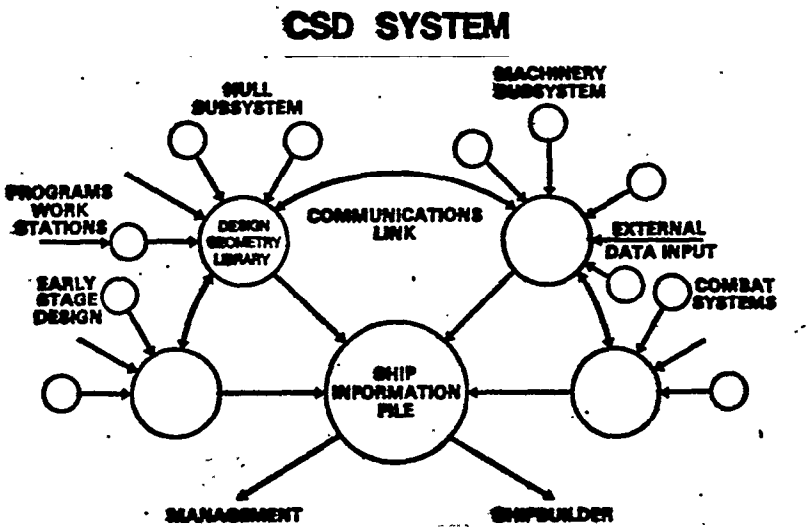

Figure 1. - Navy CSD System

Naval Sea Systems Command (NAVSEA) ship design engineers use the Computer Supported Design (CSD) System to perform early stage design (feasibility studies, preliminary, and contract design) of Naval ships. The computer-based system will eventually produce all the following design products:

Compartment boundary transfer

Initial 3-D model for shipbuilders

Diagrammatic drawings of systems

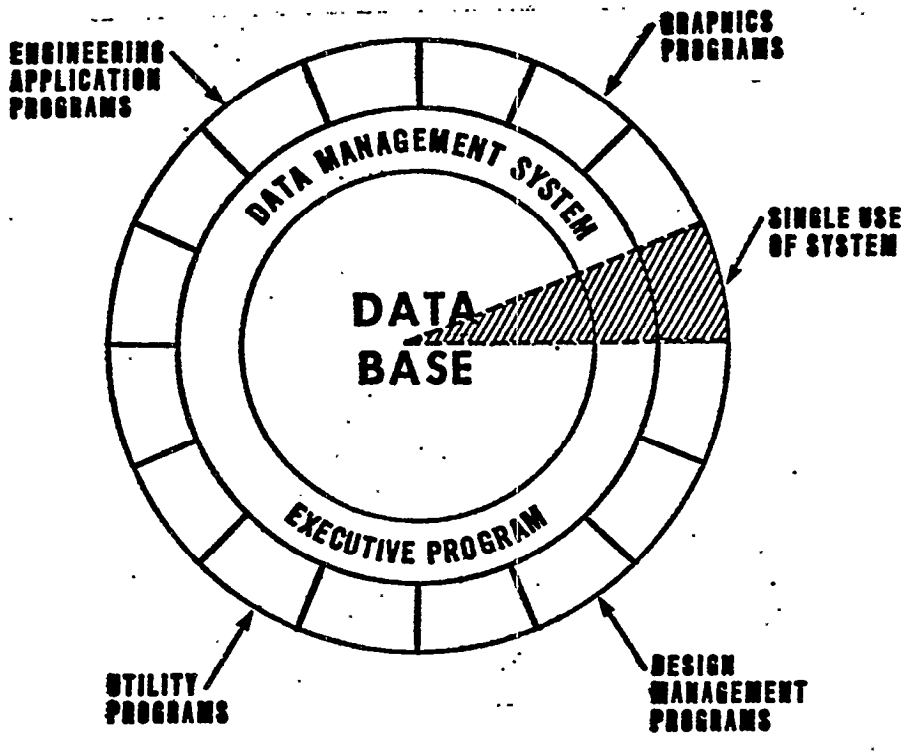

Figure 2. - Conceptual Relation Between Software and Data

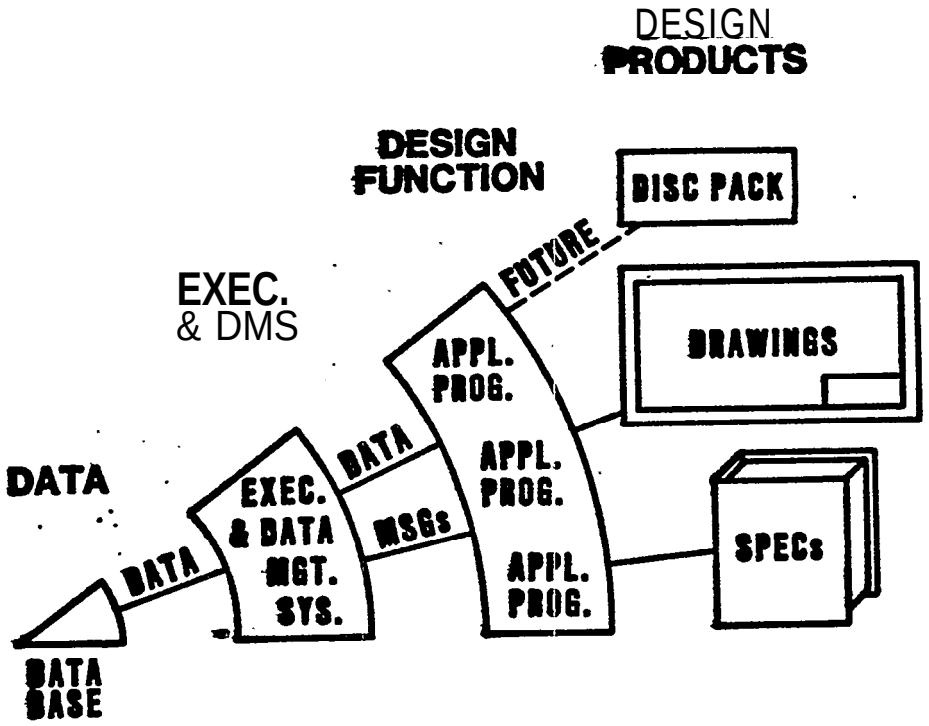

Figure 3. - Conceptual Data Base Interfaces

Equipment and compartment lists

General arrangement and scantling drawings

Equipment arrangement drawings

Report generation from data base

Integrated equipment lists and drawings

Full 3-D digital model for shipbuilders

Full integration of ship specifications and initial data base for shipbuilders and service life

benefits derived from developing the system include: increased engineering productivity; addition of new engineering analysis capabilities; improved design precision and optimization; reduced design cost and time; better management visibility of design progress; enhanced ability of quality engineers.

The CSD Project objective is to develop an integrated set of computer-based ship design tools for use by NAVSEA engineers and their supporting contractors in performing Naval ship design through contract design. The greatest potential for improving Naval ships occurs in the design stages supported by CSD because all major design decisions are made during these stages.

The hull subsystem of CSD, to which HULSTRX, SSDP, and SIP belong, is one of several major subsystems. Its central database is the Design Geometry Library (Table I). The programs which develop the design include HULGEN, HULDEF, SHCP, GENARR, HULSTRX, SSDP, and SDWE (figure 4). Their functions are explained in Table II.

The portions of the hull data base used to define the hull structure are the Structural Design Geometry Library (DGL3) and the Ship's Scantling File (SSF). The major structural programs are the Structural Synthesis Design

Table I. - Parts of the Design Geometry Library

STAT	General Characteristics
DGL1	DGL: lines dwg
DGL2	DGL: arrangements dwgs
DGL3	DGL: structure dwgs
SSF	Ships Scantling File
SGL	Ships Geometry Library [DGL1 + DGL2 + DGL3]
SHC	Ship Hull Characteristics

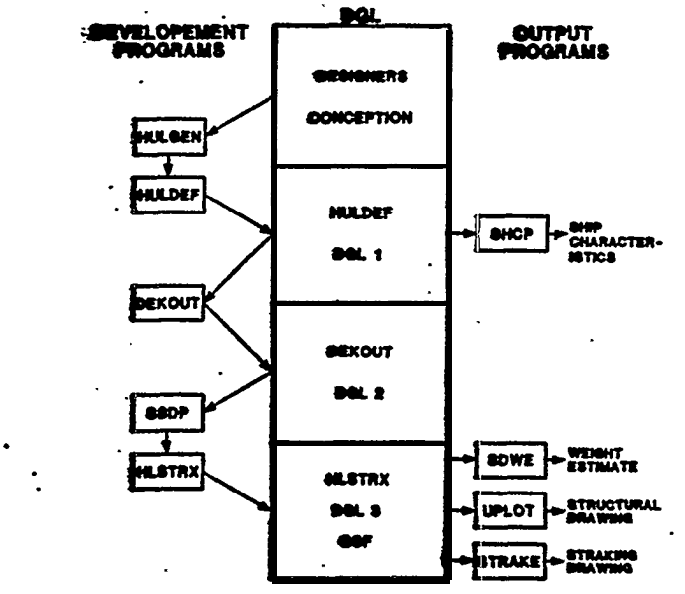

Figure 4. - Hull Subsystem of CSD

Table II. - Functions of Hull CSD Programs

HULGEN	An interactive graphics-type program which generates a twenty-one station body plan illustrating the actual desired hull form. The user supplies basic ship parameters: length, beam, draft, prismatic coefficient, maximum section coefficient, longitudinal center of buoyancy and longitudinal center of flotation. The output from HULGEN is a set of offsets in digital form.
HULDEF	Fairs and refines the offsets provided by HULGEN and yields precise drawings of the ship's lines and curves of form.
DEXOUT	Arranges the internal subdivisions of the hull by the development of locations for the major boundaries (decks, bulkheads, accesses, and superstructure) in accordance with requirements for damaged stability, deck area, and volume, for each function and functional relationship. All intersections of major boundaries are calculated, and included on the newly defined surfaces.
SSDP	Calculates scantlings and plate sizes of shell, deck, bulkhead, and inner bottom segments and tests for compliance with the strength criteria as defined by David Taylor Naval Research and Development Center (DTNSRDC). If any scantling is found to be deficient, it is modified via the program until scantlings meet the criteria of structural adequacy.
HULSTRX	Maps outlines and traces of the ship's structural components accurately onto various ship's surfaces. These are then used for detailed design in the next level of design.

Program (SSDP), the Hull Structural Lines Program (HULSTRX TRACES) and the Hull Structural Scantlings Program (HULSTRX SCANTLINGS). HULSTRX TRACES creates the structural traces of DGL3; HULSTRX SCANTLINGS creates SSF. SSDP creates a preliminary structural design for a ship within given constraints. Figure 5 provides a schematic of the structural portion of the CSD hull subsystem.

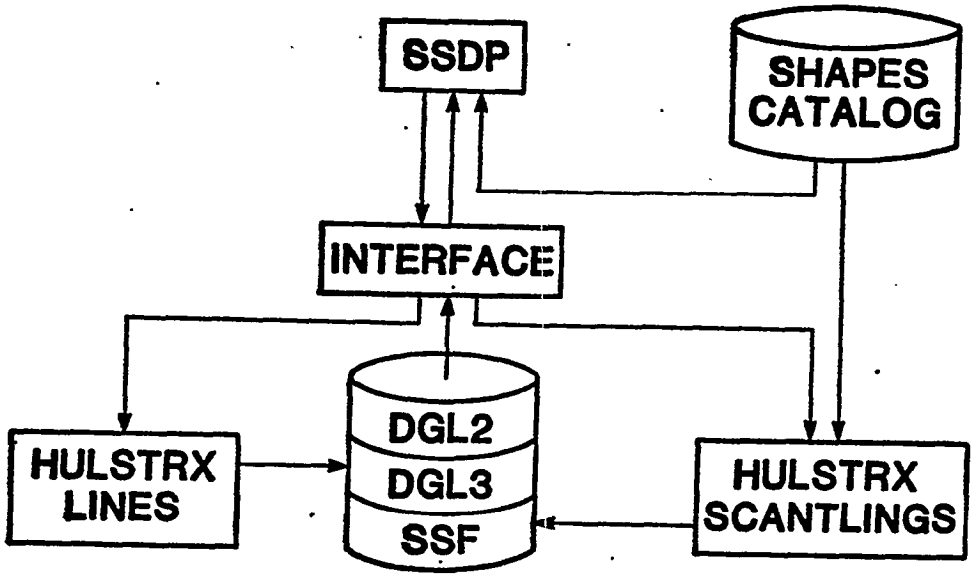

Figure 5. - Structural Portion of the CSD Hull Subsystem

OVERVIEW STRUCTURAL INTERFACE PROGRAM

PURPOSE

The purpose of SIP is to automate data transfer between HULSTRX & SSDP. The Structural Interface Program transports structural scantling information back and forth between the SSDP and the DGL3 and SSF. The purpose of this interface is to bypass manual manipulation of ship design data to decrease turnaround time and to increase accuracy. From the output of one program, the interface program creates an input file for the other including geometry, structural shapes, forces, and allowable stresses.

The HULSTRX program uses a digital definition of the hull to locate the structural members on the surfaces of a ship (figure 6). This information is stored in a Design Geometry Library (DGL) and a Structural Scantling File (SSF). The DGL is a digital representation of the ships hull, decks, bulkheads, and their associated stiffener traces (figure 7). The structural scantling file associates the stiffener traces with scantling information ' contained in a digital catalog of standard structural shapes (Table III).

The SSDP produces a structural design in accordance with Naval ship strength requirements based on least weight (figure 8). Also, if given a hull with scantlings, SSDP can validate that ship structure against Naval ship strength requirements.

Until now engineers had to develop the inputs to these two programs by hand. For HULSTRX, locations of stiffeners were initially estimated, and then modified and remodified until they matched the final design. For SSDP, a separate model of the ships geometry had to be created and stiffener locations had to be calculated individually. Accuracy had to be constantly checked and

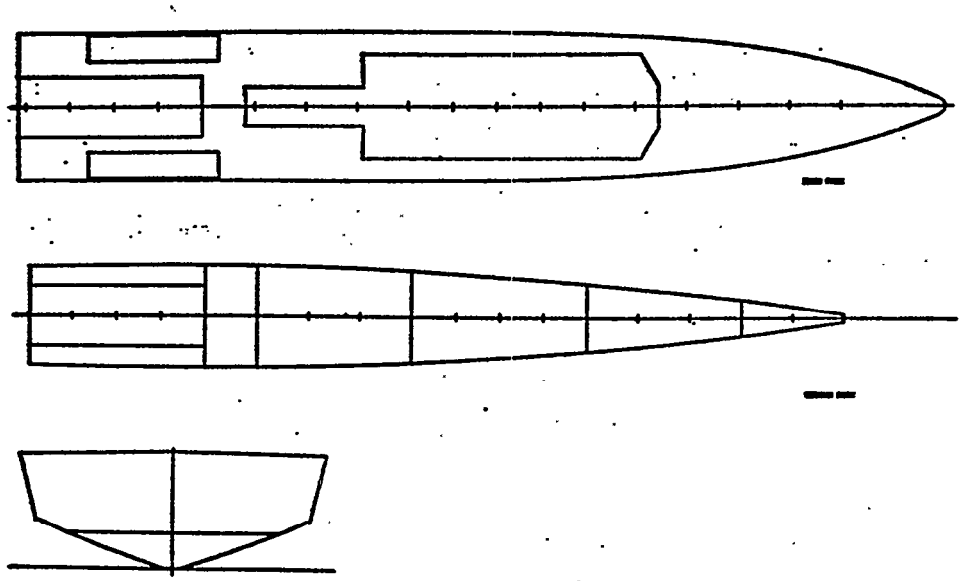

Figure 6. - Surfaces Defined on DGL1

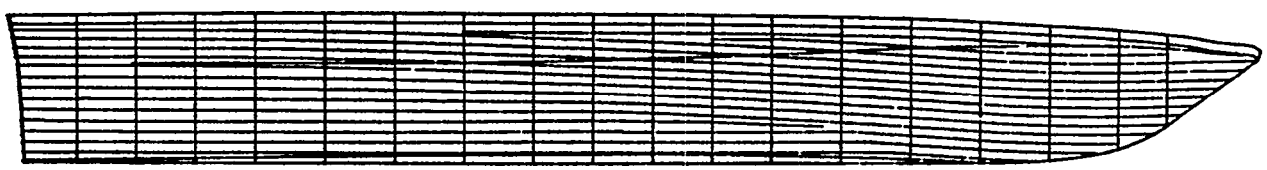

Figure 7. - Structural Traces Defined on the Shell Surface

every time the design changed the entire cycle started again. With the development of SIP, geometric and structural data is automatically converted back and forth between the two programs, by-passing possible mistakes and speeding-up the design cycle.

OPERATION

The output from SIP is an input file for the following program. The two

Table. III - Portion of Digital Structural Shapes Catalog

EO. NO. D6	CAT. NO. D6	DESCRIPTOR CTOE	XIITS	CODE	ASTS	TWS	TFS	
30	56	8.000 7	5,500 8 x 21.5 T 21.900	CT	6.160	0.305	0.530	6.8
30	57 121	7.960 10	7.380 X 8 X 33.0 I-T 55.300	CT	6.160	0.290	0.435	9.7
40	58 138	6.730 14	9.610 X 6 3/4 X 30.0 I-T 127.300	CT	6.220	0.270	0.385	13.8
70	59 106	7.040 8	6.200 X 7 X 22.5 T 37.800	CT	6.560	0.345	0.565	8.0
80	60 144	5.530 16	10.610 X 5 1/2 X 31.0 I-T 181.900	CT	6.680	0.275	0.440	15.8
00	61 96	8.030 7	5.530 X 8 X 24.0 T 24.900	CT	6.920	0.340	0.595	6.9
80	62 139	6.750 14	9.860 X 6 3/4 X 34.0 I-T 142.300	CT	6.920	0.285	0.455	13.9
00	63 130	6.560 12	9.030 X 6 1/2 X 35.0 I-T 111.400	CT	7.010	0.300	0.520	12.5
20	64 122	7.990 10	7.620 X 8 X 39.0 I-T 64.700	CT	7.190	0.315	0.530	9.9
	65 108	8	X 7 1/8 X 25.0 T	CT	7.300	0.380	0.630	8.1

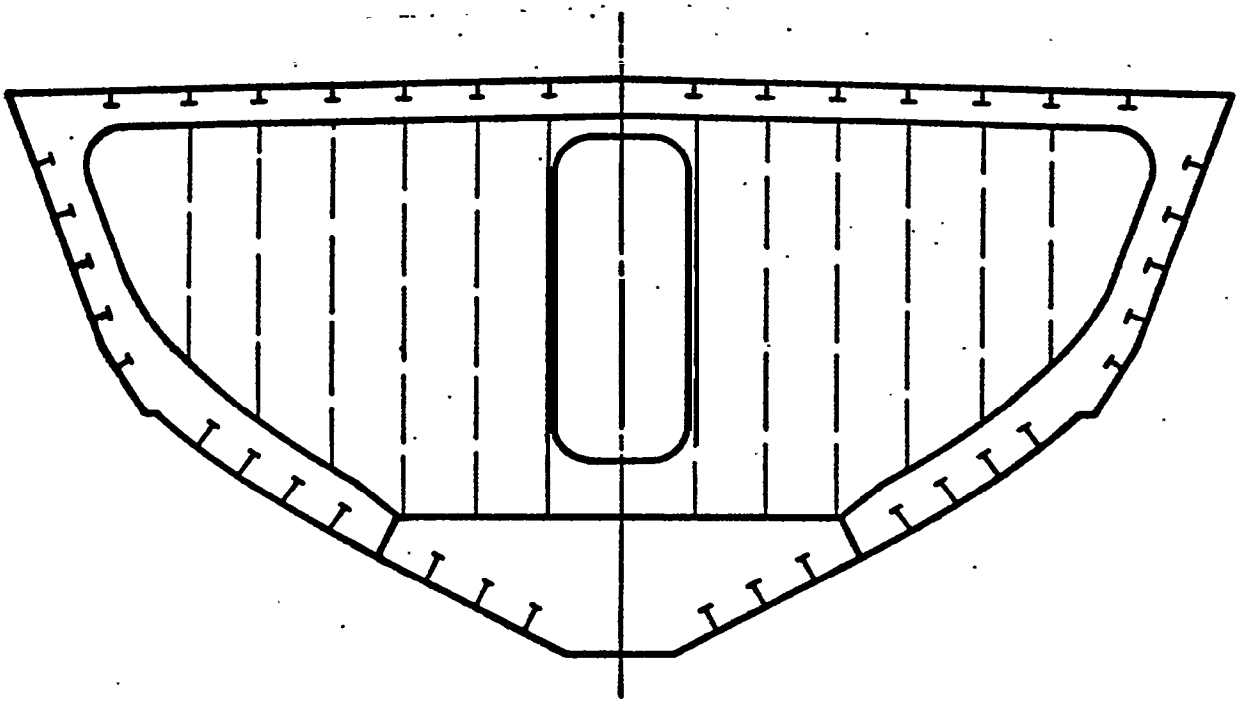

Figure 8. - SSDP Least Weight Cross Section Design

original programs are not modified in any way. This prevents obsolescence of previous designs.

The interface currently runs on a Tektronix CRT. The screen is divided into two portions. The left quarter of the screen is used for prompts. Prompts range from instructions explaining the operation of the interface, to

requests for file names, to requests for design parameters. The rightmost three-quarters of the screen is reserved for graphic information. This includes drawings of surfaces, drawings of sections, labeled points, and screen selects.

In assembling the required data for the next program, the designer can choose to use data from previous runs from either the same or different ships, default geometric information, or internal default values. The values selected are checked against maximum and minimum allowable values.

SSDP analyzes from one to ten cross-sections of a ship. To do this the designer must develop a model of the geometry at different sections along the ship. For each cross section of the ship, the program builds a geometric model by examining each surface of the ship (decks, bulkheads, and shell) for its existence at that particular section and then by recording the information (location and shapes) contained in a transverse cut of the surface.

SIP steps through each surface of the HULSTRX DGL. Each time a surface is found which should be represented on the particular cross-section, that surface is drawn on the screen including control lines, stiffener traces, and the proposed transverse cut (figure 9). At this point the user may add information concerning ineffective areas and transverse supports. The program prompts the user for openings which form 4:l shadows of ineffective material and for points which are supported by columns or other structure.

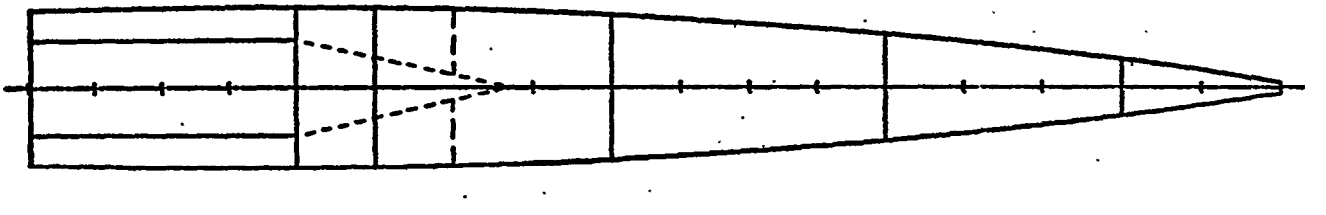

Figure-g. - Surface with Proposed Transverse Cut & Shadow

After all the surfaces have been examined, the cuts are assembled into one cross-section drawing which is displayed on the screen (figure 10). This display contains an exact geometric definition of the ship at this

cross-section. All the defined points and the drawing are marked and labeled for future use.

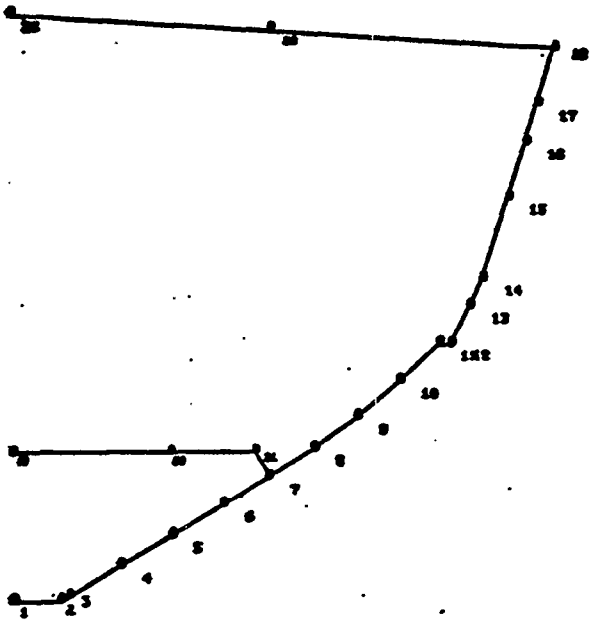

Figure 10. - Interface Representation of Cross-Section Model

The model used by SSDP is much simpler than this detailed definition so the engineer now selects pertinent pieces of-the display with which to build his model. The user enters (startpoint, endpoint) labels of segments he wishes to include. He does this at the prompt of the program to define the shell, innerbottom, deck, bulkhead, CVK, and plate longitudinal segments. Once this is done.SIP automatically assembles and formats the geometric information into an SSDP model. This geometry table is used to develop the SSDP input file and is saved for future use when the program runs in the reverse direction.

Once a geometry model is developed, the program goes on to assemble the rest of the SSbP Input file. This information includes loads, allowable stresses, design factors, etc; all the information needed to perform a normal structural design and longitudinal strength analysis. Here the engineer may choose information from a previous SSDP .file or from default values stored in

the program, he may enter new values as he wishes, or he may duplicate previous lines of values. As each line of information is generated the user is given the opportunity to modify listed values. Before each line is stored, the program checks all the values against maximum and minimum values stored in the program and counts the total number of fields entered to ensure no obvious mistake has been made.

After assembling the geometry, loads, and allowable stresses the output is a complete SSDP input file ready to run (Table IV).

Table IV. - SSDP Input File Created By Interface

```
110.0 10.6095 11.3062 4.0 7,O 7.0 21.0 15.0 500.0 1.1 0 0 0
11 6 1 0 1 1 2 0 0 0 8 1 0 1 0 0 2 0 0.10.0 740 7.0 80.0
1000.0 100.0 0.0625 0.5 1 0
1150.0 1150.0 8000.0 -10000,O -8000.0 10000,iJ lOOOO+O 10000.0
     0.000 OeOOO 0.000 0,998 1.460 3.550 4596 7+996 46596 8.245
     6,154 9.515 10.610 11.306 1.870 0.000 1.870 3,250 10.860 0,000
    10,678 6.750
1 2 3 4 5 6 7
10 11 7
8 9 3
1 8
1
8.0
11.306 2
11.0 3.0 100.0 100.0 5.0 36.0 7.0 7.0 1 1 1 0 4 5 6
11.0 3.0 100.0 100.0 8.0 36.0 7.0 7.O 1 1 1 0 4 5 6
11.0 3.0 lOO.O 10010 8.0 36,O 7.0 7.0 1 1 1 0 4 5 6
11.0 3.0 80.0 8060 0.5 36.O 7.0 7.0 1 1 1 0 4 5 6
11.0 3.0 6O.O 60,O 8.0 36.0 7.0 7.0 1 1 10 4 5 6
11.0 3.0 6040 6040 8.0 36.0 7.0 7,O 1 1 1 0 4 5 6
75.0 7.0 11.0 3.0 8.0 36.0 7.0 7.0 1 1 4 0 4 5 6
75.0 7.0 ll.0 3.0 8.0 36.0 7.0 7.0 1 1 4 0 4 5 6
75.0 7.0 1l.0 3.0 7.0 7.0 1 10 4 5 6
75.0 7.0 1l.O 3.0 7.0 7.0 1 1 0 4 5 6
1 17.0 100.0 7.0 11.0 4 5
```

USING STRUCTURAL INTERFACE PROGRAM FROM SSDP TO HULSTRX

The output from SSDP is a list of structural shapes and spacings defined on the different segments of the model, for each section of the ship. SIP, when used to go from SSDP to HULSTRX uses the SSDP output file and the geometry table previously created by the interface program to generate a HULSTRX input file. Scantling information must be matched from section to section and the lines lofted to form a complete structural drawing for all surfaces. To go from a discrete set of transverse structural definitions to longitudinally continuous members requires user intervention.

Each surface, starting with the shell and proceeding through decks and bulkheads, is displayed on the CRT along with all cross-section cuts examined by SSDP (figure 11). The stiffeners defined by SSDP are marked and labeled on the cuts in the proper locations. The engineer selects sets of points by their labels and enters them via the keyboard. These points are splined on the surface to create a definition of the structural trace. The points are saved to create a HULSTRX input file line, and they are also used to superimpose a line on the display. As the process continues, the surface becomes filled with structural traces (figure 12).

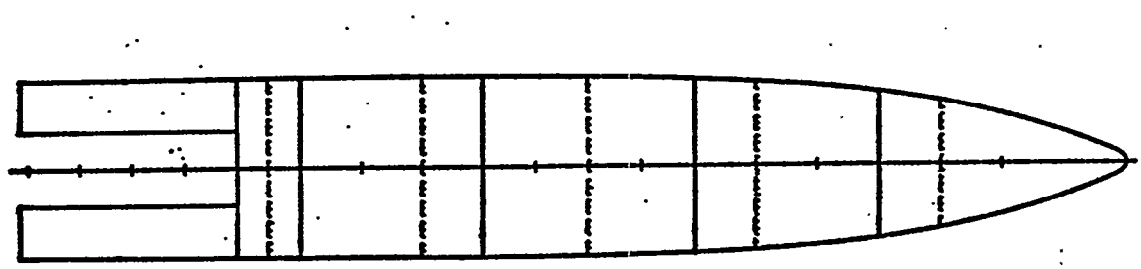

Figure 11. - Surface with SSDP Cuts

After selecting points for a line, the user must name the line. At this point he can include additional data such as intersection lines, startpoints, endpoints, start tangents, and end tangents.

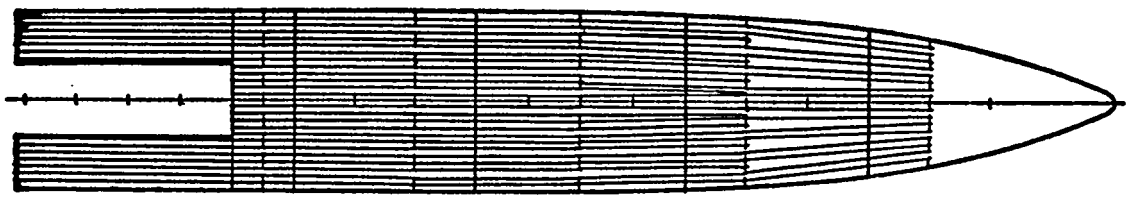

Figure 12. - Surface with Splined Lines

After finishing one surface the program goes on to display the rest of the surfaces. After the user defines lines for all these surfaces the program assembles a HULSTRX input file (Table V). This can be displayed immediately via HULSTRX, or it can be edited to match more closely the engineer's requirements.

Table V. - HULSTRX Input File Created By Interface

```
01 'SURFACE SN0608 DATE 6/28/83
02 EXPF FLSH
03
1514 N 4          IB STMP00 IB CHINE0 X 55.0 X 110.0
49 ST3001 ST3002 ST3003 ST3004 ST3005
1514 N 4 SP 1.0 T IB CH3000 IB CHINE0 X 35.0 X  55.0
49 ST3011 ST3012 ST3013 ST3014 ST3015
1514 N 4 SP -1.0  IB CHINE0 IB CDKM00 X 5.0 X 35.0
49 ST3021 ST3022 ST3023 ST3024 ST3025 ST3026 ST3027
1514 N 3          IB CL0000 IB STMP00 X 55.0 X 110.0
49 ST3006 ST3007 ST3008 ST3009 ST3010
1514 N 1 SP 1.13  IB CL0000 IB CHINE0 X 27.66 X 55.0
49 ST0017
1514 N 1 SP 2.26  IB CL0000 IB CHINE0 X 30.15 X 55.0
49 ST0018
1514 N 1 SP 3.39  IB CL0000 IB CHINE0 X 32.08 X 55.0
49 ST0019
13 ID ST2001   0.0 5.0   0.0 9.9  I CL0000 I CDKM00
13 ID ST2002   5.0 3.0   5.0 8.0  I CL0000 I CDKM00
13 ID ST2003  12.0 3.0  12.0 8.0  I CL0000 I CDKM00
13 ID ST2004  19.0 3.0  19.0 8.0  I CL0000 I CDKM00
13 ID ST2005  26.0 3.0  26.0 8.0  I CL0000 I CDKM00
13 ID ST2006  33.0 3.0  33.0 8.0  I CL0000 I CDKM00
13 ID ST2007  40.0 3.0  40.0 8.0  I CL0000 I CDKM00
13 ID ST2008  46.0 3.0  46.0 8.0  I CL0000 I CDKM00
13 ID ST2009  52.0 3.0  52.0 8.0  I CL0000 I CDKM00
13 ID ST2010  58.0 3.0  58.0 8.0  I CL0000 I CDKM00
13 ID ST2011  64.0 3.0  64.0 8.0  I CL0000 I CDKM00
13 ID ST2012  71.0 3.0  71.0 8.0  I CL0000 I CDKM00
13 ID ST2013  78.0 3.0  78.0 8.0  I CL0000 I CDKM00
13 ID ST2014  85.0 3.0  85.0 8.0  I CL0000 I CDKM00
13 ID ST2015  92.0 3.0  92.0 8.0  I CL0000 I CDKM00
13 ID ST2016  98.0 3.0  98.0 8.0  I CL0000 I CDKM00
13 ID ST2017 104.0 3.0 104.0 8.0  I CL0000 I CDKM00
13 ID ST2018 110.0 3.0 110.0 8.0  I CL0000 I CDKM00
99
```

APPLICATION TO THE SHIP DESIGN PROCESS

The Structural Interface Program provides a direct link between the Navy's primary structural design program and the Navy's structural data base. The direct link reduces the structural designers workload, increases accuracy of the designers work, and provides the designer with a graphical representation of his work while he works. Since SSDP is the center of the Navy's structural design process, the Interface program is a important link in the Navy's CSD system.

This direct link has important implications for the ship design as a whole. The quality of a ship design depends both on the number of variations examined and iterations performed, and on the amount of communication between design disciplines. The more variations studied and the more iterations performed, the more optimized the design. Bypassing manual data transfer between programs decreases the cycle time, thereby allowing more analyses to be performed.

The amount of communication between design disciplines is even more important, as it determines the quality of data available about other ship systems. Any analysis for a specific discipline requires information from other disciplines and systems. When this information is automatically available to a computer program from a predefined location in a data base, bureaucratic delays are bypassed and the design is drawn closer together.

In terms of the hull subsystem this means that changes in the hull form can be immediately incorporated by the arrangements group and by the structures group. Likewise, changes in the ship structure can be incorporated by the weight group so that an up-to-date structural weight is always available. Finally, changes in structural shapes or sizes that affect

propulsion or distributive system locations can be recognized.

The Structural Interface Program is another helpful tool in the Navy's CSD system, drawing the Navy one step closer to its goal of having a completely integrated Computer Development System.

REFERENCES

[1] Byler, Eric and Ron Walz, "U.S. Navy CAD Program for Hull Structure," 1982. Paper presented at the 4th International Conference on Computer Applications in Automated Shipyard Operations and Ship Design, Annapolis, Mary1 and, June 1982.

[2] Byler, Eric and Dave Helgerson, "U.S. Navy CAD/CAM Program HULSTRX," Proceedings of the REAPS Technical Symposium, Sept. 1981.

[3] Walz, et al., "Structural Synthesis Design Program," DTNSRDC Report 77-0032, 1977.

[4] Wiernicki, et al., "The Structural Synthesis Design Program - Its Impact on the Fleet," Naval Engineers Journal, Vol. 95, No. 3, May, 1983.

[5] "Hull Structural Data Base Creation Program," Vols. I-III, Naval Sea Systems Command Code 55Y, 1981.

KEEPING UNIT OUTPUT LOW WHILE INCREASING PRODUCTIVITY

W. Z. Hayman III
President and General Manager
Missouri Valley Shipyard
Leavenworth, KS

Mr. Hayman joined the shipbuilding industry following release from the U.S. Coast Guard in 1969 as the Commercial Program Planner at Ingalls Shipbuilding. Following cessation of commercial construction, he was assigned to manage Litton's ASBCA Claim on the SSN 680 contracts. He returned to commercial construction at St. Louis Ship as Production Planner and later as Fabrication Manager. In 1980, Mr. Hayman was recruited as General Manager of Missouri Valley Shipyard.

Mr. Hayman has been published in the Maritime Reporter and the Waterways Journal.

ABSTRACT

Missouri Valley Shipyard has survived through the years despite the limited, eight month repair/navigation season on the Missouri and an obsolete, World War II era new construction facility.

Ownership initiated modernization had to contend with the Winter river closing, limited new vessel winter storage space and equally limited working capital . Other constraints included an eight foot grade separation and an ongoing new construction program.

Of the three schemes developed, use of a modular-extrusion method was selected as it allowed concentration of effort, enclosed hull erection, minimum interference with current production and intermixing of product lines.

KEEPING UNIT OUTPUT LOW WBILE INCREASING PRODUCTIVITY

Missouri Valley Shipyard on the Missouri River in Leavenworth, Kansas, has been in operation since 1939 and was closed at the end of this July because of lack of business. The shipyard had survived through the years despite the limited 8-month navigation season on the Missouri and an obsolete World War II era new construction facility. Both shipyard ownership and management were aware of the obsolete conditions, the most obvious being that all operations were outside, exposed to Kansas weather.

With the 8-month navigation season on the Missouri River new construction was essential to year-round operation of the shipyard. In response to the continuing demand for hopper barges, when I started work at the yard in 1980 the previous management had embarked on a serial construction program, including the rake barge shown in this picture. Other jobs undertaken were overhaul of Coast Guard, Corps of Engineers and other vessels as we had the facilities to haul them out of the water and could do the work during winter lay-up. The first year's results of the outside, year-round barge construction combined with winter lay-up of the Coast Guard cutter and in season repair jobs, was

disasterous. We experienced a $400,000 bottom line loss at the end of 1980.

Any moderization project, though, had to keep in mind the fact that we could not launch and deliver barges for up to four months out of the year. Limited wintertime parking space for barges that were built and could not be launched existed, but still this remained an overall constraint on the total volume output that we wanted to generate. Combined with this was the limited working capital as we worked toward being a stable financial entity. Thus, the title refers to keeping unit output and the related cash flow volume at a level that we could handle both physically in terms of the facility and parking space available, as well as not overstraining our financial resources. At the same time we had to do something about productivity as some of these barges, at least the initial early ones, were running 9,000 man-hours and higher. We stopped keeping records after 9,000 hours, though. As many of you know, in comparison, some facilities are capable of building a barge in 2,800 man-hours, or less.

In 1981, during the second year of the serial barge production effort, we were able to bring the man-hours down to 4,500 per barge. This was despite a change from box barges that were intially started to an obsolete rake design barge that required the heavy rake to be built and

hung in port and starboard halves. Another interference that year was the onset of the moderization project which did require the removal of two cranes that serviced the subassembly areas. Operating results for 1981 brought in approximately a $100,000 profit or a half million dollar turn-around in one-year's time. Thus, return on investment for the building project became Based on the 4,500 hours and 12 work days per barge, rather than the 9,000 man-hour figure.

A 1975 plat of the shipyard showed 18 acres of land sandwiched between the Missouri River and the Missouri Pacific mainline railroad tracks. The yard was bounded on the south side by Five Mile Creek, which was a major drainage ditch for the City of Leavenworth, and on the north by a property boundary. The lower third of the shipyard, the wider part between the tracks and the river, was separated from the upper part by Four Mile Creek, which is a relatively minor drainage ditch. In 1980 the production effort was limited to the lower portion of the shipyard between Four and Five Mile Creeks. The existing construction jig was immediately to the west of the launchways separated only by the gantry track.

The-gantry crane serviced the press brake area to the north of the construction jig transporting bent plates past the construction jig to the subassembly areas on the

south side. Not only did it hang all sections on the barge during erection of the hull, but it also serviced the sub-assembly areas which included side section, transom and bottom plate welding areas.

The crane itself was purchased after World War 11 from a Kaiser shipyard on the West Coast. The people that came in to assist with the reerection did not know the original source of the crane, which was an old crane at the start of World War II. I still don't know the source of the crane. There was no technical information on the crane and any replacement parts had to be fabricated on the spot. The result was that we could count on one breakdown a week that resulted in anywhere from 4 hours to, in one case, a 2-week loss of production.

On the south side of the yard adjacent to Five Mile Creek was a fenced off area that was used for winter storage for the Coast Guard vessels. Not only did the winter-storage require a substantial amount of prime space, the transfer tracks leading to the storage and the gantry tracks used to relaunch the vessels occupied approximately one-third of the lower shipyard.

The initial plan for modernization looked to the upper yard north of I-mile creek which was essentially vacant and had been used as a shale pile from a discontinued coal mine in the vicinity. At that time access to the water-

front was almost impossible, and there was very little level land throughout the upper yard area. Any facility built in the upper yard would have to contend with both the approximately 8-foot grade separation between the upper and lower yard and the existence of the drainage creek. The initial concept was to do fabrication work and subassembly work in the upper yard and pass it to the gantry in the lower yard. This seemed to call for an excessive amount of material handling, and I opted for the Coast Guard storage area and the part of the property that was tied up by the transfer tracks.

Two schemes were developed for building an enclosed-facility in the lower yard. The first one was a north-south barge building that would allow construction of a barge in a more conventional manner, building an entire side section the length of the barge and hanging it in place. I felt that this type of facility was inflexible once the supporting equipment was in place for barge construction and consequently, we were going to be stuck with building barges from here on out.

The second approach developed was an east-west building that would have to build. 200-foot barges in sections, push them out the door, and somehow, join them all together.. Although the initial thought was that this may not be the most efficient way to build barges, certainly

it was the most flexible in that we could build an 80-foot plus tow-boat or larger tow boat in two sections within the facility and mimic the same system that we were using on barge construction.

The geometry of the situation allowed for parking a complete barge between the building and the launchway approach area so that we could have a completed barge outside the building door, another one in the position to move over onto the launchways, and a third one on the launchways itself. During wintertime when we couldn't launch, we could back the barges up to the west and store up to three barges in that position. This gave us room for a total of five barges in the storage positions plus any that we chose to hang off on the launchways itself. In dollar terms, this was $1.5 million worth of new equipment sitting around waiting for a paycheck to come in.

Satisfied that we had a viable approach, we concurrently took core samplings that indicated that bedrock was there, although it was some 60 feet down. We started a search for an engineering firm, and for two used bridge cranes that a building could be sized to. The search for the bridge cranes led to Detroit, where two rather derelict cranes were found; but along side them was a disassembled mill-type building. On investigation it turned out to be a 1954 addition to the American Car & Foundry Building in

downtown Detroit. Shortly afterwards, Black c Veatch in Kansas Cay was selected as the consulting engineering firm, and following an on-sight inspection of the disassembled building, concurred that this was indeed a very economic way to proceed with the construction.

Putting all of these elements together resulted in a plot plan that was submitted to the Corps of Engineers for approval and inquiry as to whether any specific building permits would be required. We received a response about a week and a half later that only a wetland's survey would be required, and that survey was completed in less than one week's time following the response. Working from the conceptual drawing, Black & Veatch then generated the floor plan that you see in front of you, as well as back-up details of foundations and structural steel, including the modifications required to t,he disassembled building. Grouted piles were placed in the fall of 1980 and then construction had to be suspended because of the sky-high interest rates and our inability to sell industrial revenue bonds. By the following spring, interim financing was arranged, and we proceeded with the installation of the foundation including the retaining walls. While the foundation work was in process; the steel was being shipped from Detroit to Leavenworth where it was then sandblasted, painted and later, erected, all by shipyard crews. The accompanying photographs

show the building in its current state when construction was suspended in mid-1982.

With the decision to use the disassembled building, two cranes were ordered from SEC0 Crane Company in Terrell, Texas. Each crane had two 12-l/2 ton hooks on it, with both cranes designed to operate in concert to make a combined 50-ton lift. The catwalks and dummy cab were added by shipyard crews and both cranes were hung in early 1982 with the shipyard's gantry crane.

The crane pennant control has a switch for simultaneous operation of both trolleys and hooks or selected use of either trolley. During material handling operations, the operator could take the pennant up into the dummy cab and operate the crane from there.

Black & Veatch's industrial services division thought the whole project was interesting enough that they prepared the following publicity release in early 1982.

At the same time, the design for a modular barge was being perfected, one that could be both built on the existing barge jig and then when the time was ready switched to in building construction. Thus, use of the facility had preceded to the extent shown on this slide where the module would be constructed on the' building jig, moved to the east, and joined to the preceding module, and then pushed

out the door to the side transfer position and over to the launchwaps.

Development of a lay-down plan within the building showed that we had room for building all sides, both transoms, and bottom assemblies concurrent with the modular erection and welding positions. Thus, some flexibility existed for man power assignment within the building by assigning people on and off of the side section and transom construction. Review of the operations and the time expected at each step in the sequence indicated that we could probably produce a module every two working days. With total manning about the same, we expected to be able to build a barge every six days, effectively cutting our 4,500-man hours per barge in half.,

In general, we thought that the erection and fitting of the shorter module side sections would go much more rapidly than the corresponding work on a full length barge. One-anticipated saving was the decrease in cumulative misalignment between wing frames and floor frames in the shorter module sections. In erecting a full-length barge side to an innerbottom, this gap can accumulate to one or two inches at one end of the barge and can require considerable rework to correct. By designing the barge so that the butts in the steel plating coincided with the joining butts, no additional footage was added.

Previous experience of joining modules at Ingals Shipyard% Pascagoula indicated that modular joining was as simple in practice as in theory, and we hoped it would continue to be so. In this case, two innerbottom plates were left out at the end of the center section, allowing complete open access to the outer shell for making these butts. Cut-outs at 4 points in the hopper allow for access between the wing walls and the center of the barge as well as simplifying installation of the last two innerbottom plates.

This is a photograph of one of the modular barges, the STL 231B shortly before launching, and this is a photograph of another following launch, afloat in the Missouri River. As the building project was haulted for financial reasons, none of these 15 barges that were eventually built were built as true modulars but rather were built on the original construction jig of the shipyard.

Subsequent construction at the shipyard include the harbor boat "Pin Oak" that could have been built in its entirety within the hull assembly building with the exception of the pilothouse.

A recent request for bids for construction of 11 Coast Guard buoy barges was particularly attractive to us, as this construction would have been ideal for the hull assembly building. Unfortunately, 35 other shipyards had

similar ideas and bid the same contract. I like to think that 26 bid higher than Missouri Valley Shipyard, but unfortunately, there were 8 that bid lower. Bids ranged from the lucky low bidder at slightly over $4 million to our ninth place $6.5 million, with a high bid of over $14 million.

Not only does this shipyard have a new enclosed facility at the 70% completion point, but also has an excellent work force in a low cost of living area, with the result that we were able to keep the wage rate to a very competitive level. The labor turn-over rate is extremely low for a shipyard, in fact, we have had two World War II veterans retire within the past year.

I want to leave you with the impression that there is an excellent little shipyard in Kansas, and when things turn around, somebody should take an interest in reopening it.

"DOES THE FUTURE OF U.S. SHIPBUILDING LIE INLAND?"

J. W. Boylston
Giannotti & Associates, Inc.
Annapolis, MD

Mr. Boylston is a graduate of the U.S. Merchant Marine Academy and the University of Michigan with degrees in Marine Transportation and Naval Architecture and Marine Engineering. With nearly 20 years of experience in ship design, construction and operation, he has been involved in the construction and conversion of nearly 70 vessels. Mr. Boylston is active in the Society of Naval Architects and Marine Engineers, having served on the council and panels on hydrodynamics, maneuvering, nuclear propulsion, coatings and vessel instrumentation. He has authored numerous technical papers and a chapter in the new SNAME publication, Ship Design and Construction.

Johnathan M. Ross
Giannotti & Associates, Inc.
Annapolis, MD

Mr. Ross is a graduate of Carnegie-Mellon University and the University of Michigan, and holds degrees in Mechanical Engineering and Naval Architecture and Marine Engineering. His experience includes nearly six years service in the Navy with submarines and on a submarine repair ship as engineering duty officer. Other experience includes applied ocean engineering and OTEC technology development. He has published articles in a number of professional journals and has delivered papers in the U.S. and abroad. Mr. Ross is a registered professional engineer and a member of several professional societies.

ABSTRACT

As the marine industry laments on the noncompetitiveness of our offshore shipbuilding capability, an efficient inland marine building community remains competitive in the international market. This paper theorizes that since it is impossible to upgrade work rules and difficult to upgrade equipment, perhaps offshore shipbuilding should turn inland and start anew. Launching facilities, water depths and crane facilities will all be reasons for difficulty in building inland. This paper will show one concept for building a 30,000 DWT coastal tanker inland.

INTRODUCTION

As the United States marine industry laments on the noncompetitiveness of its offshore shipbuilding capability, an overlooked potential exists which could reverse the trend. The coastal yards face high production costs and find it difficult to improve their position through modernization. Not only must large sums of capital be raised, but work rules may diminish the benefits of adopting modern equipment and techniaues. On the other hand, highly competitive and aggressive inland marine building facilities have established themselves in the U.S. market without subsidized or naval work. These inland yards, though held back at times by shallow water, modest crane capacities and other construction considerations, today offer a skilled workforce and efficient approaches toward lower cost marine construction.

This paper will explore the idea of constructing oceangoing vessels at inland yards and will provide some comparisons between the inland yards and their coastwise competitors. The authors conclude that perhaps certain offshore shipbuilding should turn inland and start anew.

SHIPBUILDING BY INLAND YARDS

Inland yards are those yards which are located along the rivers of the United States. In general, inland yards are known for their construction and repair of barges, tugs, workboats and crewboats. A listing of the major inland yards is presented in Table 1 (Reference 1). These yards are divided into two categories. Category A consists of yards which handle vessels over 400 feet in length, and Category B is made up of yards handling vessels between 150 and 400 feet in length. Although only three Category A yards are shown, the authors contend that a significant number of the smaller yards would readily expand to Category A capabilities if they were given the potential of contracts for shipbuilding. Plost of the yards now construct and repair self-propelled vessels, although some of the yards concentrate only on barges (Reference 1).

Past Construction Hinderances

In the past, five factors have prevented inland yards from building offshore tonnage:

TABLE 1

LISTING OF INLAND SHIPYARDS

Category A (Vessels Over 400 Feet in Length)

Dravo Corporation, Pittsburgh, Pennsylvania
Jeffboat, Inc., Jeffersonville, Indiana
St. Louis Ship, St. Louis, Missouri

Category B (Vessels 150-400 Feet in Length)

Delta Concrete Company, Bellaire, Ohio
Dravo Steelship Corporation, Pine Bluff, Arizona
Greenville Shipbuilding Corporation, Greenville, Mississippi
HBC Barge, Inc., Brownsville, Pennsylvania
Inland Marine Constructors, Inc., Evansville, Indiana
Marathon LeTourneau Company, Vicksburg, Mississippi
Marathon Shipbuilding Company, Vicksburg, Mississippi
Marine Welding & Repair Works, Greenville, Mississippi
Maxon Marine Industries, Inc., Tell City, Indiana
M/G Transport Services, Inc., Gallipolls, Ohio
Mississippi Marine Towboat Corporation, Greenville, Mississippi
Missouri Dry Dock & Repair Company, Cape Girardeau, Missouri
Nashville Bridge Company, Nashville, Tennessee
Portsmouth Docking Company, Inc., Portsmouth, Ohio
Caruthersville Shipyard, Caruthersville, Missouri
Twin City Shipyard, Inc., St. Paul, Minnesota
United States Steel Corporation, Ambridge, Pennsylvania
Walker Boat Yard, Inc ., Paducah, Kentucky

- Lack of water depth for launching large vessels
- Lack of air draft required for large vessels
- Lack of equipment for working with heavy steel to be formed into highly shaped hulls
- Lack of experience in outfitting sea going ships
- Lack of experience in steam propulsion plants.

Are these factors still reason enough to preclude inland yards from constructing offshore ships? We will examine each in turn to find the answer for today's market.

The lack of water depth is the first factor to consider. It becomes apparent, as time goes on, that it is nearly an economic impossibility to dredge and maintain deep channels and berths at all major U.S. ports. The amount of cargo, even in the best of times, will simply not support such an undertaking. The obvious solution is to design and build wide, shallow draft ships that have sufficient deadweight capacity to be competitive in world trade. MARAD has funded studies on this very subject (References 2-4) dealing with bulk carriers and ocean-going collier designs. It is apparent that a ship constructed to a shallow draft criteria will have a shallow draft not only while in operation, but even more so when launched. For example, the float-out drafts are on the order of 9-11 feet for some very large crude carriers, which have very deep drafts in loaded operation. Drafts on the order of 9 feet are quite easily accommodated by almost all the waterways which serve inland shipyards listed on Table 1.

Air draft for the height of the launched ship above the water has been considered a problem for inland yards. One major coastal shipyard however, Avondale Shipyards of New Orleans, has for years built offshore vessels and has successfully contended with a fixed bridge. By leaving off masts and/or stack extensions or by designing ships with these heights in mind, this impediment can be minimized.

The next factor to consider is the problem of working with heavy steel to be formed into highly shaped hulls. This problem arises because of a general lack of heavy bending equipment in the inland yards. However, hulls need to be highly shaped only below the waterline for good performance, and even then just the bow and stern contain compound curvature. The recent European development of a special bulbous bow in which there is little compound

curvature allows such bows to be fabricated by inland yards (Figure 1). Likewise, sterns have changed by replacing the traditional cruiser stern by the flat transorp stern, using knuckles and a flat plate topside above the water (Figure 2).

Of course, these bow and stern innovations do not eliminate the need for formed steel in ship construction, even if the need for compound curvature has been greatly reduced. Some designs could use higher strength steels to provide thinner hull plating. The use of flame forming in conjunction with pin-jigs makes forming plate economical. Additionally, in U.S. coastal trades for certain types of cargoes a segregated ballast system is required. To satisfy such a requirement one common approach is to build a double hull structure with both the inner and outer skins of significantly less thickness than in a single hull ship. The coastwise bulker/tanker described later in this paper is such a design, with a skin no greater than l/2-inch in thickness.

The next factor to examine is the consideration that outfitting of offshore ships is too sophisticated for inland yards. Advances in outfitting have made this part of ship construction much less demanding and also much less labor intensive. The inland yards can take advantage of new pre-engineered outfitting systems such as Isolamin, Dampa and Rockwool. Figures 3 and 4 illustrate this point. Figure 3 illustrates the traditional joiner construction in which bulkheads are penetrated by all the various electrical, plumbing, and HVAC systems. Such an installation can be vastly simplified by the Dampa approach shown in Figure 4. As the overhead is a fire barrier, the number of bulkhead penetrations is vastly reduced. It is reputed that the level of skill required for such installations, as well as the total manhours, are reduced.

The final factor for examination is the lack of experience by inland shipyards in working with steam propulsion plants. Today, steam propulsion has been largely replaced by diesel, and diesel propulsion is one area where inland yards have years of experience.

In conclusion, we believe all five factors have been overcome by new trends in the maritime industry.

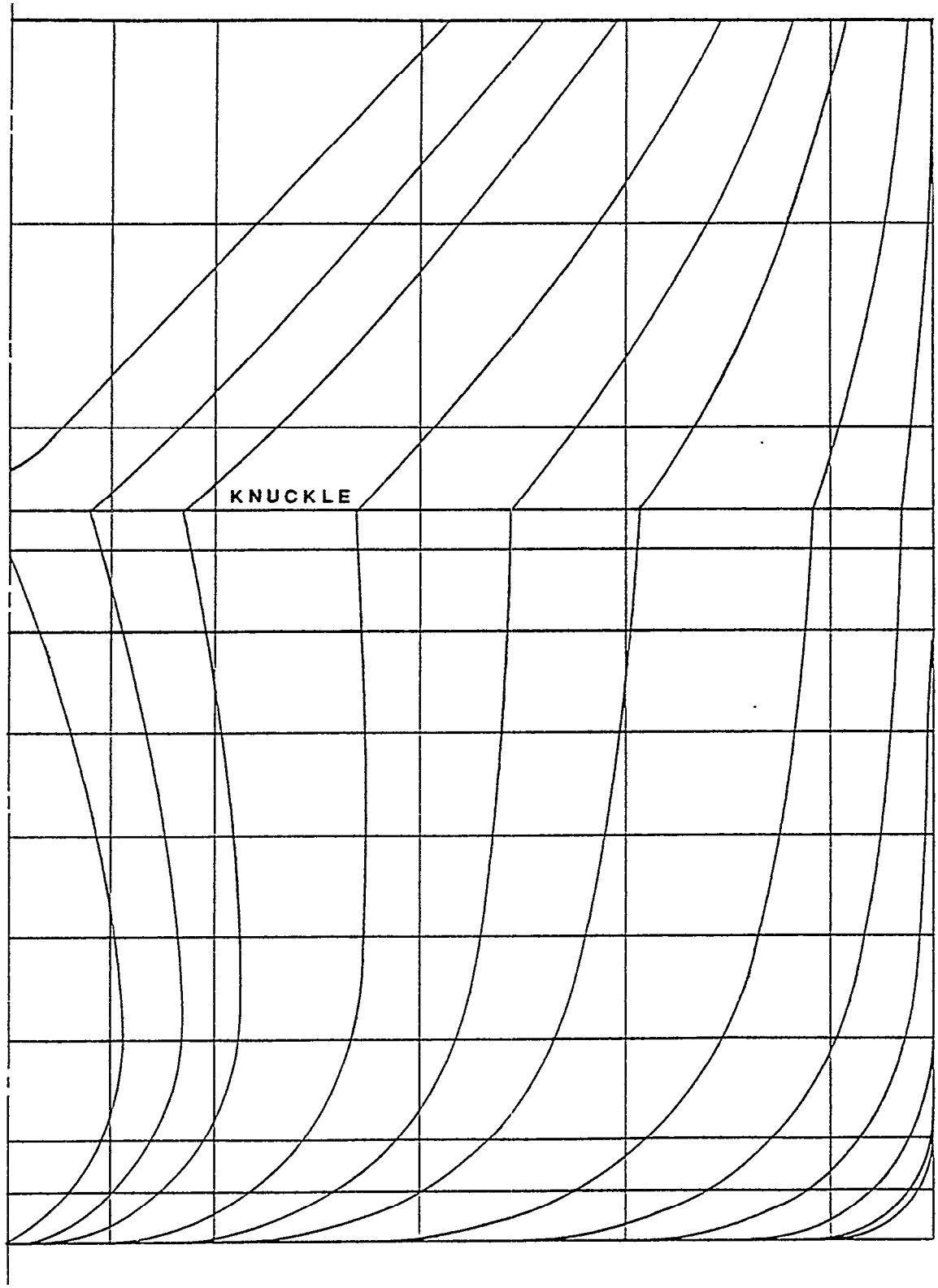

FIGURE 1
BULBOUS BOW DESIGN
WITH LITTLE COMPOUND CURVATURE

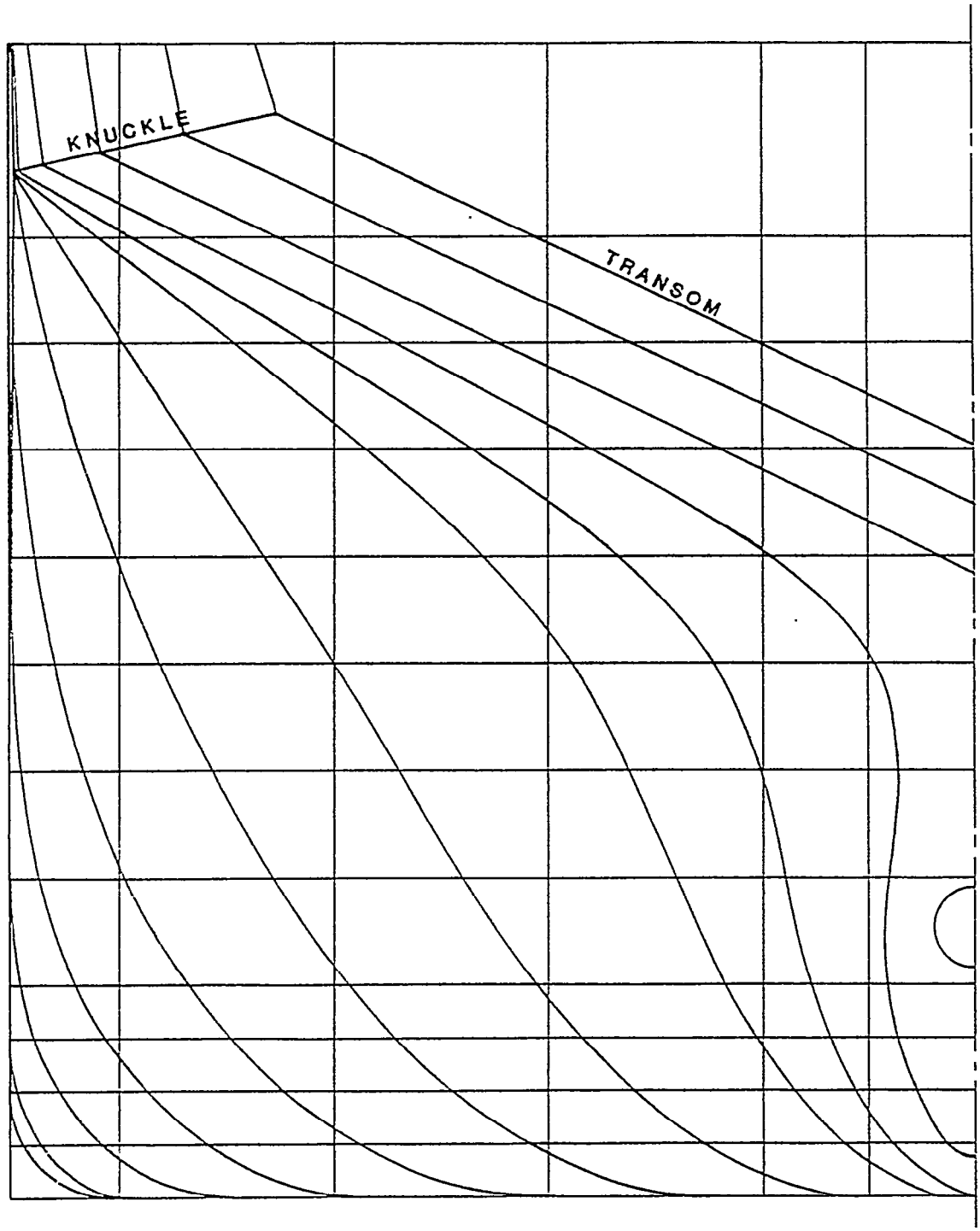

FIGURE 2
FLAT TRANSOM STERN

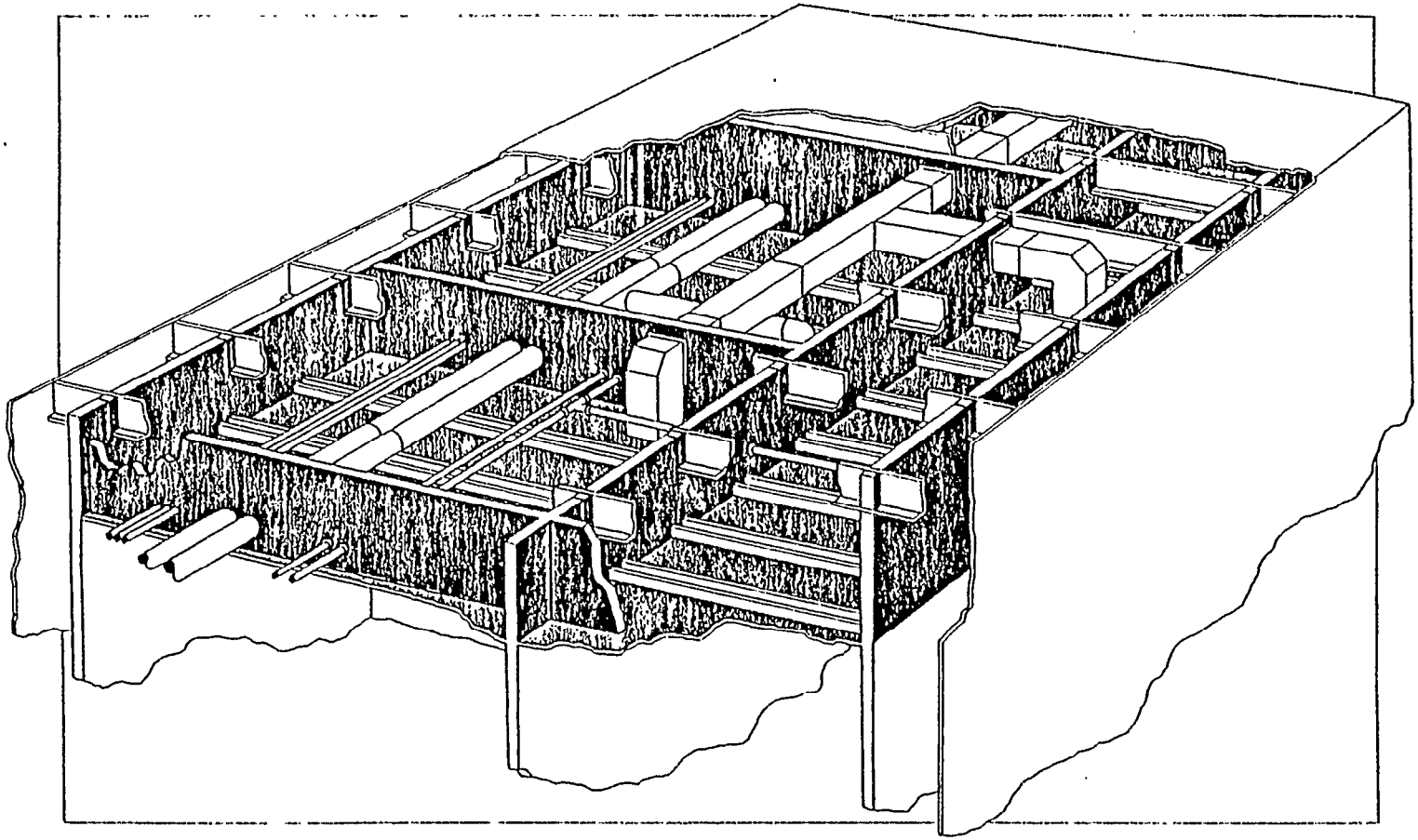

FIGURE 3
TRADITIONAL JOINER CONSTRUCTION

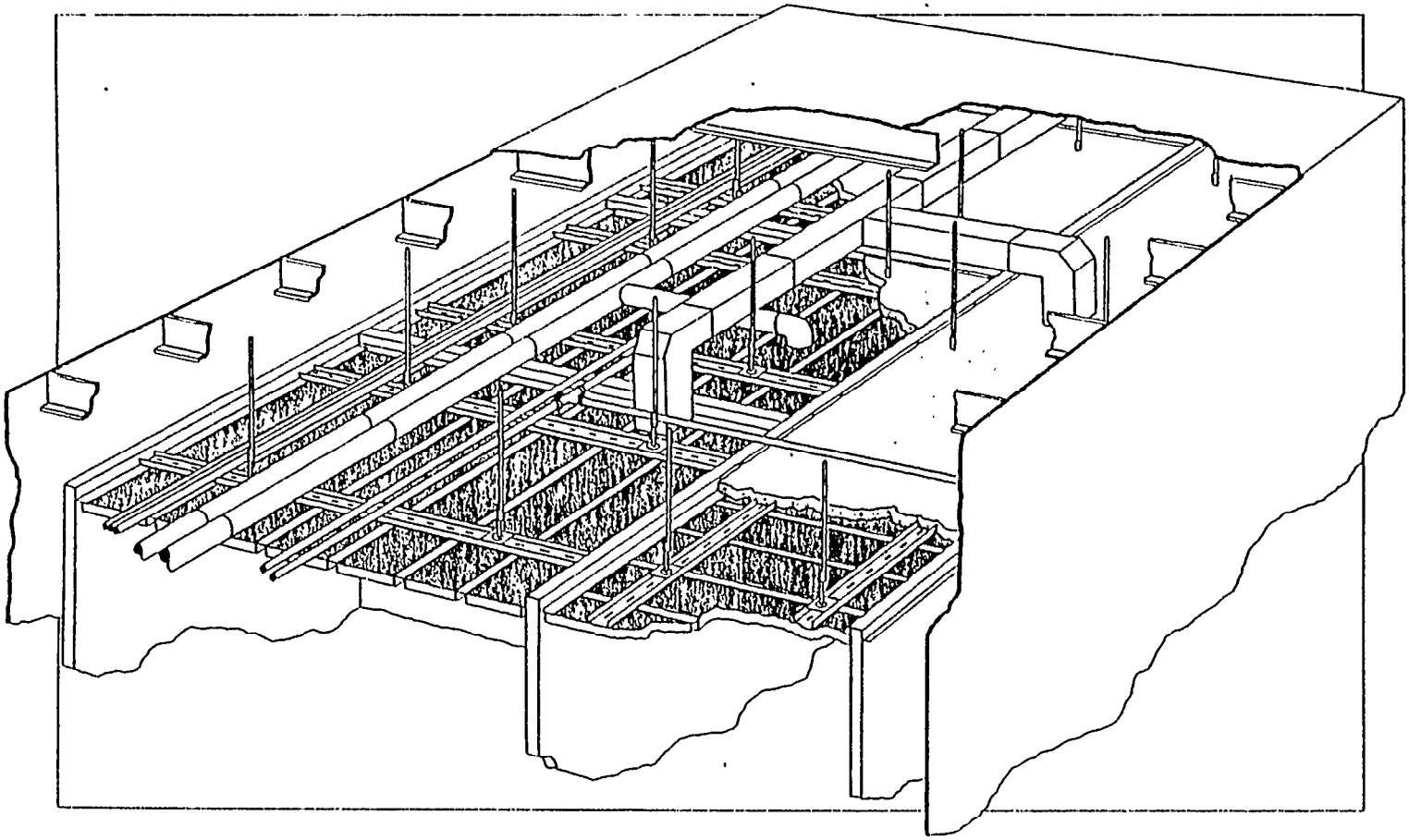

FIGURE 4
DAMPA JOINER TECHNOLOGY

Coastwise Bulker/Tanker

Now,, as an illustration, an approach will be described for construction of a coastwise bulker/tanker by an inland yard. First, the vessel will be described and then the construction method will be discussed.

The coastwise bulker/tanker design was conceived by Giannotti & Associates, Inc. as a way for one hull to meet changing needs during its service life (Reference 5). The vessel, as delivered, is an OBO especially suited as a coastal products carrier or grain carrier in foreign trades. With minimum dockside conversion, the ship becomes an efficient containership. Also, because of its large depth, it can be efficiently jumboized from a base length of 600 feet to a length of 744 feet LBP. The vessel's principal dimensions are given in Table 2, and its inboard profile and plan drawings are shown in Figure 5. Figure 6 illustrates the midship section as a bulker/tanker and Figure 7 as a containership. Key design features include:

- Oil tight hatch covers, removable for using the holds for bulk cargo storage
- Double skin construction coupled with corrugated longitudinal and transverse bulkheads to simplify tank cleaning from bulk to oil trades
- Wing and double bottom tanks to meet IMO required ballast draft.

Several points should be made concerning vessel construction. Our survey indicates that most inland yards have side launching ways as they are situated on relatively narrow rivers. Way capacities vary. However, in no case are existing way structures sufficient to support our coastwise bulker/tanker. Figure 8 Shows the weight distribution curve for our completed tanker/bulker. New ground ways would have to be installed between existing ground ways to provide a load carrying capability in this case of 16-28 (depending upon the extent of construction on the ways) long tons per foot.

Production rates for ships on ways and ships afloat should force as much completion on the ways as possible. HOWeVer , if way capacity could not be upgraded, it would be possible to launch the double bottom and some of the side shell with completion of the hull structure afloat.

Crane capacities and, more importantly, height and outreach requirements exceed most existing inland yard crane capabilities. Initially, high capacity truck cranes could be used for work on the ways and light duty construction

Loa	625′
Lbp	600′
B	106′
D	55′
T	41′
$\triangle$fl	59,500 LT
DWT	45,000 LT

TABLE 2
COASTWISE BULKER/TANKER
PRINCIPAL DIMENSIONS

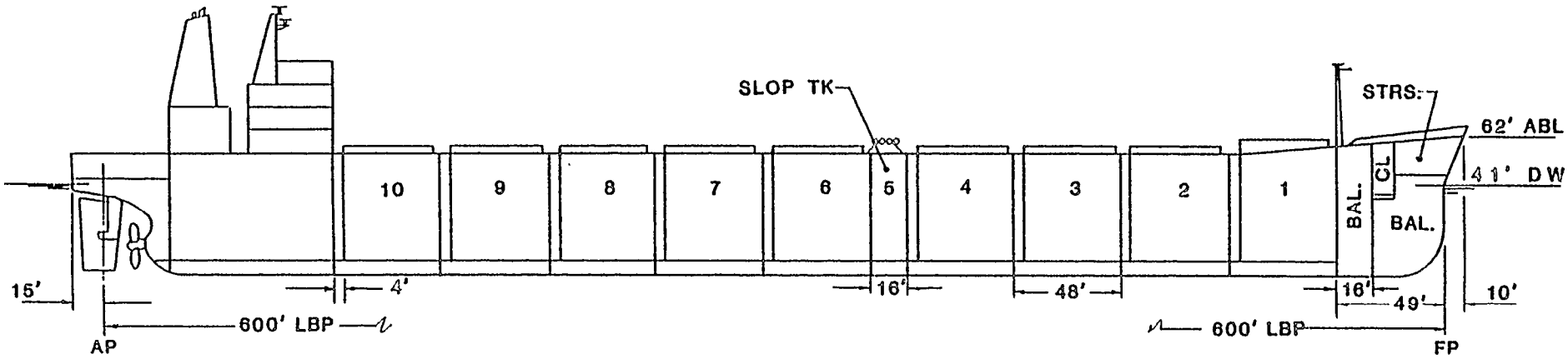

INBOARD PROFILE

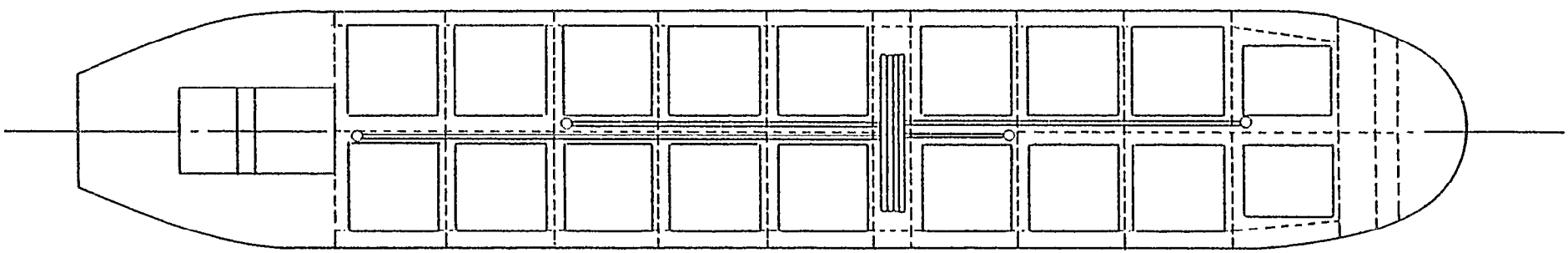

PLAN

FIGURE 5
COASTWISE BULKER/TANKER
GENERAL ARRANGEMENT

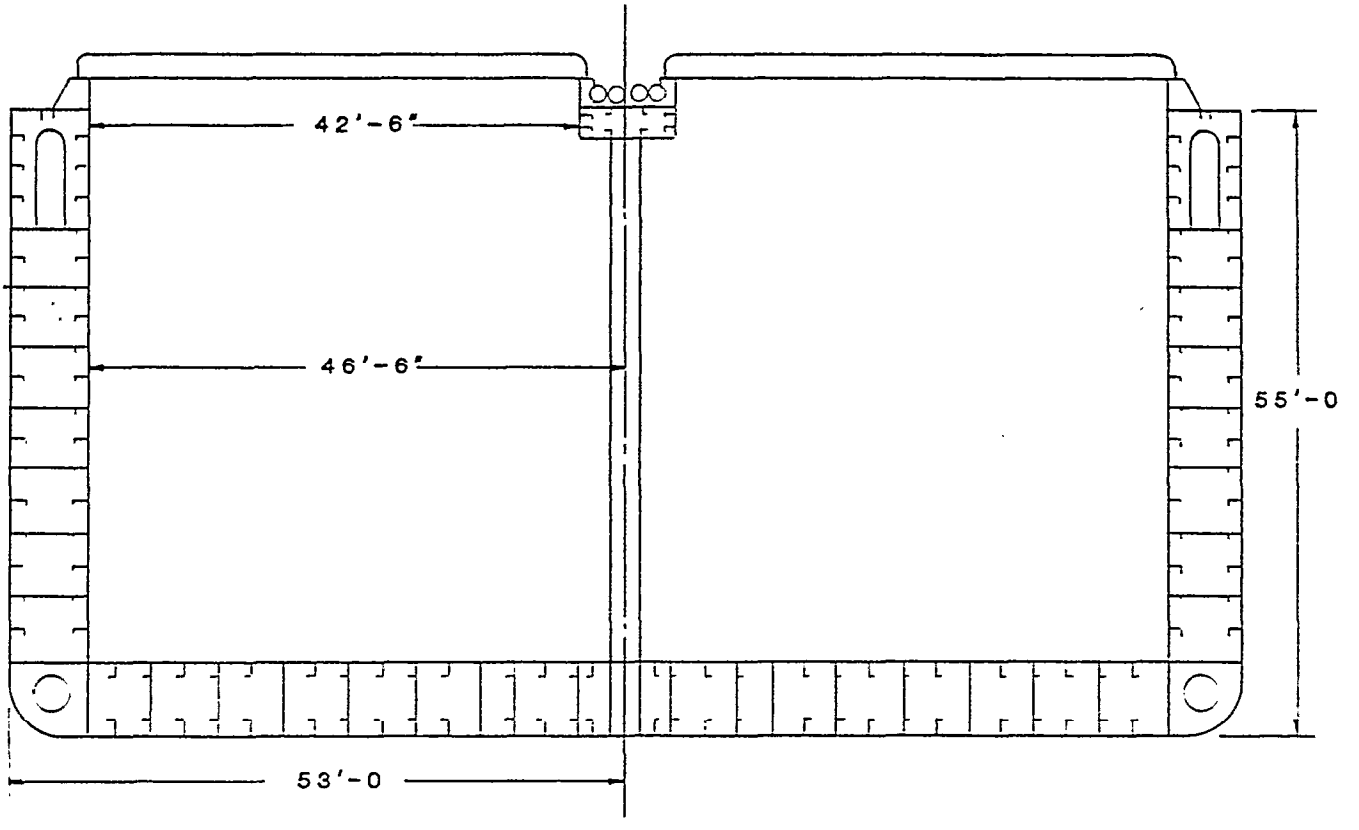

FIGURE 6
COASTWISE BULKER/TANKER
MIDSHIP SECTION

DIMENSIONS OF CARGO TANKS ALLOW A 10 WIDE 6 HIGH STOW OF 40′ CONTAINERS

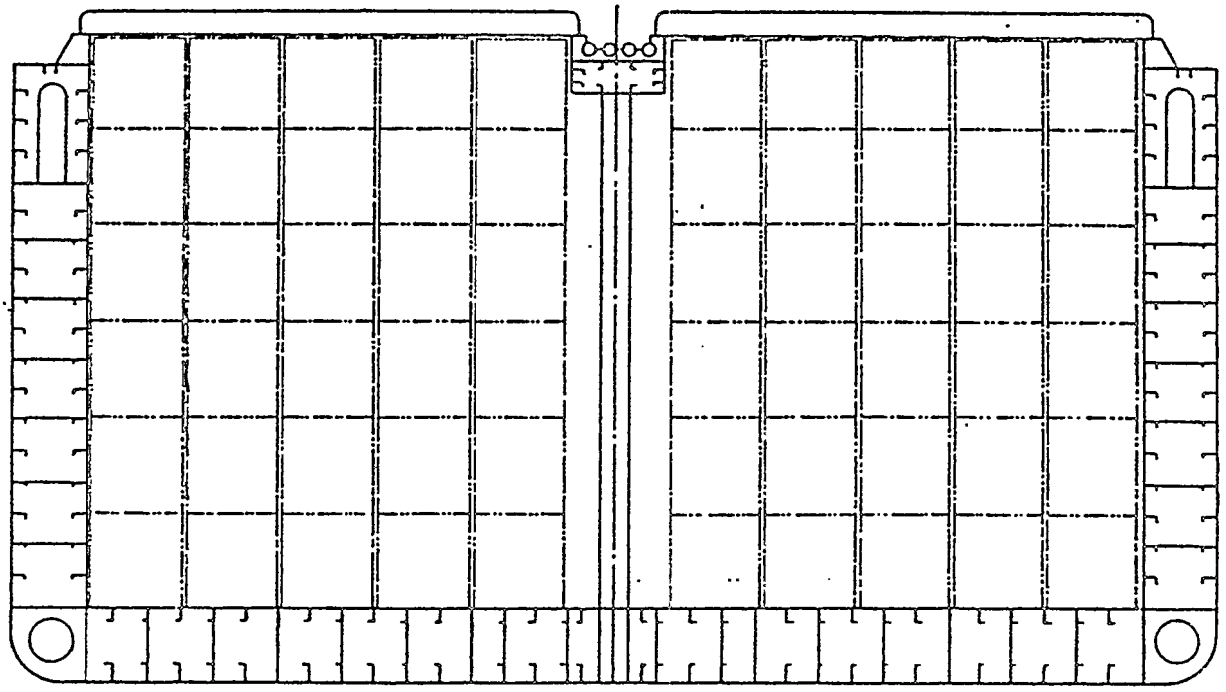

FIGURE 7
CONTAINER SHIP MIDSHIP SECTION

BUILDING WAYS LOAD REQUIREMENT

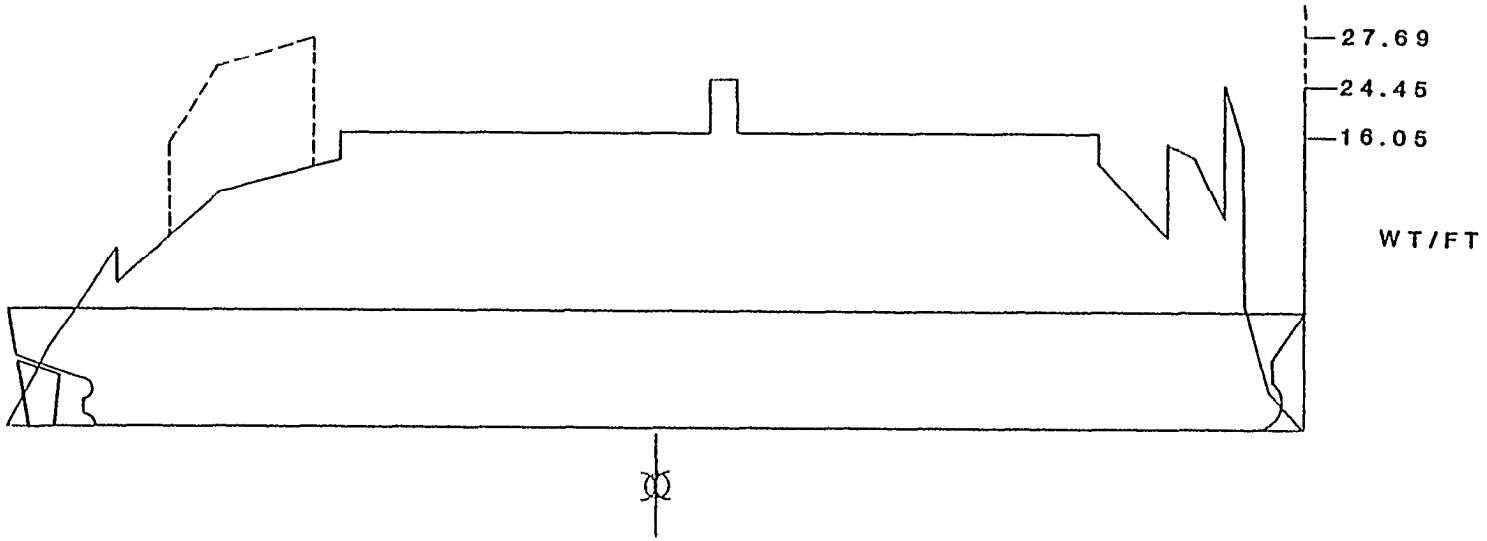

-HULL STEEL & OUTFIT

-NO MACHY OR DECK HOUSE

---WITH MACHY

FIGURE 8
COASTWISE BULKER/TANKER WEIGHT DISTRIBUTION CURVE

type cranes could be used for outfitting afloat,, For the long term, rail mounted whirley cranes would be needed in both locations. For illustrative purposes, depending upon river depth and yard way capabilities, we have estimated three float out conditions as follows:

I. Float out without machinery or deck house

II. Float out with machinery, but without deck house

III. Float out with machinery with deck house placed on the foredeck.

Vessel drafts for these three conditions are shown in Table 3.

Three sample inland yards were selected to check geographic constraints. These yards are Dravo Corporation; Jeffboat, Inc.; and Nashville Bridge Company (NABRICO). Their locations are shown in Figure 9, and their dimensional constraints are shown in Table 4. It is evident that these yards, within their dimensional constraints, car all construct the vessel. The vessel design takes advantage of simple bow, stern, and midbody construction and outfitting, and has diesel propulsion, Hence, it is an example of the construction by today's inland shipyards of an offshore vessel of significantly large size.

Today's Inland Shipbuilding

Now the logical question is, if qualified inland yards exist and there are no significant roadblocks in their way, why are they not building offshore ships? Probably, the answer is a combination of "the inland yards have not yet realized their own potential in what to them is a new market" and "the ship owners have not yet realized that potential either". However, some inland yards and ship owners do realize the potential, as a few examples will illustrate,

A 207 foot cruise ship is being built for Coastal Cruise Line, Inc. Construction is being carried out at Jeffboat, Inc. and delivery is expected in September of this year (Reference S), The construction of this vessel is significant because it illustrates than an inland yard is tackling a type of craft considered "sophisticated" in the area of outfitting, Indeed, great attention is being paid to the outfitting of the public rooms and the 51 staterooms (Reference 7), Included in the design are lightwoods, such as maple and ash, as well as various fabrics and careful consideration of colors.

CONDITION	T fwd	T aft	T lcf	T even keel*
I	7.22'	10.08'	8.0'	8.91'
II	5.48'	13.42'	9.2'	10.13'
III	7.15'	12.44'	9.63'	10.27'

* BALLAST REQUIRED

TABLE 3
COASTWISE BULKER/TANKER
FLOAT OUT DRAFTS

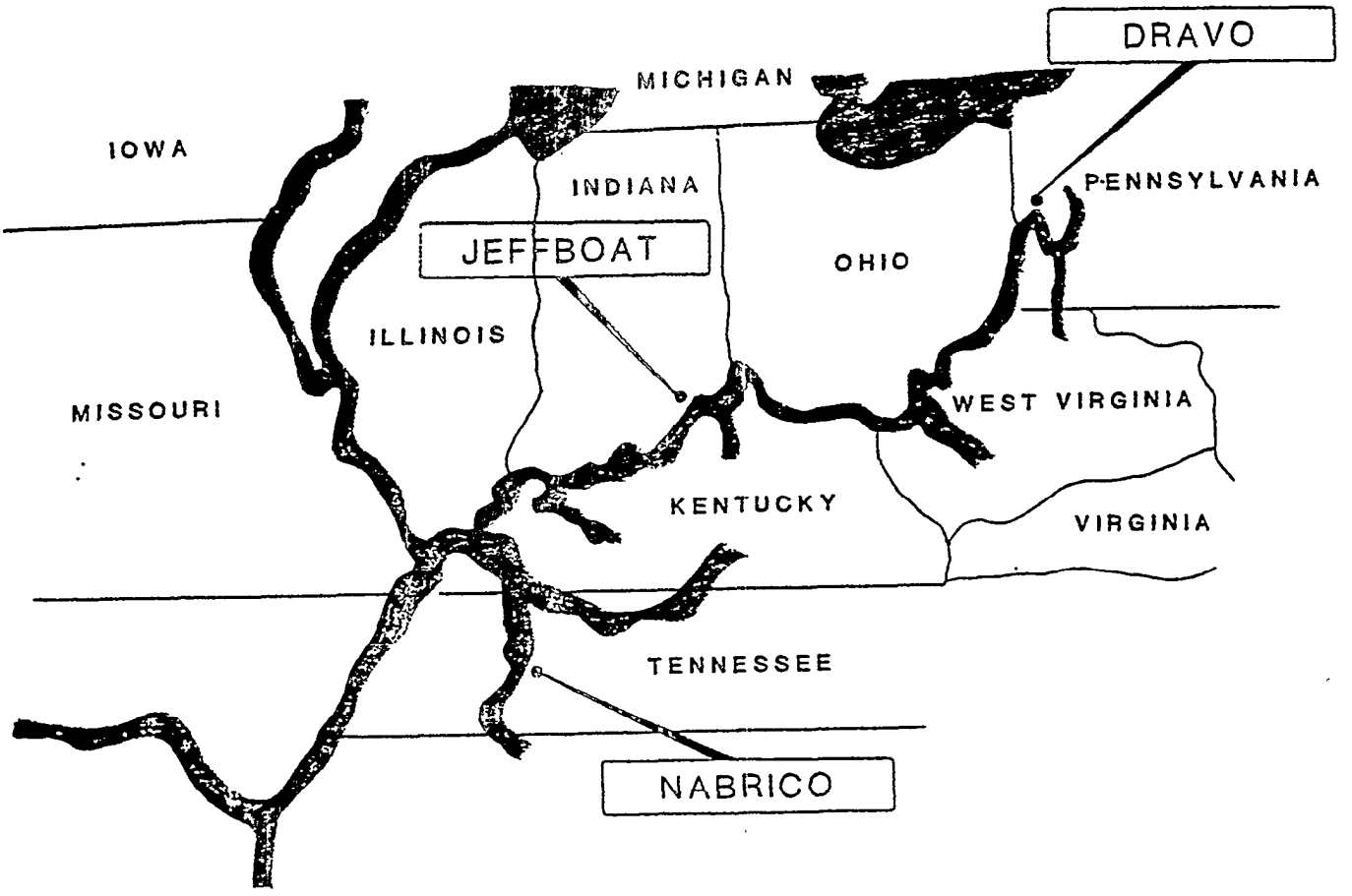

FIGURE 9
SAMPLE INLAND YARD LOCATIONS

INLAND WATERWAY GUARANTEED WATER DEPTH =9'

SAMPLE YARD	SMALLEST LOCK	WATER DEPTH YARD	WATER DEPTH CHANNEL	MIN. OVERHEAD CLEARANCE*	MAX. EXISTING WAY LGTH.
DRAVO	600'x110'	18'	10'	56.2'	600'
JEFFBOAT	1200'x110'	23'	12'	70'	650'
NABRICO	800'x110'	16'	16'	57'	350'

* THESE ARE GIVEN FOR WATER DEPTH OF 9'

TABLE 4
SAMPLE INLAND YARD
DIMINSIONAL CONSTRAINTS

A second example is the construction of five T-5 tankers at a total cost of $300 million for charter to the Military Sealift Command. The ships are to be partially constructed at an inland shipyard, NABRICO. NABRICO wi 11 construct midship sections for the tankers at its yard in Nashville, Tennessee. These sections will be towed as floating units to Tampa, Florida, where they will be assembled with bow and stern sections by Tampa Ship (Reference 8).

A final example is a proposed cruise ship. This vessel is illustrated in Figure 10 and her principal characteristics are given in Table 5 (Reference . A number of shipyards, including inland yards, have expressed interest in constructing this vessel.

These examples show that there is already at least a small trend toward inland yards constructing offshore ships.

COMPARING INLAND AND COASTAL YARDS - CONSTRUCTION COSTS

This section offers two situations in which inland and coastal yard costs are compared. The first comparison is shown in Table 6, which presents construction cost estimates by a number of yards for vessels similar to the coastwise bulker/tanker described earlier. Actual yard names are not given in order to preserve costing confidentiality, The second comparison is shown in Table 7, which presents budget costs estimated by various yards for the cruise liner described earlier. Again, actual yard names are not given in order to maintain confidentiality. Also, note that there is not a one-to-one correspondence between the yards of Tables 6 and 7. Both comparisons are made between large traditional coastal yards which construct naval and commercial offshore tonnage and category A inland yards only. Small coastal shipyards have been left out of the comparison. Finally, in Table 6 a single Japanese yard estimate is presented for international comparative purposes.

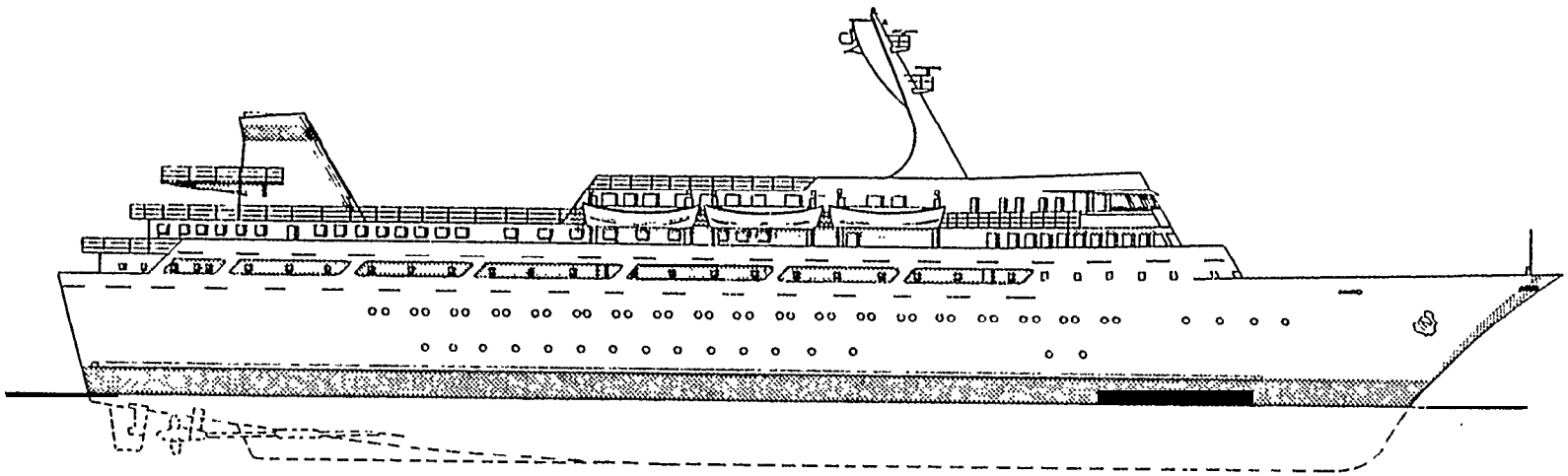

FIGURE 10
CRUISE SHIP

Loa	365′
Lbp	315′
B	65′
D	50′
T	15′
T float out	11′
$\triangle$fl	5200 LT

TABLE 5
CRUISE SHIP PRINCIPAL DIMENSIONS

TABLE 6

CONSTRUCTION COST ESTIMATES
COASTWISE BULKER/TANKER
- AUGUST 1983 -

COASTAL YARDS

	COST ($M)	DWT	COST/DWT
A	60.0	30,000	$2000/L.T.
B	69 .0	33,900	$2035/L.T.
C	72.8	37,500	$1941/L.T.

INLAND YARD

	COST ($M)	DWT	COST/DWT
A	58.5	45,000	$1300/L.T.

JAPANESE SHIPYARD

	COST ($M)	DWT	COST/DWT
A	27.6	45,000	$613/L.T.

TABLE 7

CONSTRUCTION COST ESTIMATES
365' CRUISE SHIP
- AUGUST 1983 -

COASTAL YARDS

A	$ 53.4 M
B	100.0
C	84.2
D	87.5
E	98.5
F	69 0
G	55.4
H	83.7
I	84.8

INLAND YARD

A	43.5

CONCLUSION

There are those who will conclude that the comparisons in Tables 6 and 7 only indicate that the inland yards do not know what they are doing. While it is probable that an inland yard expanding into a new market may underestimate initial projects, certainly the magnitude of difference cannot be overlooked.

This paper is obviously a brief look at the subject. We hope that we have provided sufficient base information to stimulate some interest in pursuing the premise further.

REFERENCES

1. "Shipbuilding and Repair Facilities of the United States", Department of Defense and the Department of Transportation, Office of the Coordinator for Ship Repair and Conversion, Naval Sea Systems Command, Washington, D.C. 20362, November 1981.
2. Gertler, Morton and Kohl, Robert E., "Resistance, Propulsion and Maneuverability Characteristics of MARAD Systematic Series for Large, Full-Form Merchant Ships", U.S. Maritime Administration Report by Hydronautics, Inc., Laurel, Maryland, Technical Report 7370-1, November 1974.
3. "Shallow Draft Bulk Carrier Technology Assessment", U.S. Maritime Administration Report by M. Rosenblatt & Son, Inc., Washington, D.C., August 1976.
4. "Shallow Draft Collier Designs PD-267", U.S. Maritime Administration, November 1981.
5. "Proposal for a Coastwise Replacement Bulker/Tanker", Giannotti & Associates, Inc., 1983.
6. "The Work Boat", p. 65, H.L. Peace Publications, Covington, Louisiana, December 1982.
7. 'MV Newport Clipper, Louisville's Newest Thoroughbred,' "The Courier-Journal" and the "Louisville Times" Advertising Department, July 17, 1983.
8. "Maritime Reporter and Engineering News", Marine Activity Reports, Inc., New York, New York, June 1983.
9. "Specification for Cruise Ship, LOA 365 Feet", prepared by Giannotti & Associates, Inc., July 1, 1983.

GETTING THE JOB DONE AT THE SMALLER SHIPYARD

C. Baumgardner
President
Design Models, Inc.
Los Angeles, CA

Mr. Baumgardner holds a Bachelors degree in Mechanical Engineering and a Masters degree in Business Administration, both from the University of 11 linois.

While with McDonnell-Douglas Corporation, he worked as an aerospace engineer, technical assistant on extended assignment in Japan, and as program manager in the Manufacturing and Manufacturing Engineering disciplines.

Within the Modeling Industry, Mr. Baumgardner has held positions as senior model designer, project coordinator, and is currently President and CEO of his own company, Design Models. He has set up and personnally ran major programs in the Marine, Aerospacpe, Petrochemicals and Power Industries.

ABSTRACT

When Bender Shipbuilding of Mobile, Alabama had to design and construct a 133 foot Freezer Trawler in record time, they turned to the Design Model program to simplify, expedite and coordinate the design process and to improve the quality and accuracy of communication in all phases of the program. This effort is compared with the successful T-ARC 7 model at flational Steel and Shipbuilding.

GETTING THE ,JOB DONE AT THE SMALLER SHIPYARD

When I presented my 1983 IREAPS paper on our successful NASSCO T-ARC? E&ineering Design Model, some people were skeptical. There were comments like, Vhis model seems to have saved money, but the modeling effort went on forayearandahslf. Can a Design Model successfully support a tighter schedule?" -or- Vven though the model saved money, it cost nearly $400,000. Can Design Models be built for less than that?[11] -or- "Design Models seem to work in the large shipyards, but can they help in one of the smaller yards?[t]l Bender Shipbuilding & Repair Company, of Mobile, Alabama, would answer all these questions with a resounding, WZSJ[rt]

Provided with a hull design and preliminary machinery arrangements plan by a naval architect, Bender faced an approximate 8 month schedule for designing, constructing, outfitting, testing and selling-off a 133' Factory Stern Trawler. To help meet this seemingly impossible schedule, Bender sought the aid of Design Models, Inc. (Inc) of Los Angeles, California.

Engineering Design Models of the forward and aft machinery spaces, mid-body inner bottom and processing area were planned. A scale of 1 1/2" = l'-0" was chosen, and detail was kept to a minimum. The model was designed to provide maximum functional value at minimum cost. Design of the modeled areas lay on the critical path for completion of the trawler. Therefore, any added, unnecessary model work would delay the delivery.

Bender provided DMI with structural mylar drawings at the model scale. Basic models (tables, frames, decks, bulkheads and equipment), were constructed at DMI's Los Angeles shop and shipped to Mobile by truck. Bender received the completed basic model just l6 days after authorization to proceed - 11 days ahead of schedule, within three days of delivery, DMI model designers had discovered and corrected 12 design problems. At this point, model progress had caught up with and passed both yard construction and Bender paper design. (Prior to model delivery, Bender had started pipe design on systems in the mid-body inner bottom. This section was the first structure to be fabricated.)

To yield maximum benefit, a Design Model Program must be tailored to the specific needs and operating procedures of the company. At Bender, DMI established a simple, yet comprehensive system for controlling and statusing technical problems snd schedule progress of the model. Methods of timely material procurement were worked out. Information flow was improved to help the model design proceed with a minimum of delays.

Yard personnel became familiar with the model early in the program. They liked the speed and ease with which construction-related problems could be resolved at the model. Instant snapshots were taken of the model piping so they could be carried back to the boat. At an early stage of construction, the yard became acutely aware of the complexity and high density of the finished machinery space. They saw that the design worked on the model, and thus developed a high level of confidence in it. On the rare occasions when

they tried to deviate from the design, it quickly became evident that even slight relocation of equipment or piping just did not work!

As DMI firmed up the design, lines were tagged. Taking dimensions from the tags, Bender personnel then made single-line piping drawings which were used for field installation.

For the aft machinery space, 100% of the design was accomplished on the model. David Lick, who is responsible for machinery piping engineering at Bender, is pleased at how efficiently the design of all systems can be integrated using the three-dimensional approach. Optimal design evolves as the requirements of all systems are considered and balanced together. Bends and elbows are minimized. Head and knee knockers are eliminated. Access to valves, equipment and manholes is optimized. Allowances are made for pull spaces and maintenance requirements. Tank suctions are readily located at low points. Physical interferences are eliminated. And the list goes on..... If the piping arrangement fits on the model, it will fit when installed on board the boat.

62 problems were discovered and corrected by the trawler models, and untold others were avoided. Perhaps two of the most significant problems were 1) the possibility of contaminating the process area with fuel oil, and 2) location of the main saltwater suction manifolding. The contamination problem resulted from the need to use mid-body inner bottom fuel oil storage tanks for emergency ballasting. Addition of appropriate blind flanges guarded against accidental contamination. Saltwater manifolding was kept out of the crowded aft machinery space by voiding a section of fuel tank below the tank top. Both problems became highly visible on the model, and easy, cost effective solutions were quickly worked out by three-dimensional design.

Sabroe, a prominent Danish refrigeration manufacturer, supplied the process refrigeration equipment. Their field technician was amazed at how quickly and efficiently DMI designer Steve Gwen used the model to develop the refrigeration piping design and machinery location. This was one of the tightest packaging installations the Sabroe representative had seen, yet the design was completed just one week after receipt of the refrigeration drawings.

Why did Bender trust such an important design task to Design Models? It all started 7 months earlier at the l982 IHEWS Technical Symposium when David Dick heard my NASSCG, T-ARC7 paper. He asked for, and was given, a personal tour of the model and ship under construction at NASSCG. Mr. Lick was impressed with the many advantages of designing in three-dimensions and felt Bender would greatly benefit by using this design approach.

Back at Bender, Mr. Lick used a posterboard model to help solve a tricky ventilation problem. I visited the shipyard to present my IHEAPS paper, and Bender management expressed interest in the potential benefits of Design Modeling. When Bender was awarded the contract for a harbor tour boat, they went out for bids on a Design Model. Management was not prepared for the cost and decided to try a model with in-house personnel. Although no one at Bender had any previous modeling experience, enough benefit was derived from the model to encourage future use. Then the 133' Factory Stern Trawler came along. A Design Model Program was determined to be the best

approach, given the tight schedule requirements. The team of three DMI model designers completed machinery space design in just 8 weeks.

Now let's look at some facts and figures that Bender has provided regarding this Design Modeling effort. Machinery space design is finished and piping installation is about 45% complete. Bender Shipbuilding has quantified some of the benefits derived from three-dimensional designing by comparing 133' Trawler data with figures from a previously constructed 192' Anchor Handling Tug of similar compexity.

YARD PIPE REWORK SAVINGS
Using a ratio of piping rework hours to total piping hours budgeted, the comparison is as follows:

		192' TUG	133' TRAWLER
$\frac{\text{Rework Hours}}{\text{Budget Hours}}$	=	9.6%	1.8%

Yard pipe rework at Bender was almost 5 l/2 times higher when using composite drawings than when using the Model.

NOTE: Bender attributes a majority of the Trawler rework to paper pipe design errors and to field crafts errors.

ENGINEERING DESIGN SAVINGS
A reduction in engineering piping design costs is shown by comparing engineering pipe design labor with production pipe installation labor.

		192' TUG	133' TFUNLER
$\frac{\text{Pipe Design Labor}}{\text{Production Pipe Labor}}$	=	36%	27%

When using paper design, pipe design hours per production manhour was 33% higher than when using the model.

NOTE: Production manhours on the Trawler were lower because of such things as reduced rework, fewer fittings and cleaner design. Thus, the Trawler ratio above presents a conservative evaluation of the model's impact.

ENGINEERING DRAWING REVISION SAVINGS
Piping dral&ng revisions on the Tug ran 37% higher than the level being experienced on the Trawler. This results in savings of engineering labor as well as blueprint reproduction and distribution cost. (The engineering revision savings are reflected in the Engineering Design Savings discussed above. ")

ESTIMATED MATERIAL COST SAVINGS
Material is saved with the model by optimizing piping runs (fewer fittings, more direct pipe runs, etc.) Bender estimates that 10% - 20% more material

is required when composites are used.

MATERIAL SURPLUS AND RETURN-TO-VENDOR MATERIALS SAVINGS
The model allows earlier identification of materials and more accurate material take-off of long lead-time materials. This greatly reduces material surplus and return-to-vendor materials. The Tug surplus and returns were 4 times the surplus and returns being experienced on the Trawler.

DESIGN ERROR ELIMINATION SAVINGS
Assuming the model is accurately constructed, three-dimensional designing eliminates physical interferences. The number of interference errors avoided by use of the model will never be known. 62 significant design problems were detected and corrected by the model, however. If we assume these problems would not have been discovered until yard installation, the estimated impact of these errors can be costed out. Bender estimates that the hours required to correct these 62 errors would have been 4.8% of the total project tiours.

YARD INSTALLATION LEAD TIME REDUCTION
Using a Design Model at Bender Shipyard, lead time from start of piping flow diagrams and structural drawings to start of installation, averages approximately 50 days. Using composite drawings this lead time averages approximately 80 days. That's 60% longer when using paper design methods.

The aid to visualization provided by the model and the design's three-dimensional presentation have brought many added benefits to Bender shipbuilding. David Lick likes the firm project control he has with the model. Increased teamwork is evidenced by improved cooperation and better communications throughout the entire organization. Everyone, from management to the field crafts, has a far better understanding of the project scope and its complexities. There is a much higher level of confidence as the design evolves, knowing that the arrangement will physically work when it is installed on board the boat. There is more employee pride and motivation with less frustration.

The model's contributions have equalled, and in most cases exceeded the expectations of everyone at Bender Shipbuilding. They are convinced that they have chosen the proper design approach. As a refinement, Pir. Lick is looking into combining Model Design with Computer Aided Drafting/Computer Aided Manufacturing. The Engirreering Design Model has proven to be a cost effective method of improving Bender's design and construction process. Adding CAD/CAM should bring further benefits.

I'd like for David Lick of Dender to come up front to help answer your questions, and while he is making his way up here, I'll show some additional slides of the Trawler under construction in the yard.

IMPLEMENTATION AND IMPACT OF WORK STATIONIZATION IN SHIP CONSTRUCTION OUTFITTING

Michael R. Yriondo
Director, Special Projects
Designers & Planners, Inc.
Arlington, VA

Mr. Michael R. Yriondo is presently employed at Designers 8 Planners, Inc. as Director, Special Projects where he is responsible for production engineering and producibility. His shipbuilding and ship design experience includes responsible management positions in program management, engineering; production planning and control, finance, quality assurance, and ship construction, overhaul and repair.

Mr. Yriondo joined the Electric Boat Division of General Dynamics in 1961 in the production department and progressed to senior cost engineer. He joined Ingalls Shipbuilding Division in 1969 and held the positions of Manager, Production Control, and Group Mamager, Production Planning and Control and was instrumental in the successful implementation of the work stationization concept at Ingalls. As Program Director for R.E. Derecktor Shipyards, he was responsible for all aspects of the design and construction of nine 270' medium endurance cutters for the USCG until joining Designers & Planners in 1982.

ABSTRACT

The potential for substantial improvement in productivity no longer lies entirely in the application of high technology machines and material. The high technology approach to reductions in manhours has reached a point of significant diminishing returns. It ordinarily requires large capital expenditures which must be recovered over an increasingly longer period of time, due primarily to inflation and the cost of money.

Shipyards typically bid multiple ship contracts by establishing the estimated cost of the first unit based on previous (Historical) performance. A logarithmic improvement curve is then applied to predict follow unit costs (also based on historical experience). Performance is then measured against goals which are established based on the bid.

This paper is intended to demonstrate that the implementation of innovative management systems and techniques which properly use the human resource can provide productivity improvements far exceeding those currently being contemplated or achieved through emphasizing high technology equipment and materials.

The thrust of this paper is to demonstrate that investment in managers and management systems can provide substantial economic improvements not directly coupled to the acquisition of high technology equipment and materials.

IMPLEMENTATION AND IMPACT OF WORK STATIONIZATION IN SHIP CONSTRUCTION OUTFITTING

In late 1967, Litton Industries made a decision to construct a large, modern shipyard on the Pascagoula River opposite their existing Ingalls shipbuilding facility in Pascagoula, lilississippi. The concept of this new yard was:

- o Efficient multi-series production of large ships
- 0 A logical, orderly material flow
- o A facility arrangement that maximized production line techniques including:
  - Pfodular Construction
  - Maximized We-outfitting
  - Assembly Line Concept

A team of people experienced in ship production and facilities engineering visited modern shipyards in Europe and Asia and produced a facility design that incorporated important features of these shipyards.

Construction of the new yard commenced in 1968 and was essentially completed in mid 1970, consistent with the contract award to Litton for the 30 ship DD 963 destroyer program and the 9 ship LHA 1 program (which was later reduced to 5 ships).

Employment at the new facility went from 200 in August 1969 to 18,000 in late 1974. This was in addition to some 6,000 personnel employed at the East Bank shipyard.

By now the start-up problem was over, the shipyard employment over 24,000, and Ingalls had a lot going for it. It had:

- 0 All new equipment

- State of the art numerically controlled steel cutting
- Large and sophisticated management staff
- Over 700 acres of usable space
- largest computer center in the Southeast
- Excellent material availability
- Tremendous heavy lift capability

"Why didn't this large, fully staffed, sophisticated facility perform any better than 30 year 'old shipyards?"

The answer, of course, was that resources, including material, facilities and personnel, were not being effectively managed. It was next to impossible on any ship to get an accurate "snapshot" at any time of the status of work in progress. There was, simply put, no accountability, and therefore, confusion on a large scale.

In 1975, a policy called "work stationization" was formulated and the implementation plan determined.

In order to implement this policy, a concerted team effort was made to assess the problems requiring resolution in order to successfully "stationize" the production effort.

The following items depict some of the problems which had to be recognized and subsequently solved or accommodated:

- Absentee rate of 7+%
- Attrition rate of 4.8% per month

- Average educational level of line supervisors was 9th grade
- Average educational level of craftsmen was 6th grade
- No specific accountability at pre-determined points in time
- Span times of work authorizations crossed time boundaries of multi-work stations
- Pre-kitting of material not being done
- A lot of travelers between the work site and warehouses, in process storage areas and shops
- Lack of control of assignment of personnel to perform work on a repetitive basis
- Inadequate control of material, both purchased and fabricated

The decision was made to establish DD 963 Class hull 13 as the first "stationized" ship. The 4th through 12th ships were too far advanced in construction to stationize, so the decision was made to finish them to the existing method.

The following measures were implemented in order to execute the "staionization" policy:

- A general ship superintendent was assigned as the responsible person on each ship (including hulls 4 through 12). These individuals were selected from all areas of the company, regardless of their apparent value in their current job. The president of the shipyard interviewed and approved each selection.
- Support peronnel, including production control, engineering, quality assurance, material support and program management were physically located aboard each ship.
- Storerooms for standard stock were placed aboard the ship.

- All work authorizations were re-scheduled/rescoped in order that each job could be accomplished in a pre-determined window of time.
- Craft personnel were assigned (by name) to a specific work station, and could not be reassigned without the approval of the Vice President of Operations.
- Travel by the craftsmen and craft supervision was eliminated.
- Fabricated material for a work station (pipe details, foundations, ventilation duct, etc.) were scheduled to be 100% completed no later than two weeks prior to the work station supported.
- Fabricated material was kitted on pallets, by work authorization.
- Each work authorization was assigned to a specific supervisor and he was 100% accountable for performance of that work. The computerized statusing system tracked performance by work authorization and by supervisor.
- A foreman, or general foreman was assigned to each work station and was considered responsible for overall performance of his craft. He reported functionally to the general ship superintendent and only administratfvely to the craft superintendent.
- A "Warroom" was established aboard each ship. Each craft supervisor was required to status weekly (in writing) each of his work authorizations. This status included:
  - Manhours expended
  - % complete

- Statement as to whether the scheduled completion was still valid.

In addition, any problems with material, drawings or work authorizations were submitted to his production control planner (who was located in the Warroom).

- o The general superintendents of the individual crafts were not responsible for the work in the work station, but instead were responsible to provide each of the work stations with the required resources (manpower and tools) to perform their work.
- o A weekly meeting was held by the shipyard president where each general ship superintendent reported status and problems. The craft general superintendents, engineering, production planning and control, quality assurance, and material management also attended and reported on problems and their resolution.
- o At each work station change, a detailed accounting of work not completed was performed and quantified in % complete and man-hours to go.

The results of the change in policy were almost immediately realized. Hull 13, the first stationized ship, was delivered before hull 9 through 12.

An improvement of 5% from ship to ship was consistently attained, with a few ships improving by up to 10%.

At hull 17, the Vice President of Operations decided that in addition to the policy of a minimum 5% improvement from one ship to another, the schedule

would be reduced, starting with a reduction of one week in the last two of four twelve-week work stations post-launch. By hull 25 we had reduced the construction time by twelve weeks post-launch and eight weeks pre-launch.

The net result of these measures was:

- o A 5% minimum manhour improvement from one hull ***to*** the next.
- o A progressive contraction of the construction schedule.
- o Delivery of a DD 963 Class destroyer every six weeks with an LHA 1 Class ship delivered approximately every eight months.

The points just described that deserve stressing are as follows:

- o The concept of the craft management was shifted. The conventional method of managing production from an office was transferred to a specific individual aboard the ship.
- o The work authorizations were rescoped and written in such a way that 100% of the work authorization could be physically and completely accomplished within the time parameters of the work station.
- 0 The "\?arroom" concept allowed an accurate in-process status on a weekly basis on the work site. The "Warroom" status was collected once a month by the Industrial Engineering Department and input into the computerized physical progressing system which generated a "real time" monthly status of the exact status of the ship.

- The manning was assigned and committed to the work station by name. It takes years to develop and train a naster pipefitter - but it is relatively simple to teach a person to install the same 100 feet of firemain pipe 30 times.
- The incomplete work could be accurately quantified at relatively short intervals. This allowed accurate scheduling of the incomplete work into the early stages of the next work station. It also allowed that the proper budget to complete this work was provided to the management of the next work station, thus precluding penalizing the receiving craft supervisor/foreman for work not accomplished prior to his watch.
- Most important - the president of the shipyard established the policy and personally involved himself in its execution.

The "stationization" concept was not installed for free. The support manpower in production control, engineering, quality assurance, material support, ship's management and program management was required to be increased by 20% to 50% depending on the function. The benefits obtained were substantially more than the cost of this increase in non-production functions. All excuses for failure to perform were eliminated. The craft supervisors no longer had to perform substantial paperwork, nor did they have any reason to leave the ship. In excess of 95% of their time was available to supervise and teach their crew. Their material was handed to them with minimum shortages. The field engineer was immediately available to resolve design problems. There was no wait for inspectors.

A definite benefit was a tremendous boost in morale combined with a general feeling of teamwork and pride in a job well done.

The conclusions I have reached based on my personal involvement in stationizing this shipyard are:

- The biggest payback available relative to productivity is through improvements in managing the resources available.
- Productivity improvements available through the application of technology methods and materials should not take precedence over improved management systems, but should be implemented in consonance. They actually play well together.
- A predetermined historical improvement curve should not be simply accepted by management. Constant improvement should be expected and can be attained.
- Proper application of non-production and support personnel can attain large paybacks in productivity of the production force.

IMPACT OF TECHNOLOGICAL CHANGE ON SHIPBUILDING PRODUCTIVITY

Ernest G. Frankel
Massachusetts Institute of Technology
Cambridge, MA

It

The World Bank
New York, New York

Professor Frankel's areas of expertise are naval ship design and procurement, program management, shipbuilding and shipping management, maritime policy, manpower planning and control, cost control and analysis, ship specifications, strategic planning, and management information systems.

ABSTRACT

Technological change has resulted in major productivity gains in some ship-building countries, while others such as the U.S. have lagged behind, although a large proportion of these technological changes originated in the 1J.S. In this paper, we evaluate the gains from the factors which play a role in assuring significant productivity gains from technological changes in ship-building production processes, and evaluate the effect of industry participation in research and development of process and product technology, and the timing of application of new process technology, and the influence of worker incentives and training on the attainment of significant productivity gains through technological change.

Introduction

The relationship between technological change in production processes and productivity has become an issue of increasing importance. While technological change is credited with major productivity improvements in some industries, it has not resulted in similar improvements in other industries. The example of interest here is the U.S. shipbuilding industry, which has undergone major technological changes since World War II and has led world shipbuilding in the development and adoption of many new technological processes. Yet there are indications that the U.S., shipbuilding industry has not been able to advance its productivity significantly since then. There is a question of how technological change affects productivity and what other factors are important to assure productivity growth in response to or in line with technological change.

Although the U.S. shipbuilding industry led the technological evolution of shipbuilding by developing effective methods for all-welded ship construction and for'mass in-line production of ships during World War II, which made it by far the largest and most efficient builder of ships in the world then, it has since fallen far behind other major shipbuilding nations in productivity and output. This happened notwithstanding continued process and product innovation in the U.S. since then. Other shipbuilding nations have apparently been.able to capitalize to a much larger extent from technological changes.

The subject of this paper is to investigate the reasons for this difference in productivity gains resulting from technological change in?lshipbuilding andidentify factors which would improve shipbuilding productivity and competitiveness.

Impact of Technological Change

The impact of technological change on shipbuilding productivity can be pervasive if effectively timed, managed and applied. On the other hand, technological change may cause no more than a ripple if ill-timed, badly managed or ineffectively applied. Technological change must be well planned and is today among the major strategic options and opportunities for shipbuilding. Technological change can be achieved by transfer or purchase of new product or process technology, adoption of spin off of new technology, or in-house (or domestic) development of product or process technology through research and development. In many countries detailed strategic plans are developed to guide decisions on timing, development, transfer and adoption of technological change. Such planning usually involves economic analysis of the advantages of alternative methods of technology acquisition. It includes trade-offs of probability of success in research and development aimed at technological change in terms of acquiring new technology in a timely fashion at a competitive cost as well as the probability of advancing technology beyond the development achieved by competitors or elsewhere.

It is interesting to note, that some of the most advanced shipbuilding countries in the world are purchasing significant process and product technology while concentrating in their in-house or domestic technology development on very narrow or specific technological issues. This choice is often based on the discovery of technological voids. An example is the in-house development of ship assembly transfer, handling and manipulating technology or automated pipe fabrication technology by shipyards which procured N/C cutting and automated welding technology. The reason for this tactic is the recognition that adoption of new process technology requires development of new interface technology which permits effective use of the new process technology.

U.S. shipbuilding research and development, on the other hand, is often involved in duplicating technological changes or advances made elsewhere with little evaluation of the trade-offs between domestic technology development and transfer or procurement of technological advances from elsewhere from the point of view of

a) Economic and financial cost,
b) timing of technological change, and
c) competitive aspects.

Another issue is the discovery of technological innovations in other often unrelated industries with potential applications to shipbuilding.

Here again, other sectors 'of the economy appear to be more alert to such technological transfers and devote more substantial resources to the discovery of such opportunities and applied research into technology transfer.

A most important issue is that technology change must not just happen, and in particular only happen in response to competitive or market pressures, but must be planned. The most successful shipyards have always considered technological change a strategic issue which requires medium to long-term planning and the setting of tactics towards accomplishment of a strategic goal of technological change.

The Role of Technological Change

There are several determinants of technological change. Technological change affects processes and products. It is the advance of technology, which may consist of new methods for producing existing products, new product designs to permit improved production of existing products, new products with important new characteristics, as well as new approaches to management, control, organization and marketing which constitute or involve technological improvements or change.

Technological changes constitute advances in knowledge, not just introduction of new techniques. They may involve new scientific principles discovered through scientific research, or otherwise, but technological change involves use and the improvement of process and/or product, not only discovery of new knowledge.

Changes in technology may be connected with scientific discoveries or technological innovations but they usually do not follow these in a simple direct manner. In fact the scientific discoveries may lay dormant or are applied in completely unrelated fields before they are applied to suport a change in a particular technology.

Technological change today is more closely related to scientific discoveries than ever before. While during the industrial revolution technological change was primarily connected to and the result of technological innovation, it is today more and more dependent on scientific advance. The reason is largely found in the rate of scientific discovery and the speed by which such discoveries are brought into product and process use.

Technological change also permits introduction of completely new products. Such new products may result in important technological changes for many other products and various services. A good example is the use of computers in manufacturing and processing industries such as with chemical, refining industry on one hand and in the development of new computer controlled engines, appliances and other devices, where the new product includes a computer as an integral part. The

rate of development and use of technological change including technology transfer is affected by the economic or profit advantage over older products or processes, the risk involved in adopting the technology change, the amount of resources required for its development and the associated uncertainties in resource commitments, and finally the risk that the technology change will perform as expected.

Factors causing technological change are often difficult to determine. It is generally assumed that the introduction of technological change is influenced by profit potentials and therefore the rate of expenditure for factors causing technological change. There are similarly supply factors which influence the cost of making particular kinds of technological change. Gillifau; for example, showed that technological change in the pre-World War II period was largely the result of gradual evolution. This has changed since then and technological change in the shipbuilding industry is now mainly affected by technology transfer and scientific advance through research. The industry now devotes appreciable resources to improve its own technology. In parallel other industries which supply capital goods and other inputs for shipbuilding are similarly introducing an increasing number of technological changes which in turn affect technological change in the shipbuilding industry.

Furthermore, there are many 'spillovers' of technological change from supplier and other industries into shipbuilding. Other factors influencing the rate of technological change are the market structure and the legal and regulatory environment of the shipbuilding industry

Eorms of Technological Change

Technological change can occur in a process or a product. When there is a technological change in the product, then the process used in its development may be subjected to technological change as well. For example, introduction of all welded ships caused a major technological change in shipbuilding affecting ship fabricati'on and ship erection Processes.

Tec~ological changes may affect capital and labor inputs in different proportions and are therefore often defined as capital

or labor saving technological changes. This obviously applies . mainly to technological changes in processes, in which performance is mainly measured in terms of user labor and capital inputs. Technological change in products though may provide a change in product performance which bears *no* relationship to the output or performance of other products in terms of inputs. This may be caused because the output *or* performance is radically different from that of any other product or because the product is designed to be used differently.

The Effect of Technology Change on Productivity

As mentioned, one of the factors inducing or encouraging technological change is the desire for productivity growth, usually measured in terms of growth output as a function of inputs. The potential for productivity growth may also.further technological change by technological diffusion or technology transfer. Where technological change affects the product or its ,performance, market factors, including competition, may provide the driving force. Productivity growth is then measured in terms of product performance growth. Product, such as ship performance, growth is more difficult to measure than the growth of productivity in manufacturing or building of the ship, because the ship is designed to perform a service, and service performance improvements are not directly related to the inputs used, as noted by Fuchs and Wilburn.

Another issue which is of particular concern in the shipbuilding industry is the difference in productivity growth among different shipyards benefiting from an identical or similar technology change. Here we often find that different management approaches, labor conditions, work rules, or the coexistence of old and new technology affect productivity growth. Such interplant differences in productivity or productivity growth are particularly prevalent in shipyards building the same ships and using the same technology.

The application of a new technology in shipbuilding and its use may also be affected by the often highly fluctuating prices of the inputs and outputs, as well as market conditions, which may discourage productivity growth and encourage continued use of

often obsolete technology, particularly when the old technology is depreciated or has a low financial cost and other inputs must be utilized, however inefficiently.

To evaluate productivity and productivity growth, economists have tried to devise various measures. The total productivity index which relates changes in output to changes in inputs, is one of these measures, but it is often found to be an insufficient measure in the determination of the effect of productivity growth as a function of technological change, because productivity growth may be affected more by better methods, organization and management, than by technological change. These are often closely linked or interdependent.

We also have a problem in measuring the rate of technological change and the magnitude of the change. As mentioned by Mansfield , "Measures of the rate of technological change are indirect measures that look only at the effects of technological change, and since they equate the effects of technological change with whatever increase in output is unexplained by other factors, they do not isolate the effects of technological change alone." We also experience difficulties in isolating and measuring inputs.

Productivity Growth

The important question is if the increase in the rate of technological change in the shipbuilding industry since World War II, has caused a comparable increase in the rate of productivity growth in shipbuilding. Productivity growth *is* affected by many other factors apart from technological change, and one of the difficulties will be to separate the impacts of the different factors influencing shipbuilding productivity. These include social, economic, environmental, and other factors, all of which similarly underwent major changes in the last four decades.

Measuring Productivity

Traditional measures of productivity compare the quantity of output with the corresponding quantity of one or other of the inputs such as number of finished goods per man-hour of labor or machine-hour of production equipment. Such a measure of productivity is called the "physical partial productivity."

Because different mixes of labor and machine hours can provide the same output, this measure is usually applied for a single input such as labor hours at a given level of other inputs, where other inputs are usually set at an "efficient" level of utilization. To provide more insight into the analysis of productivity a second measure often called the "value partial productivity" may be used in which we compare the value of output with the value of the different inputs of interest. The value of output here can be real value in terms of sales price, or value added of output which is the gross value of output minus the value of all inputs of interest. One can also use a mixed productivity measure where the value, or value added of production is compared with inputs such as labor or machine hours. World, national, and other aggregate productivity data is usually computed using such mixed productivity measures.

As productivity at different levels of output depends often on the mix of inputs used and different ratios of inputs can usually obtain the same output, and because the use of different inputs may be nonlinearly dependent in both a physical and value sense, multifactor productivity measures are required which include all or at least most important inputs in the productivity measure. As suggested by Parker two different multifactor productivity measures can be defined. Total factor productivity is the ratio of the real value added of outputs to the real value of all the inputs. 'Total Productivity' on the other hand is the ratio of the real value of output to the real value of all the inputs.

There are many problems in applyiig multifactor productivity measures to shipbuilding. For example, measuring capital inputs such as the value of machinery used, requires the accurate allocation of machine time among different products or ships in whose construction a machine was used. Another problem is that shipyards produce custom or small batch outputs which although tangible cannot always be readily compared.

Another issue is the definition of output. In shipbuilding outputs are not only diverse but the value and performance of individual ships may vary widely with market conditions, clients'

use of a ship and more. Finally, none of the productivity measures permits introduction of inputs such as management, organization, product regulation, quality requirements,and more which differ widely among shipyards, nations and clients. Productivity measures as used today also do not indicate the trade-off among different mixes of input or allow determination of the best use or allocation of inputs to achieve the most efficient productivity or the productivity which makes the best use of inputs. The main problem though remains that most of the data used or available for production measurement is usually subjective. This is particularly so in the case of shipbuilding inputs.

Product Innovation

Product innovation calls for a good understanding of the performance, service, use, legal, social, operational, economic, political, financial and competitive aspects of the product. With the firm, product innovation is therefore of concern to many in the organization. In shipbuilding product innovation is usually introduced on the whole or at least in part by the user of the product and not the manufacturer or firm. This is largely due to the fact that shipbuilding is still a custom or small batch manufacturing process catering to the specific demands of individual shipowners, who operate in a highly competitive environment and specify ships to meet their own requirements. Only very large mass production yards, like those in Japan, Korea and Sweden or yards under one ownership like British Shipbuilders (British Government) design their own "standard" ships. Others and in particular U.S. shipbuilders build to designs developed by the owner or by a naval architect for the owner. Even where the shipyard offers standard designs, owners will often introduce custom features, which make the ship or product distinct.

Most of the recent technological changes in ship design were not devqeloped by shipyards but by owners (or users) or naval architects on their own behalf or that of an owner, Containerships, Roll-On Roll-Off Vessels, Mammoth Tankers, Barge Carrying Ships and more were all developed by users. Even

liquefied or pressurized gas carrying ships were developed by users or their engineers long before some shipyards developed their own standard designs.

Role of Shipbuilding

The shipbuilding industry is unique in many ways. It is a 'global' industry as opposed to an 'international' industry in that it competes on a worldwide scale instead of on a market by market basis. Shipbuilding companies must consider the whole world as a single market, hindered by few trade barriers. Barriers, where they exit, are more in the form of government or other types of aid to competitors than outright protectionism. This is largely due to the fact that shipping is among a few remaining industries operating under free trade concepts, which among other factors permits the ready transfer of ships and related assets from country to country. In fact, ownership, registration, financing, and operation of shipping may be dispersed among many nationalities.

The shipbuilding industry market is not only dispersed, but is also dynamic in terms of technology, size, diffusion, and structure. Clients vary from single ship owner operators, large individual multi ship owners, ship leasing companies, liner operators, resource companies to governments and multinational corporations. The market has historically fluctuated widely. Major market cycles may account for demand variations of 80% or more. On the supply side, we find similarly large variations by reason of the large differences in scale of plant size in shipbuilding. Although there are well over 1,800 shipyards worldwide constructing oceangoingvessels, 92 yards or about 5% of the number of shipyards account for well over 91% of the world shipbuilding capacity, with some individual yards providing as much as 2.8% of world shipbuilding capacity. As a result, introduction of just a few yards can alter supply capacity appreciably. In recent years, shipbuilding has evolved from a labor intensive manufacturing to a capital-intensive assembly industry. As a result, there is now increasing demand for effective design production integration. Because of the small number of product (ship) types and units of output from any individual plant, economies of scale in ship production are more difficult to rationalize. In the past, the size of a shipyard

was largely affected by the type and size of ships offered by the yard. More recently though overall capacity versus custom production has become a more relevant measure for scale comparison of plants, as large and small yards increasingly cater to the same market segments.

An important factor in shipbuilding is the cost of construction or production financing. The holding costs of in-process material may differ by as much as 33% of final delivered cost of identical ships among yards with equal labor productivity, labor and material costs, if the time of construction by two yards differs by a factor of 3-4. For example, a yard requiring 18-24 months to deliver a ship may have a 33% cost disadvantage compared to the costs of a similar yard capable of delivering the same ship in say 6 months from the date of keel laying. Recognition of the importance of the in-process or holding costs has resulted in technological and management changes designed to accelerate the production process often in preference to changes aimed primarily at improving labor productivity. As a fall-out such an approach may also produce a large improvement in resource and facility utilization, facility use balance and shipyard capacity.

As assembly plants, shipyards depend heavily on other industries such as steel, machinery, electronics and more. The value of material equipment and component supplies used in shipbuilding varies from 38-73% (with an average value of 55%) of the value of the completed ships produced; This requires close supplier-shipbuilder coordination and strict control of orders, deliveries, and inventories.

Ship purchase financing is among the most complex product acquisition processes, and usually involves international and governmental financing. The structure, technique and innovation of financing offered usually plays a major role in the marketing of shipbuilding. This is particularly important because of the comparatively small percentage of value added and large investment capital sunk in modern assembly type shipbuilding. Financing is used as an important marketing tool by the shipbuilding industry.

Shipbuilding is subject to many national and international regulations relating to quality and method of ship construction. This is usually achieved by adherence to defined international standards.

The increasing capital intensity of shipbuilding, rapid change of ship technology with the consequent acceleration of ship obsolescence, as well as the volatility of the demand for ships has forced shipbuilding management to use increasingly more advanced and scientific business management as well as automated production techniques. As shipyards vary in their approach towards management and technological change, they differ today more than at any time. There are fully automated as well as traditional shipyards. While some yards maintain ultimate production flexibility, others try to achieve optimal balanced specialization. Specialization versus diversification, multi versus single plant operations, plant size, technological balance and management approach are all issues occupying world shipbuilding. The research proposed here is an investigation of the effect of technological and market change on world shipbuilding productivity, supply, specialization, and plant size.

Overview of the Shipbuilding Industry

World shipbuilding is a cyclical industry with fluctuating demand not found in any other industry. It experienced over nine serious demand cycles with more than 40% reduction in demand since 1896, with three since World War II alone.

From 1930 to 1933 for example we saw a decline of 84% in shipbuilding output from 2.889 million GRT to 0.489 million GRT. Again at the end of World War II between 1944 and 1947 a decline of 85% from 13.88 million GRT to 2.093 million GRT was experienced. More recently we experienced a worldwide decline of 60% from 35.897 million GRT in 1975 to less than 14.9 million GRT in 1979. In addition we have had many smaller fluctuations of lo-20% which have become quite cyclical with an intercycle period of 7-10 years.

Shipbuilding in most countries is not only an international but a global industry which competes for each order on a world

and not market-by-market basis. From a shipbuilder's perspective the whole world is viewed as a single market, and therefore the world economic condition has a much greater influence on the industry than on other industries which sell to regional or individual national markets.

The shipbuilding industry is an assembly industry which is both capital and labor intensive. This is no longer a conflicting requirement. As an assembly industry, shipbuilding has major and significant linkages to many other industries, such as iron and steel, machinery, electrical and electronic industries. Its assembly process can be expanded to include component and even machinery manufacture, or contracted to include only ship assembly processes. As a result integrated shipbuilders with close relations to linkage industries can - often more effectively weather large cyclical fluctuations than shipbuilders who are basically independent of and lack integration with their major supplier industries.

Investment in shipbuilding equipment on a per capita basis has mushroomed in recent years as many shipbuilders are gearing up for the revival of the industry by the introduction of more automation, robotics, modern measurement and control techniques, computerized management methods and facilities which provide for greater product or output flexibility. Because shipbuilding is not only considered an important economic and defense asset, but also because it affects many related or interrelated industries and employment, many governments support the industry by direct or indirect aids. Furthermore governments in many countries now take an active part in the ownership of commercial shipyards (England, Sweden, Italy, Spain, Portugal, Netherlands, Taiwan, Malaysia, India, Israel, Comecon countries, etc.). Other government shipbuilding supports consist of:

1. Provision of shipbuilding export credits (Japan, Korea, Brazil, etc.);

2. provision of shipbuilding subsidies (England, U.S.A., Brazil, etc.);

3. provision of new orders financed by the government for expansion of the domestic fleet or investment (Japan, Taiwan, Korea, etc.);

4. establishment of favorable taxation of shipbuilding revenues, profits, or other tax incentives, such as accelerated depreciation (England, Korea, Brazil, etc.);

5. exemption of import and other duties (Spain, Korea, India, etc.).

These government interventions have resulted in complex skewing of shipyard performance and make it increasingly difficult to compare shipbuilding productivity in various countries.

Productivity in the Shipbuilding Industry

Shipbuilding productivity is the efficiency with which the industry transforms inputs such as raw and semi-finished material and labor into output ships. In other words, it is the effectiveness of use of factors of production - the "things required for making a commodity" (Marshall).

Many measures of output have been used in the assessment of productivity in the shipbuilding industry. Each of these measures has shortcomings, and the assessment of shipbuilding productivity remains difficult. Matching input and output measures is particularly difficult, because collected production figures often relate only to larger (2000 GRT) vessels, or larger yards, whereas labor statistics are typically inclusive of the entire industry. Other problems with productivity measures include:

- lack of accepted skills classification schemes
- a multiplicity-of ways of quoting ship production (in particular, serres based on basically commercial criterEa such as delivery are erratic)
- difficulty in putting compensation on the same basis for international comparisons
- di‘fferEng proportfons of subcontracting in the shipbuilding process, both intra- and internationally
- too high a level of aggregation in statistics, e.g., assimilation of repair to shipbuilding.

Possible measures of output/productivity are listed in Table I. The two most satisfactory measures of output, however, are compensated gross register tonnage (CGRT) and value-added.

CGRT, unlike GRT, LWT, or DWT, attempts to allow for the differing levels of complexity of ships, which is particularly desirable where naval vessels figure in some yards' workload.

TABLE 1

POSSIBLE PRODUCTIVITY MEASURES

Unit of Input	Unit of Output					
	DWT	LWT	GRT	CGRT	Sales	Value Added[2]
Employee						
Production Worker						
Manhour						
$ Labor						
$.Capital Investment						
$ Assets Employed						
$ Labor and Capital Input						

1. There is a secondary problem here. When does a vessel become an output? Delivery is the commonly used criterion.

2 Computation requires data on extent of subcontracting and purchased components.

However, the adjustment coefficients are approximate, judgemental, and vary over time and between studies. The present AWES coefficients, for example, will be revised to reflect changes in the OECD system for calculating GRT. The OECD system is being aligned with the 1969 IMO International Convention on Tonnage Measurement of Ships, which changes gross and net tonnages for several vessel types. Table 2 shows the trend in the labor required to produce one CGRT of output. This measure indicates that the output per employee has increased by 45% absolutely in the past eleven years, a gain of approximately 3.5% per year.

Value-added is the difference between total revenues and the cost of bought-in goods and services, and as such may be affected by market imperfections. Value measures of productivity are also less useful in international comparisons and where different technologies, or levels of technology, may be employed. Value-added though is a superior measure than sales, because the latter reflects widely disparate levels of government support to shipbuilding. Table 3 measures the ratio of value added to the capital and labor inputs, and shows that the U.S. shipbuilding industry has made a 12% absolute gain in productivity in the past decade, a rate of only 1% per year.

The ratios of CGRT and value-added to input measures such as manhours or $ value of assets may be crude absolute measures of productivity, but reliably indicate its trend. The overall rate of increase in U.S. shipbuilding productivity is less than 10% per year which amounts to a comparative decline in productivity, +a-a-vis Japanese, Korean, and leading AWES shipyards.

Table 4 and Figure 1 give some summary statistics for the industry. Table 5 summarizes the rate of growth in productivity in U.S. shipbuilding, using a range of measures.

The productivity gains of the U.S. shipbuilding industry have lagged the gains of its Japanese, Korean, and European counterparts. In 1973, the Commission on American Shipbuilding compared some historic statistics on the comparative productivity of major shipbuilding nations over a six-year period, and found U.S. productivity to be only 50% of Swedish, 43% of Japanese.

TABLE 2

CGRT MEASURE OF PRODUCTIVITY GAINS IN PRIVATE U.S. SHIPYARDS

Year	CGRT 000s	Employment[1] 000s	CGRT/Employee/ Year	Manhours/ CGRT
1980	393.3	40.9	9.6	200
1979	545.3	39.9	'13.7	140
1978	289.5	39.6	7 . 3	263
1977	446.6	40.0	11.2	172
1976	373.0	38.7	9 .6	196
1975	276.7	3 5 . 4	7 . 8	243
1970	199.6	30.4	6 . 6	292
Growth in Productivity Per Year			3.5%	

[1] Derived number: proportion of labor force in private yards (709,) x proportion in ASIB yards (66%) x proportion engaged in shipbuilding (SO%), i.e. 23% of total employment.

Note: The CGRT output understates U.S. yards' potential productivity, given a stable workload, because it does not really reduce varying ship types to equivalent tonnage. Only the direction of the trend and its average magnitude are siqnificant.

TABLE 3

VALUE-ADDED MEASURE OF PRODUCTIVITY GRINS IN U.S. SHIPYARDS

(Millions of Current Dollars)

Year	Value Added ÷	(Payroll +	Depreciation) =	Productivity Ratio (PR)	Index of PR
1980	5338	3360.4	163.3	1.51	1.12
1979	4587	'2927.6	152.7	1.49	1.10
1978	4107	2647.5	138.7	1.47	1.09
1977	3823	2494.0	139.9	1.45	1.08
1976	3287	2219.5	110.5*	1.41	1.04
1975	2923	1995.6,.	96.5*	1.40	1.0 3
1970	1610	1161.2	36.0*	1.35	1.00

* Estimated as . 033% of gross fixed assets:. depreciation figures not collected before 1977 Census of Manufacturers.

Source: J. A. Gribbin.

TABLE 4

SU.MARY INDUSTRY STATISTICS, SIC 3731 U.S. SHIPBUILDING

Year	Value Added by Manufacture*	Total 3731 Employment**	Value Added per Employee	Payroll per Employee	Assets per Employee
1981	5776.6	184.9	31.238	19,800***	16,200**'k
1980	5337.6	178.0	30,105	18,953	15,465
1979	4586.9	173.3	26,824	17,120	14,664
1978	4106.5	172.0	23,587	15,207	13,377
1977	3825.0	174.1	21,684	14,136	12,656
1976	3287.3	168.3	19,767	13,346	12,969
1975	2923.2	154.1	17,514	11,956	10,837
1974	2547.3	160.8	15,704	10,909	9,440
1973	2216.1	148.9	14,570	10,257	8,528
1972	1881.3	144.6	13,010	9,836	8,487
1971	1575.3	128.4	12,268	9,189	7,955
1970	1609.8	133.4	12,567	8,704	7,107
1965	1204.1	129.6	9,289	7,266	N/A
1960	860.0	107.7	7,985	6,226	N/A

* 000s of current dollars. ** 000s. *** Projected.

Source: 1977 Census or Annual Survey of Manufacturers; BLS; SCA.

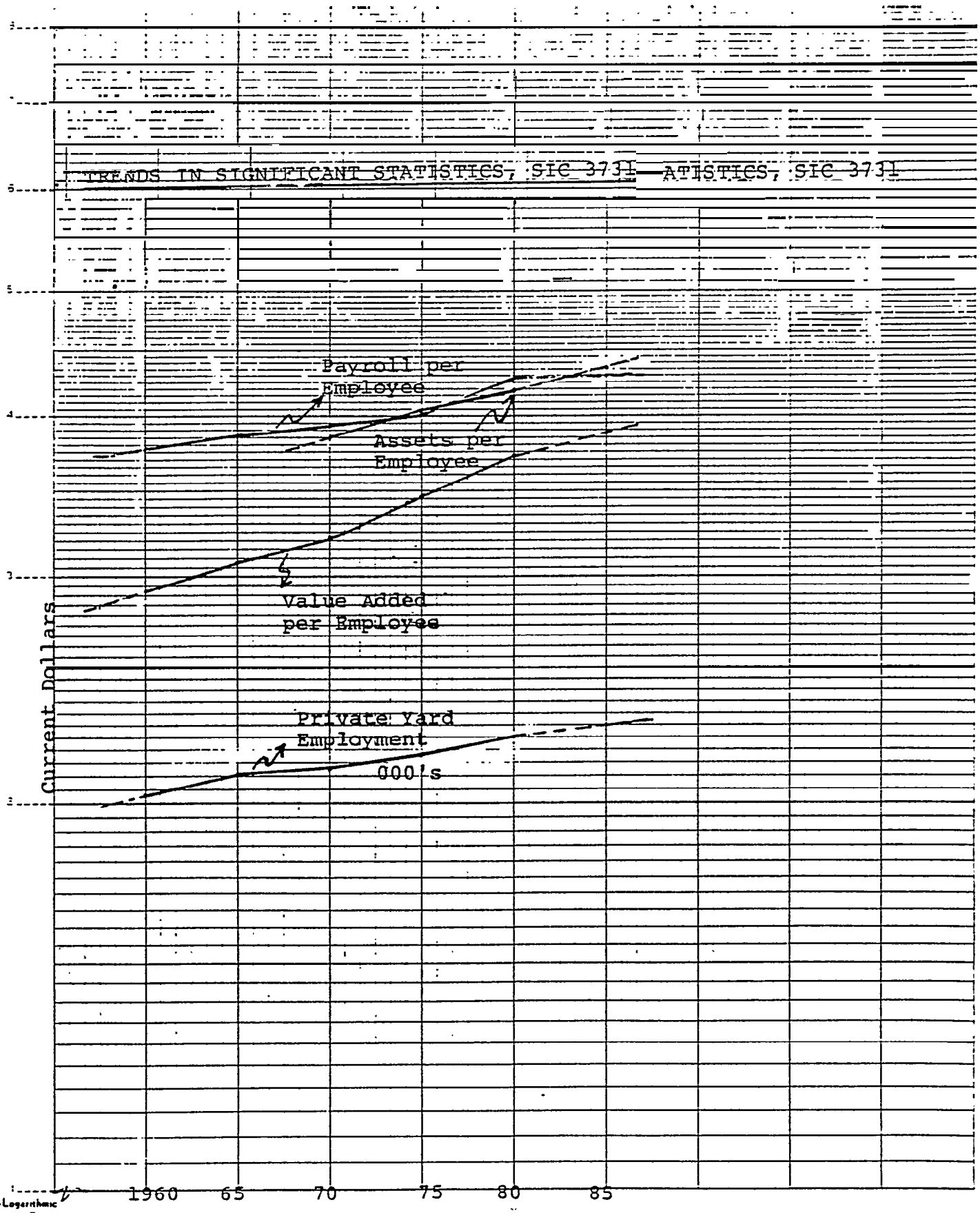
TRENDS IN SIGNIFICANT STATISTICS, SIC 3731
ATISTICS, SIC 3731
Payroll per Employee
Assets per Employee
Value Added per Employee
Private Yard Employment 000's
Current Dollars
1960
65
70
75
80
85
Semi-Logarithmic
ycle x 60 Divisions

TABLE.5

SUMMARY OF RATE OF GROWTH OF U.S. SHPYARDS PRODUCTIVITY
(% Per Annum) (Constant Dollars)

UNIT OF INPUT	UNIT OF OUTPUT	
	CGRT[2]	$ Value Added[3]
Employee	3.5	[illegible]
Productive	4.5	7.2
$ Labor	3.2	3.4
.S New. JnvestTnerlt	NIL	1,8
$ Assets	NIL	-1.9
$ Labor + Capital	2.2	1.1

[1] Fluctuating investment levels make this figure less relevant than alternatives.

[2] CGRT is an eleven year series, 1970-1980.

[3] Value added is a twenty-two pear series and productivity measures have been computed over this longer period where possible.

U.S. manhours per delivered ton averaged 30% higher than Japanese and northern European.

The lower comparative productivity of U.S. shipyards and those in other older shipbuilding countries is considered to be explicable largely in terms of (1) excessive scope for customization demands, (2) restricted opportunity for learning from *series* construction, (3) older facilities and specific technological weaknesses, (4) materials availability and origin constraints, and finally (5) a fluctuating and less effectively utilized workforce, with skill deficiencies arising from (i) the problems of giving training under a casualized employment system, and (ii) the inflexibility of U.S. union practices, which do not facilitate continual redirection of careers and expansion of skills repertoire. The Appledore study attributed 30-35% of the productivity difference to the latter cause alone - foreign yards are posited to have "... superior organization and systems and a more effective workforce 11

Determinants of Shipbuilding Productivity

Productivity is clearly a function of the interaction of

(1) the length of the shipbuilding cycle,
(2) the number of manhours required: and
(3) the extent of non-productive peripheral activities and costs, particularly those arising out of suboptimal work methods.

The Length of the Shipbuilding Cycle

Table 6 indicates that although over sixty commercial and eighty naval ships may be under construction in U.S. yards at any one time, only some twenty commercial and fifteen naval ships are actually delivered per year. This ship-under-construction to delivery ratio, furthermore, has not changed appreciably over the last three decades. It indicates that *a* commercial ship may spend three years under construction, whiie a naval ship averages 5-6 years. WhTle this conclusion ,is admittedly simplified - other factors contribute to the large discrepancies between the number of ships under construction and those delivered during any period of time - the results still indicate that the average modern merchant ship spends over twice as much time in a U.S. shipyard as a comparable ship in an average modern foreign

TABLE 6

VESSELS UNDER CONSTRUCTION VERSUS DELIVERIES, MERCHANT AND NAVAL VESSELS, EX PRIVATE U.S. SHIPYARDS

Year	Under Construction		Delivered	
	Merchant	Naval	Merchant	Naval
1975	96	63	19	3
1976	79	76	22	8
1977	72	88	25	12
1978	60	91	19	14
1979	70	102	21	16
1980	69	99	23	19
1981	49	91	22	26
1982	35	93	26*	19*
Average	66	88	22	15

* Projected.

Source: SCA Reports.

shipyard. Considering the capital invested per ship, it is evident that the additional construction residence time adds at least 5-6% to the cost of the ship. If this figure is augmented to reflect the complementary cost of inventory - which amounts to 4-6 months of supplies for the average U.S. shipyard, compared to l-8 weeks in an equivalent foreign yard - the total capital cost of excess ship and material inventory time increases U.S. shipbuilding costs by 8-9%. Similar comparisons of the cost of construction of naval ships are not possible; combatant and war ships vary extensively in detail.

Table 7 indicates the comparative flowrate in the U.S. versus Japan and AWES. The Japanese lead is very clearly indicated.

Because there has not been extensive U.S. experience with continuous series production, learning curves for the U.S. shipbuilding industry have not been established. Results from naval building programs are misleading, because of the extent of changes expressly allowed for in the production of the series and the frequent splitting of lead ship and series production between distant yards. It is the conclusion of this study that the industry is capable of realizing substantial time savings in series production, with associated reductions in inventory costs. This requires customer acceptance of standardized designs, as noted earlier, but the extent of routine customization of the U.S. shipyard product is found nowhere else and is incompatible with maximal production efficiency.

The Number of Manhours Required

In a study entitled, "Personnel Requirements for an Advanced Shipyard Technology," the MTRH remarked that despite increasing mechanization

> II. ..direct labor costs in U.S. shipyards are between 40 and 50 percent of the finished product cost, depending upon type of ship... (the) ratio (between labor and material costs) has remained relatively constant since 1961, increases in labor efficiency being largely offset by rising wages.
>
> High as these figures are, they tend to under-emphasize the total labor component in shipbuilding. For a ship, labor costs constitute 70 to 85 percent of the value added. ...In the 15-year period from 1958 to 1972, the share of added

TABLE 7 REPRESENTATIVE FLOW-RATES, 1970-1980

IMPORTANT FLOWRATES

	1970	1980
AWES	92	63.6
Japan	179	120
U.S.	51	42
Average	100	81

$$\text{Flowrate} = \frac{\text{Deliveries}}{\text{Under Construction}} \times 100$$

value received by labor in U.S. shipbuilding averaged 77 percent, never falling below 71 percent and rising as high as 84 percent. . ..The labor-intensiveness of the industry is underscored by noting that, among 22 industries, U.S. shipbuilding ranks fifteenth in assets per employee and third in sales per invested dollar."

The basic source of data on the scope of productivity improvement through reduction of manhours is the NarAd-sponsored IHI-Levingston project. This has been characterized as a "unique contract for transfer of Japanese technology," but the project also established valid cost data on the comparative manhour requirements and average length of shipbuilding cycle. It is clear that the length of the d.S shipbuilding cycle could, in theory, be reduced by 50%, from 24 months to 12. Similarly, the manhour requirement could be reduced by 60-70%. However, there are social and institutional barriers to the measures which would be required to effect these changes; these barriers will be discussed as they relate to specific productivity-enhancing measures.

.Table 8 assesses the impact of technologically advanced shipbuilding techniques, involving reallocation of labor, on manhour requirements, and shipbuilding cycle time.

Enhancing Shipbuilding Productivity

Table 9 groups productivity-enhancing measures which have been identified under two headings, Technology and Operations. Clearly, the underlying theme is changeover from a diversified manufacturing technology to a fabrication and erection technology. The changeover is expressed in a production-oriented design approach accompanied by renewed emphasis on industrial engineering considerations such as simplified materials flow, mechanization, use of three-dimensional subassemblies, and preoutfitting.

It also includes introduction of computer control into outfitting, manufacturing, and installation. Most importantly it involves drastic changes in management, planning, organization, and operations shipbuilding. The flexibility required by yards to respond to changing product and output demands has in the past led to:

TABLE 8
LABOR ALLOCATION
(High Class Cargo Ship)

	Labor % Automated Yard	Labor % Conventional Yard
Steel Fabrication	3	4
Panel and Shell	4	6
Outfitting:		
Electrical	4	4
Pipe	2	3
Machinery	4	5
Other	5	5
Subassembly	22	11
Module Assembly	31	
Ship Erection	14	30
Launch'		1
Post Launch Outfit	10	31
	100%	100%
Total MH	68%	100%
Time Required	54%	100%

In addition to manpower savings, this effects a higher facility utilization (more throughput) and less material in process, resulting in higher return on investment capital.

TABLE 9

AVAILABLE PRODUCTIVITY-ENHANCING MEASURES

TECHNOLOGY	OPERATIONS
automated blasting and coating	PERT/CPM
mechanized steel storage handling with remote identification and sensing	computer-aided production control
high capacity wheeled transporters (self elevating)	national shipbuilding standards
cranes with magnetic or pneumatic lift	material classification scheme for definition, procurement, and control of material
automated combined layout and cutting of plates - using tape control, optical projection, or both	strategic planning of ship orders and major supplies
automatic and semiautomatic welding	computerized material requirements planning
automatic beam forming	laser monitored material, component part identification and recording system
prefabrication of large sections	real time inventory control
preassembly of outfit modules	shift ordered material/tool pallet delivery system
preoutfitting of large sections	
preoutfitting of outfit modules	
advanced hull lighting/ventilation during construction	
computer aided design and manufacture (CAD/CAM)	
modularized construction techniques	
flat panel construction	
panel production line	
developable surface design construction	
computer fairing, straking, nesting and layout	
modular scaffolding	
self-travelling staging	
single coat automated painting (hull)	
zone construction techniques	
welding robots	
laser marking and outfitting control	
laser cutting and forming of steel	
computerized heat forming of steel	
block or module turning gimbals	
ship and module transfer systems	
hydraulic module alignment systems	

a. Delay or elimination of introduction of new technology;
b. concentration on investment in basic processes such as steel preprocessing, fabrication, and subassembly, activities which are not among the most labor-intensive in any yard;
c. large fluctuations in shipyard manning with huge manpower turnovers of as much as 67%/year among blue collar workers in U.S. yards for example;
d. large expenditures for training, retraining, and lost post-hiring and prefitting time;
e. lack of medium- and long-term (strategic) planning and management preoccupation with short run as well as day-to-day operational problems, which should be delegated to production management;
f. use of outside naval architects, marine engineers, etc. to design vessels.and other products with the result that designs usually have to be modified to accommodate the particular production/assembly needs of the yard. This results not only in added costs, but also lost time and compromised designs;
lack of effective marketing strategy and approach;
g. lack of standardization in procedures, as well as product parts and manufacturing and assembly standards:
i. insufficient research and development in methods, production aids, basic processes, materials research, etc.:
j. lack of coordination among the industry.

It is difficult to judge if this last factor is due to concern with regard to antitrust actions or simple competitive posture. Yet countries like Japan and Korea, where yards compete much more for the same markets, have found more effective ways to cooperate in and coordinate their research and development in basic processes, procedures, standards, and more. They rely on the maintenance of competitive positions through

1. management efficiency
labor-management collaboration
3. marketing
4. product design.

This approach appears to work very well and to result in efficient and effective technology development and introduction.

Shipbuilders generally have attempted to improve productivity through

1. improvements in facilities and equipment
2. introduction of CAD/CAM (Computer Aided Design/Computer Aided Manufacturing)
3. increasing development of adoption of National

Shipbuilding Standards.

CAD/CAM

While facility and equipment improvements were introduced starting in 1966, practical adoption of CAD/CAM was only begun in 1972-74 and shipbuilding standards are only under development now. U.S. shipbuilding, for example, lags woefully behind other shipbuilding countries such as Japan in shipbuilding standards and even more so in standards for suppliers and equipment manufacturers. Shipbuilding productivity is greatly affected by CAD/CAM and standardization. Japanese shipbuilders for example use more than twice the amount of automatic welding as a percentage of total welding material deposited as U.S. shipbuilders. Computers are increasingly used not only to assist in welding automation but also in welding quality control. This in turn has led to a large increase in the use of welding robots not only for underwater but also open air assembly welding.

Standards

While 13 U.S. national shipbuilding standards have been published and 100 are in various stages of development, Japan has established 7,750 industrial standards with 518 shipbuilding standards which cover all types of components, equipment, materials, fabrication methods, and more. It must be recognized though that Japanese industrial and shipbuilding standards are enforced by an Industrial Standardization Law enacted in 1949. U.S. shipbuilding standard development and adoption is completely voluntary.

Shipbuilding Management and Policy

Shipbuilding management and planning has become a topic of increasing discussion in recent years and various proposals for change have been advanced. Many of these propose adoption of certain techniques and approaches successfully used in other major shipbuilding countries such as Japan and Korea, where shipbuilding management is based on organizational, decisionmaking, and operating structures and procedures founded on quite different cultural backgrounds, human relations, and traditions. While some of the techniques and approaches found successful in those countries may be transferrable, it must be

recognized that the environment in the U.S. cannot be changed in the short run. This makes successful application of some of these methods difficult.

Factors which make Japanese and Korean shipbuilding competitive include value engineering, quality circles, labor incentives, high productivity manufacturing processes, rationalized ship design and production, effective organization, labor relations and flexibility, good supplier and customer relations, and effective production planning management and control. There are some factors which are distinctly different, such as the lack of adversarial relations between shipbuilder and client, management and labor on the other hand. There is a general recognition and acceptance in these countries that adversarial relations and potential litigious actions hinder achievement of ship production efficiency and on-schedule low cost (and therefore price) delivery. Similarly, most supplier, client, and labor issues with shipbuilding management are resolved by various informal approaches with little if any delay. This is quite different from the generally formal approach used in the U.S.A., where procedure, documentation, and even conflict resolution methods are often defined.

Comparison of Technological Status and Productivity of U.S. Shipyards With Those of Japan and Korea

It is difficult to compare U.S. and Japanese/Korean shipbuilding productivity because the type, size, series, and complexity of ships built varies so much. Japan and Korea have largely built series of standard tankers, bulk carriers, and other types of ships, usually designed by the yard itself for construction by the yard. U.S. yards, by comparison, build small numbers of often custom designed and comparatively complex ships. Few of these ships are built in series of three or more.

The technological status of U.S. shipyards is generally lower than that of comparable Japanese and Korean shiyards in terms of technological investment, research and development investment, use of labor, tooling, degree of automation and use of robotics, and application of modern automated management and

control techniques, as well as in the methdods of processing, joining, and assembly.

While U.S. yards use different but comparable technology in steel preprocessing, fabrication, and subassembly, they are far behind in the technology of:

1. block and module assembly
2. manufacture of outfitting components, systems, and block assembly
3. measurement and manufacturing control techniques
4. hand tools
5. weight handling equipment
6. ship handing equipment
7. automatic welding and welding robotics
8. computer aided design/production integration
9. outfitting installation equipment
10. modern staging
11. inventory, tool, and equipment inventory holding and handling
12. computerized management information systems

The curious fact is that many of the technologies used in Japanese and Korean shipyards are the result of basic research performed in the U.S. Where the U.S. lacks is in application research and the effective introduction of technological innovation based on scientific or technological discoveries. While in the Orient each basic scientific and technological development is immediately investigated from the point of view of its use in the improvement of shipbuilding technology and thereby productivity and cost, no such process is evident in the U.S. and when it occurs it is more through chance than by design. In other words, the U.S. technological lack is not the result of unavailability of basic scientific or technological development, but the lack of effective organization of and commitment to application research. One of the reasons may be the large proliferation and separation of responsibilities in technological research and development, and the lack of effective collaboration in such research and dissemination of results of both basic and applications research.

Comparing the productivity of U.S. shipyrads with those of Japan and Korea it is only possible to evaluate their respective performance in the building of comparable vessels such as say PANAMAX type tankers or dry bulk carriers. The limited information available shows that

1. U.S. shipyards require 38-65% more manhours to build the same or similar ship
2. labor productivity in terms of output per manhour for basic measeurable jobs such as stick welding, etc. is comparable and in fact often shows U.S. workers to be more productive

The reasons for these apparently contradictory results appear to be:

1. lack of learning through series construction in U.S. yards
2. lack of effective design/production integration
3. much lower use of automation and robotics, particularly in steel cutting, welding, and assembly
4. loss of chargeable manhours due to
   a. training
   b. after hiring loss
   c. before firing loss
5. outmoded, ineffective tooling
6. ineffective production management

While U.S. shipyard workers appear to perform equally well in the performance of comparable jobs under identical conditions using similar equipment, the percentage time U.S. workers perform actual work is appreciably lower than that of their counterparts in Japan and Korea.

Technological Change and Shipbuilding

Basic Concepts and Issues

In shipbuilding, emphasis is increasingly placed on technological process change as a means for growth, increased productivity, lower unit cost and better ability to cope with technological changes in the product. There is a concern though with the acceleration of technological product and process change and the expanded commitment of resources for product and process innovation.

The strategy that management uses to cope with technological change today affects the industry more than ever before. As in many other mature industries, technological changes pose a substantial threat, as many of the product and process changes and related technological advances have come from outside the mainstream of the shipbuilding industry. For example, offshore technology developments were largely developed by new specialized firms and not traditional shipyards, although offshore engineering structures are natural products of traditional shipbuilding and their development and production have resulted in many changes in shipbuilding product and process technology. Change in technology has had a major impact on the shipbuilding industry by affecting its productivity, its methods of operation, its management, its environment, and even its market. Technological change in shipbuilding must therefore be assessed in terms of its impact, its properties as well as its rate of change. This latter is important to permit evaluation of the conditions affecting innovation and alternative strategies to adapt shipbuilding to such change.

Many social scientists have studied the process of diffusion of change with special reference to the information process while social geographers concentrate on the spatial diffusion of change, and assess these phenomena using contagion models. Resegger was among the first to study spatial information diffusion generated by technological change. While the contagion approach may explain in part how change of technology spreads from shipyard to shipyard, it does not provide guidance on the impact of technological change on the industry or its effect on

growth. The conclusion of his research was that contagion models should only be used to supplement econometric and operations analysis of the phenomena. Economic and econometric research of the impact of technological change was limited to production functions, input-output analysis, labor productivity or other productivity measures. Production functions identify changes in output resulting from changes in inputs, but do not explain the cause of such changes. As a result, such analysis does not permit decisions on improvement of strategic resource allocation to react to the new conditions. Similar comments can be made with respect to input-output analysis where again changes in the relationship can be identified, but the impact of reallocation of resources cannot be evaluated.

In the analysis of technological change we are also interested in the stability of such a change, where stability is usually defined as the rate at which the product or process change introduced will be obsolete. Stability of technological change effects product, process and the general technology diffusion process. Shipbuilding when narrowly defined has usually fairly stable technology changes, but this does not apply when we define the industry in broader terms, as for example by inclusion of the offshore engineering industry.

Technological Innovations or Productivity Improvements

The technological innovations ~~or~~ for productivity improvements available, can be broken down into:

1. management and production control changes
2. process innovations
3. product innovations

1. Management and Production Control Changes

- Integration of design and production through development of standard designs using integrated CAD/CAM techniques
- Development of computerized integrated management information system and production planning/control
- Development of effective strategic planning methodology for shipyard management
- Development of effective purchase control methods and evaluation methodology for make or buy decisions
- Development of computerized ship building project management methodology (to replace obsolete CPM/PERT and similar techniques)
- Improved computerized purchase/inventory policy methods

2. Process Innovation

- Steel blasting and surface preparation
- Laser cutting
- Welding robotics
- Automatic curved section welding
- Standardization of parts programming and cutting controls
- Assembly manipulation and erection equipment
- Laser assisted alignment and welding controls
- Laser marking and outfit installation
- Automated pipe fabrication
- Mobile, self-elevating, full service support staging
- Portable staging
- High-powered magnetic holding and alignment tooling
- Block outfitting and outfit testing equipment
- Block and ship module weight handling and transfer equipment
- Surface treatment

- Fireproof adhesives for metals and outfit materials
- Hand tools
- Interference control measurement and prevention

3. <u>Product Innovation</u>
   - Ship design standards for producibility
   - Standard ships, ship modules, and ship outfit including machinery modules
   - Ship equipment and component standards
   - Advanced ship designs such as
     a. multihull ships
     b. ocean tug-barge systems
     c. lock/dock barge carriers

ON GETTING PEOPLE TO DO WHAT THEY SHOULD AND COULD BE DOING

D. C. Anderson
Professor of Psychology
University of Notre Dame
Notre Dame, Indiana

Dr. Anderson had his doctoral training in experimental psychology in a joint program at the Universities of Portland and Oregon Medical School. He had off-and-on postdoctoral training in the Department of Psychiatry, Stanford Medical Center and Universities of Southern California and Minnesota. He is author of approximately 70 scientific publications, two textbooks, 80 scientific presentations, and several hundred management addresses. His basic research interests center in areas of learning and motivation. Applied research interests concern applications of technology of human performance engineering in organizational settings.

ABSTRACT

Evidence is presented that the manager is the pivotal ingredient in achieving marked and lasting improvements in human work performances. Nine generic manager-controllable systems are outlined that, when properly implemented, will result in across-the-board changes of from 15%-100%+% in work efficiencies. Respectively, these systems are (1) targeting behaviors that must be changed to increase work output; (2) measurement of said behaviors (3) informing workers of the latter; (4) a feedback procedure; (5) coaching workers on how to improve these bahaviors; (6) establishing behavioral goals for change; (7) occasional meetings; (8) social reinforcement for behavior improvements; and (9) a compensation system that rewards these behavior changes. Proper installation of these systems demonstrably produces work improvements considerably in excess of those attempted through alternative approaches. Applications of these nine systems in settings similar to shipyards will be covered.

ON GETTING PEOPLE TO DO WHAT THEY SHOULD AND COULD BE DOING

D. Chris Anderson, Charles R. Crowell, Martin Wikoff, & Joseph Sergio

University of Notre Dame

I wonder if I might be permitted to briefly summarize the recent history regarding efforts at human resource development (HRD) in your industry as I see them, I believe such a summary should begin with the obvious acknowledgement that shipbuilding is an unusually labor-intensive undertaking. It seems to follow from this that competitiveness in your industry thus in part depends upon both how well you use and develop your work forces, However, while all of you doubtlessly agree to the latter, I have found few that believe that development of your labor populations is very feasible in view of what some have termed "unsurmountable obstacles" to HRD in most shipbuilding situations, The problems that attend the shipbuilding enterprise and the generally unfavorable conditions wherein such takes place in most U. S. installations can and have been respresented as of such sufficient number and magnitude as to make for some of the most adverse working conditions on the continent.

One does not have to be very experienced in behavior analysis or industrial engineering to note such factors as unusually heterogeneous tasks, geographically scattered work sites, ambiguous or undefined work areas, tasks that are nonrecurrent nor readily routinized (automated?), work that defies traditional measurement procedures, work populations that often are both only semi-skilled and unused to professional or social or managerial amenities, a combination of enclosed, hot, humid, and acrid working circumstances that challenge the Devil's Cauldron for unsuitability to human presence, managers that neither are well trained nor given the opportunity to do much more than meet material and work-scheduling demands, and often a psychological climate of negativity, threat, and job nonsecurity. Although much of this description also might fit almost any major building construction situation, such is only because it is difficult to capture in words the magnitude or the unchanging aversive character of these circumstances. It thus is of little wonder that recruitment (when jobs are not scarce), turnover, absenteeism, withdrawal at the work station, general irritability wrought of -a pessimistic/fatalistic outlook, high accident rates, etc., have been and continue to be major problems in this industry.

Clearly, the nature and complexity of the above factors can be seen to fully counter those conditions suggested to be of pivotal importance by the two prominent work-motivation theories of the late 1960s and 1970s. Thus, no matter how strong was the desire of your industry to capitalize in some way upon these views in order to increase work output, it probably was not very obvious to anyone how such would have been possible. For example, V-I-E (Valence-Instrumentality-Expectancy) theory suggested that workers would choose to engage inappropriate work activities when the work

situation was attractive (to them) and when said activities expectedly would lead to satisfying (to them) outcomes. Obviously, the circumstances that would require change to meet the criteria of an "attractive situation" within most shipbuilding installations would be too numerous and likely also too costly to rectify to justify the anticipated HRD outcome. And, even if partly rectified, there could be no guarantee of enough pay, job security, and other fringes to make such hoped-for outcomes as likely to be satisfying.

The EQUITY THEORY OF WORK MOTIVATION was that optimum performance would occur when outcomes were thought to be appropriate to one's inputs, By outcomes was meant the sum of both external and inner satisfactions that come from working. Again, it should be obvious from the above description of most shipbuilding situations that most would find so-called "inner" satisfactions few and far between therein. And, even if pay and external fringes were increased to offset this lack of "inner" rewards (thereby defeating the purpose of any HR undertaking in any event by unduly raising the cost of labor), some have argued that such would render any "inner" satisfactions as of even less value. It is likely that industry leaders must have felt quite frustrated because of these seeming insurmountable obstacles to HRD that thus faced them during the late 60s and 1970s.

Alternatively, it may have occurred to certain shipbuilders during the 1970s that one way to increase so--called "inner" rewards might be through the job redesign notions of Herzberg and his associates. By giving more job autonomy, increasing job complexity, and so forth, some theorists speculated that such might increase job satisfaction and, thereby, motivation to work harder. Unfortunately, even this approach likely appeared highly unfeasible within the shipbuilding setting because of the unorthodox and often amorphous nature of most of the tasks therein. It is difficult to redesign a job when it may defy precise specification, and when it already is of suck complexity that skill training is a major problem.

Thus, faced with an almost overwhemlming number of adverse and undesireable working conditions and obstacles 'that would require prohibitive resource drain to surmount, it is not surprising that executives and HR experts turned to other countries to examine how they managed to obtain high level work output from their work populations, Enter the Quality-of-Work-Life (QWL) movement in your industry. Considering the problems noted above, the procedures seemingly involved in this movement appeared relatively inexpensive, less complex, and involved considerably less committed effort and expenditure by already overworked managers than obove-suggested alternatives, The logic 'behind this movement is that worker participation in decision making is propadeutic to meeting the stipulations of both work-motivation theories; namely, participation increases commitment; commitment heightens motivation, which in turn makes people work harder, leading to increased productivity and

greater prosperity.

The procedures designed to increase participative worker input indeed are relatively noncomplex and inexpensive alongside those that would have accompanied such undertakings as, for example, job redesign. Most QWL approaches to HRD at present are based upon procedures that require minimal away-from-work-station meetings, are developed and initiated by paid consultants, and mediated thereafter with only minimum time encroachments on managers, And, the claims of effectiveness in increasing productivity by those that champion the wholesale transfer of QWL "systems" from other nations have been little short of dazzling, It thus is of small wonder that shipbuilding executives faced with the above noted HRD problems might be irresistably attracted to some variant of the QWL movement.

And, to add impetus, it is likely that shipbuilders were influenced by the response of other, even larger, industries that, beset with similar HRD problems, also adopted QWL-type programs. General Motors, General Foods, certain aircraft manufacturers, e.g., Northrup, various high-technology organizations, e.g., Texas Instruments, prestigious banking organizations, and others did and continue to experiment with QWL approaches in hopes of addressing their work-productivity and labor problems, Variously, these approaches have taken the form of team development, decentralization of authority through formation of automous work groups, variations on the Scanlon plan and, of course, quality control circles. In almost all such cases, the human resource problems encountered by these organizations rendered executives as vulnerable to the same features of the QWL approach as likely attracted shipbuilders, I would judge that the "footing" for these programs in your industry was relatively well established when I first spoke to you, in rather controversial terms, of an alternative in my 1981 presentation.

This presentation introduced yet another approach to HRD that appeared at that time to be novel in your industry. This approach was noted to be predicated upon over a half-century of rigorous research conducted in both the human and animal laboratories of experimental psychologists, and thus qualified as originating from the so-called "hard" side of my discipline, It was noted at that time that the techniques and the variables of this new approach were selected for inclusion because they had proven unusually effective in producing marked and lasting behavior changes in laboratory settings. And, I noted that much of our efforts of the past 14 years and those similar in persuasion to us had been dedicated to an -analysis of how to make such into a potent technology that could be used by practitioners that worked with people in any natural setting.

I also briefly and partially summarized some of our own work, spanning approximately a decade at that time, as a way of introducing you to the rationale underlying this new approach, some of its procedures and variables, its remarkeable effects in

producing lasting change in work settings, and its adaptability to a remarkeably wide variety of working conditions. Indeed, for those interested, most of what was said was summarized in the empirical portions of my 1981 and 1982 IREAPS papers (Anderson, 1981; 1982). Please recall at that time that marked and lasting changes in both the nature and amount of work performances demonstrably were shown for both large and modest-sized work populations in all three major areas of human work; namely, service (public accomodations, accountancy, pest control), manufacturing (furniture), and sales (property, insurance). Also noted in the 1982 paper were somewhat novel applications of this HRD approach to University of Notre Dame seniors that worked at the Senior Bar, the Notre Dame hockey team, and the Green Bay Packers.

In every instance, our data have been gathered with two major purposes in mind. The first purpose has been to meet the rigorous scrutiny of editorial review so that they might be published in reputable scientific journals. To that end, it may be of some interest to you to note that a modest portion of our work occupies fully one-half of the 1982 Journal of Organizational Behavior Management. Other of our projects either are in press, submitted for publication, or are in preparation. The second purpose was to develop for respective organizations where these projects were or are being conducted true, marked, and lasting changes in the nature and/or magnitude of work of their labor forces. Generally, and because of the latter, most such organizations have supported our work through grants funded through the University of Notre dame to offset our out-of-pocket costs and the stipend(s) of students that serve as interns while establishing programs therein.

My plans for this year's presentation are, among other things, to again briefly update you regarding our recent applications,: new and/or modified conceptions about this HRD undertaking, as well as suggestions about how this approach might be implemented within a shipbuilding setting. However, after three IREAPS presentations (including the present) spanning a two-year period, participation on the ad hoc IREAPS, HRD committee, submission of a solicited grant proposal on behalf of IREAPS and a small southern shipbuilding organization, invited participation in the summer of 1982 to an NRC-sponsored debate on HRD in shipbuilding,- and active participation with SPC-9 on behalf of development of their traveling short course, all of you might well ask why we do not have data from our approach from applications within your industry by now.

Regrettably, I can only speculate upon an answer to such a concern. First, for reasons fully unknown to me, members from the Department of Labor apparently have taken issue both with me and my work during my SPC involvement with the development of the above-noted HRD short course. They putatively threatened boycott given my continued participation. Thus, although donating considerable time and seemingly leaving at least a modest "footprint" on those procedings,

I voluntarily (or was asked; I am unable to figure out which) withdrew from further participation. In the meantime, I submitted an invited grant through IREAPS to develop a prototype application of our HRD approach within a selected smaller shipbuilding setting. The latter organization graciously had sponsored several visits and had given other concrete signs of support for this undertaking as preparation for this project. The application ultimately became part of IREAPS projected 1983 budget, the unfortunate fate of which most of you must now be well aware. Most unfortunately, after a 1-1/2 year wait, I received notification in May, 1983 that the grant had been "shelved," this despite no hint of other than "full steam ahead" to that date. Thus, two years and three IREAPS presentations later, and among other aforenoted involvements, I find myself enmeshed in marked escalation of our activities within virtually every other industrial sector of our culture (summarized partly below), but fully thwarted from elucidation of our work within your industry. Accordingly, to make the best of this third opportunity to present to you, the paper will procede with three topics; first, having been excluded from actual involvement in the SPC short course on HRD, I would take this opportunity in Section One of this paper to present my own short course. Second, I will briefly update you in Section Two on some of the outcomes of our numerous non-shipbuilding activities in organizations and acquaint you with new conceptions that accordingly have emerged. Third, time permitting, I would in Section Three make yet another proposal on how to capitalize upon the many potential advantages of this HRD approach within your industry, being careful to-take into account the aforenoted adverse working conditions and factors that must be dealt with.

I. SECTION ONE: Short, Short Course on HRD

The "Soft" and the "Hard" Side Of It

The above brief recount of recent history regarding HRD in the shipbuilding industry actually served two purposes, the first being the introduction of this paper, The second purpose is denoted by the fact that this history actually parallels the major recent features of the HRD movement in general in which variations on QWL represent one constellation of approaches and variations on what was covered in my 1981 and 1982 IREAPS papers the other. Although doubtlessly disputable, it can be argued that QWL approaches emerged from the other, so-called "soft," side of my discipline, resting upon what some have termed (inadviseably, I believe) "humanistic" presumptions. Indeed, much of what U. S. HRD proponents presented in Japan following World War II rather unabashedly represented this "camp" of psychological thought.

In fairness, much of what was suggested then (and now as well) represented an attempt to address the alleged cognitive, volitional, and value-related side of the human being. The current presumption

is, as noted, that participative involvement by everyone is more likely to meet these aforenoted needs than are other approaches. And, in order to expedite "meaningful" participative input, almost all QWL procedures rest upon team or group development, combined with some form of consultant-facilitator model. But, while there are many apparent attractions by industrialists to these procedures because of relatively modest costs, minimal disruption of work setting or employee time, and so forth, there are yet other even more critical questions that must be posed of this (or any HRD undertaking, for that matter) during these perilous times of increased competition, productivity slowdown, and the prospects of losing U. S. industrial capability that might be contributed to by our failure to resolve our HRD problems.

These critical concerns revolve around three basic questions regarding HRD approaches. First, do any of them work? In other words, are any of the current HRD procedures capable of potent and lasting bottom-line effects traceable to the increase in productivity rendered from those involved. That is, are respective HRD approaches valid? Second, given an affirmative to the preceding question, are such effects attainable under all work conditions, with all work populations, and for all ways by which humans can contribute to increased productivity? That is, how generalizeable are HRD approaches? Finally, regardless of the selective or the broad-spectrum effects that may or may not attend any HRD approach, the last question deals with cost effectiveness. Is the payback to an organization worth the investment? In other words, what is the social validity of respective HRD undertakings? Now, there doubtlessly are other critical questions as well, including ease and complexity of implementation, and so forth, but these three would seem to be the more critical during this period of apparent industrial turmoil.

It may be noted that psychologists from the so-called "hard" side of the discipline repeatedly have voiced cautions in connection with certain tell-tale signs that have accompanied QWL approaches. These signs suggest far less and quite different levels of effectiveness than promulgated by adherents of this movement. Perhaps one of the most conspicuous of these is the secondary nature of 'its data base. Virtually all of the data initially used to support the introduction of QWL into this country were taken out of context 'from the applications, suggested initially by U. S. "advisors," in other countries. And, while the rise and growth of productivity in other nations may not be disputable-, isolation of those variables responsible for that growth is. Thus, notwithstanding concerns about the varied and questionable rationales proposed for QWL, antagonists likely have been correct in pointing out that its data base is both infirm and fragile at best. Second, the major procedural ingredient -of 'the QWL movement, namely, group formation following the consultant-facilitator model, also has a fragile footing regarding demonstrated -effectiveness in producing desireable bottom-line organizational changes in this country. Woodman and Sherwood (1980), in summarizing much of the recent work on the validity of team

development for organizations, concluded (as did their predecessors of decades past) that such approaches continue to supply more promise than fact in these connections.

Cummings, Molloy and colleagues (1977; 1978) underscore these conclusions in various ways in two summaries of the QWL movement. This is not to say, however, that such approaches are incapable of increasing job satisfaction. Team approaches that encourage participative input may indeed be quite effective at increasing indicies of job desireability. For example, reduced absenteeism, turnover, tardiness, and related benefits very likely could be expected with this approach, as has been the *case* for other undertakings designed to increase job satisfaction, e.g., job redesign. Further, depending upon how such groups are postured and trained, it also would not be surprising that such might come forth with solid, money-saving suggestions regarding production control and production flow.

But, as antagonists of this movement have noted, it is highly unlikely that such approaches would affect any sort of work-performance changes of the nature commonly thought to reflect increased work motivation and sustained effort. Moreover, there is no assurance and indeed many reasons NOT to believe that participative-based group discussions will unravel anything that may reflect upon their own performance malfeasances and/or deficiencies that clearly must be addressed if the productivity slowdown is to be reversed. Humans are notorious for being unable to directly examine themselves per se for possible changes they should make in both the nature and magnitude of their own work behaviors. And, while there doubtlessly are ways yet to be discovered on how to "work smarter" (especially likely in shipbuilding), there can be little question from available polls that we also have declined in our willingness to work in a diligent and sustained fashion. Clearly, remedies for the latter must be developed, and QWL antagonists have argued that the procedures of this movement are not well suited to address either.

The major reason(s) for this latter caveat is because the "group-meetngs" approach championed by QWL proponents; (1) rarely if ever occur where relevant work-performance analyses should take place, namely, at the work station, (2) almost never involve an analysis of the actual work behaviors and behavior changes that might be needed from its membership to improve productivity, (3) almost never focus on means to bring about said explicit behavior changes and (4) thereafter to maintain such, and (5) purportedly never discuss or develop contingency management procedures that repeately have been shown potent in these connections (cf., Crowell & Anderson, 1982a & b; Homme & Tosti, 1971).

It is very difficult to envision either how changes in work output might directly come about or, thereafter, be maintained simply as a result of group discussions unless provision for explicit followup

procedures were made on a permanent basis, This is not to say that participative suggestion-making for purposes of improving production control or working conditions should not be solicited or acted upon, but only that such suggestions are not likely to beget lasting or marked changes in work motivation or persistence. Nonetheless, involving humans in human-engineering undertakings (Alluisi & Morgan, 1976) logically should result in locating worker-environmental interfaces that require alteration for more efficient ("smarter?") work output, thereby admittedly highlighting a possible benefit for QWL undertakings.

From an empirical side, advocates of the QWL approach have not fared well. In part, this likely is because very little attempt has been made to institute QWL approaches in a systematic or methodologically "pure" fashion. Thus, almost all reported QWL undertakings contain numerous confoundings; i.e., the concomitant presence of numerous variables other than those attributable to QWL procedures that themselves may have been responsible for any changes that have been reported. Accordingly, until appropriate controls are developed and then researched, these approaches likely will remain "data shy" and, hence, their adoption based more on faith than on solid information. A related problem has been a certain penchance on the part of QWL adherents to spurn measurement approaches in general. Reasons given apparently are spawned of the belief that measurement may curb or inhibit participative input. Also, because of the intricacies in showing causal relationships between said participation and bottom-line savings, QWL adherents also have argued against measurement on the grounds of the apparent fruitlessness or futility of the exercise. Thus, for the most part, QWL-related effects rest upon a data base of anecdotal speculation, confounded case history, and authoritative endorsement.

In support of the above, it should be noted that at least several organizations that endorsed QWL approaches early on have now come to a realization that such appears not to have improved actual work output. For example, General Foods publicly has declared not to extend their autonomous-work-group experiment at the Topeka Pet Food plant, even though there is at least imperfect evidence that operations there have not suffered from this pioneering undertaking. Further, as one General Motors training director stated to us, they have discovered that increased worker satisfaction attributable to QWL has not been accompanied by increased work output; Rather regrettably, to: deal with the latter abiding concern of elevating productivity in their workforces, one large GM installation recently encroached on one of our research undertakings and hired. away our behavior manager to do for their plant. facilities what he had been doing for us on one of our work-improvement research projects.

Rather than continue to belabor the problems that may or may not attend QWL approaches, we believe that there is another better way to view some of the important issues regarding HRD that both make good sense, are likely to reduce some the conflict that currently exists between different "camps" in the HRD arena, and that serves

as a useful means to introduce what we have been doing these last dozen years.

II. SECTION TWO: New Views and New Data

Corporate- Versus Manager-Administered Systems of HRD

CORPORATE-ADMINISTERED SYSTEMS: Although other equally applicable divisions are likely, it is possible to divide approaches to HRD in terms of whether they are corporately administered or are implemented by the manager. The better known HRD approaches have been those administered by corporations, and include (among others) salary or compensation systems, performance evaluation procedures, profit sharing schemes, training, organizational restructuring, team formation and/or development, incentive/bonus/contest systems, and possibly variations on quality-of-work-life approaches. Any one of these, alone or in combination, can be conceived to be used to get people to do what they should be doing. The question here of greatest concern is whether such systems fulfill their intended purposes. Numerous studies have been conducted in connection with the efficacy of each, the results leading to two conclusions. First, corporate-administered systems have in general failed to produce other than from only moderate to non-existant changes in work performances. Second, what changes that do occur are of relatively short duration.

Illustratively, training is a corporate-administered strategy often employed to either increase employee knowledge about products or operations and/or to provide so-called "how-to" skills. The presumption here is that either of the latter purposes, if mastered by employees, will augment performance on the job. Regrettably, the quite extensive literature on training effects does not justify the apparent faith that corporations place on such procedures. While there is fairly good evidence that training of various kinds may produce before-after changes on pre- and post-training test instruments, the data are far from convincing that training actually influences on-job performance in any major or systematic or lasting manner (cf., Goldstein, 1980). One thus logically may ask the question... "Why then do organizations continue to invest massive resources on behalf of this HRD approach if it is so generally ineffective?" The answer doubtlessly is complex, revolving around the seeming common-sense value of training, various myths that permeate the education of personnel and training directors, and the relative ease is implementing training delivery systems as compared to direct performance-improvement approaches. Quality of work life (QWL) approaches likely benefit from many of these same considerations as well.

MANAGER-CONTROLLED SYSTEMS, ONE AND ONE-HALF DECADES OF RESEARCH: Numerous other caveats can be leveled at corporate-controlled approaches as a means to get people to do what they should be doing, but it is useful at this point to instead focus on those procedures for which there is ample evidence of effectiveness in producing marked and lasting work performance changes. Indeed, note well that the definition of HRD adopted herein means, simply, use of whatever works to narrow the gap between what a human is doing and his/her potential work performance, Also note well that this definition does not focus upon desired changes in job satisfaction. Clearly, it would be foolhardy to dispute the latter as an admirable goal, especially in the face of considerable evidence of an all-time low on this dimension in our U. S. workforces. However, reversing the productivity slowdown means getting people to do more and be more effective than has been the case for the past 20 years. And, unfortunately, there is a large body of evidence that calls into question whether job satisfaction and productivity are causal bed partners, so to speak. The seeming more expedient approach to HRD from our view thus has been to directly deal with performance changes and to employ techniques that also have a strong liklihood Of promoting increased job satisfaction as well. Fortunately, thus far our programs have been accompanied by handsome positive changes in indices of esprit de corps, including reduced turnover and absenteeism, reductions in grievances and formal complaints, and numerous unsolicited statements of program support.

Probably the most meaningful way to characterize these procedures is in connection with those persons in the organization that are essential to their implementation; namely, the managers. Ours and the research of others repetitiously and univocally point to the manager as the pivotal ingredient in both changing and then maintaining desired work performances from their managees. Further, the issue is NOT that of which particular manager characteristics, dispositions or traits are most suited but, instead, of the particular combination of procedures and social skills that s(he) can learn and then unendingly execute. Because these procedures and/or skills nicely group together into at least nine categories, it seems appropriate to label such as manager-administered systems. Bach system is a composite (growing, due to research contributions and refinements) of practices, variables, and activities in which only a manager can engage. These systems respectively are enumerated below with illustrations from our current and past projects.

SYSTEM ONE: System One is the foundation of a manager-controlled systems approach to HRD. It rests upon the presumption that organizations do not hire persons but instead contract with people for given behaviors in exchange for compensation. In effect, organizational change is, by this view, tantamount to obtaining changes in critical behaviors of its members. Indeed, as Luthans and Kreitner (1975) noted, it always is possible to trace desired organizational outcomes to changes that must be made in what, how or in the distribution of behaviors of certain or all of its individuals,

Answers to three questions are involved here. The first has to do with location of where an organization should change. Crowell and Anderson (1982a) have discussed in detail some of the ways by which organizations might locate within its structure where changes might most be needed. This sort of analysis yeilds what might be termed a desired organizational outcome.

A second question concerns what sort of accomplishments are needed in order to achieve the desired outcome. If, for example, a manufacturing facility discovered that it could not quote competitive prices because of extraordinarily high production costs, the OUTCOME is clear; namely, to lower these costs. One obvious place to look in such an instance is at labor expenditures. If a subsequent analysis provided evidence that its work force was spending an disproportionate amount of time on indirect as opposed to direct labor, an obvious ACCOMPLISHMENT would be to increase the proportion of direct time, i.e., increase what commonly is termed the earned ratio, In effect, the outcome of reduced production costs could be accomplished , then, through an increase in direct versus indirect labor hours, System One is predicated upon taking yet another step. This step is to further analyze the situation to discern what sort of behavior or activity changes might be needed by the labor force in question to cut down on indirect hours. It is at the behavioral and no% the accomplishment or outcome levels that human beings can contribute to organizational viability. This is the level of conceptualization wherein individual workers both understand and can exert full control for the organization.

In effect, then, System One is training managers how to target behaviors of their managees that are critical to improvement of their operation. In the present hypothetical manufacturing example, this may require a complete specification of legitimate and nonlegitimate down- or indirect-time activities, Driving a forklift the shortest route to obtain materials may be legitimate, but sleeping , smoking and chatting, or taking the scenic route are not. Table 1 contains a list of outcomes, by organization, that we have addressed as part of our HRD research, the corresponding accomplishments that were thought needed to achieve these outcomes, and the behaviors that ultimately were targeted for change in order to achieve then. These behaviors are again listed in the first column of Table 2. These organizations are listed by type, namely, manufacturing, service, sales, and miscellaneous. For a more detailed def inition of behavior , see Crowell and Anderson (1982a & b) .

Insert Tables 1 & 2 about here

SYSTEM TWO: We have discovered that maximum human development is not possible unless desired changes can be reliably, objectively, and accurately indexed, Thus, managers who are looking for marked and lasting HRD must learn how to measure the targeted behavior(s) in a

fair, consistent, and accurate fashion. There are innumerable ways to do this, including self report, automatic counters, manager observation, and so forth. Many manufacturing installations require employee report (with manager verification) of kind and number of pieces, parts, or items worked on by each operative. In some cases, verification may be more critical than others. For example, if a number of pieces are to be altered in some highly precise way, occasional double checking would likely be adviseable. Or, where pieces are not a product of work, special observational procedures may be needed. For example, the behaviors that define courtesy by clerks or bank tellers requires special observational techniques by managers. Here, great care is necessary to ensure fairness and objectivity, and that the number assigned to behavior truly reflects that behavior.

Finally, many measurement procedures (such as clerk courtesy) best are collected with a sampling technique. In our meat processing project (cf., Table 1), for example, each operative processes such an enormous number of piece5 each shift that it would be impossible to inspect each for preciseness of trim and number and magnitude of defect5 left attached. Hence, a sampling inspection procedure is indicated. However, since this task require5 considerable vigilence and effort, workers can be expected to sometimes find ways to "let down." For example, by learning the inspection routines of their supervisors, worker vigilence and effort would be needed only during the predictable inspection periods. Accordingly, randomness and unpredictability often must be part of the measurement procedure in order to guarantee accuracy and to discourage the human temptation to let down by managees. Table 2 contains a partial and highly abbreviated list of measurement procedures and measures used in some of our HRD projects,

SYSTEM THREE: The preceding systems represent the foundation upon which marked and lasting behavior change (or, HRD) is to be built. Axiomatically, the magnitude and duration of changes that can be obtained will be directly proportional to the competence with which problems have been addressed and surmounted in connection with the initial two systems. System Three represents the first test of how well Systems One and Two were engineered. Simply, 'this third system involves clear and explicit exposition to employee5 OF BOTH WHAT BEHAVIORS HAVE BEEN TARGETED and WHY, a5 well as HOW THEY ARE TO BE MEASURED. For many employees, this step may represent the first truly -clear expression of what it is they are expected to do. Others may become a bit apprehensive of a new and perhaps ominous monitoring procedure and 'how it may be used against them. Parenthetically, our data are that the biggest changes occur when care is taken to eliminate any-sense of threat, and when this new information is displayed in a conspicuous place for all continually to study and peruse. Table 2 designates which of our HRD projects involved systematic study of the effects of this system and which have not, and the respective effect5 obtained. In general, overall behavioral increases of from 6-20% and greater apparently can be expected from proper introduction of this system. Effects of special

interest in connection with use of this system come from program applications with a lock-nut manufacturer, a large midwest bank, a midwest bookbinding firm, a major midwest telemarketing firm, and the hoisekeeping component of a small midwest hotel (cf., Table 2).

Several program applications simultaneously are underway in the lock-nut manufacturing organization. One entails the forming department where workers are responsible for from 2-4 machines, each of which involve four stations. These machines cold-cut metal and then form the result into nuts of various sizes and shapes. Because the process is quite abrasive, numerous machine breakdowns are to be expected, and one of the jobs of each employee is to repair and return the machine to operation each time as quickly as possible. Obviously, the more machine up-time, the more pieces turned out per hour. To decrease repair time, we developed both an exhaustive list of legitimate downtime activities/reasons and standard times for each (over 850 reasons in all). When a checklist report form was introduced to workers, thereby also introducing System Three, an immediate decrease in downtime (and, thus, an increase in downtime efficiency) was observed. This could be determined from Esterline-Angus recordings of machine up-time prior to and following introduction of the program. Thereafter, actual efficiency measures could be calculated simply by comparing the amount of legitimate downtime (compiled from daily work reports with our new checklist, supervisor verified) with actual downtime (uptime subtracted from total paid time). Primary verification for downtime activities entailed comparison of worker report with toolkeeper validation. While it took some training, agreement values in excess of 90% occur routinely.

Another program application in this organization is in the tapping department where each worker has charge over 4-14 tapping machines. These machines tap or thread the nuts that were produced in the forming department. Tolerances are critical here, and must be checked regularly since the process again entails much friction and machines quickly can develop problems. If a batch of incorrectly tapped nuts goes undiscovered, they will go through several costly processes (including cleaning, plating, or both) before ultimate -detection. There thus were two major concerns here. One entailed quick and the other accurate detection of "drift" in tapping precision so that waste and scrap could be minimized or eliminated.

The behavior targeted for change in order to achieve these goals was number of nuts Checked per machine dump (when a "dump" occurs, the batch thereby is considered acceptable). The more nuts checked per dump, the more likely the detection of faulty batches. A "check" entailed whether or not a sampled nut screwed on easily or not to a reference "go, no-go" template or guage. Accordingly, on Dec. 15, 1982, we asked our foremen to engage in an observation procedure that sampled the behavior of operations as to how many nuts were guaged before dumping a catch tray. This procedure provided a baseline measurement period, and we discovered that an average of 3.5 nuts rather than the specified goal of 5 nuts per dump were being sampled. Perhaps even more grevious was that this meant that

some "dumps" occurred without any sampling at all! (It may be noted that foremen often are unwilling to participate in such observational procedures unless organizational support and provision is given, Moreover, even the latter does not guarantee accuracy or consistency, and thus ways to achieve the latter must be considered. Suffice it to indicate that these issues ALWAYS are dealt with in our projects since such are the factors upon which worker credibility, fair and objective treatment, and so forth hang.)

System Three, the full and unexpurgated introduction of procedures, was initiated on 18 Jan., 1983. We introduced the measurement systems both for the above as well as another program we had been developing regarding downtime efficiency. Among other things, this introduction included a report form that requested the time when guaging occurred, the number of pieces guaged, and the number that were "go" and "no-go." The immediate result was an increase in nuts/dump from 70% of standard (3.5 nuts) to 90% (4.5 nuts). Another meeting occurred on 8 Feb., 1983 with operators of the first shift only wherein they again were reminded of the standard of 5 nuts/dump, to use the new recording procedure accurately, and to introduce them to the fact (for the first time) that the foreman was serving as a double-check through actual sample observation. This meeting was postponed until 28 Feb. for the second shift. In each case, sampling rate both rose to 95-100% of standard and was much less variable thereafter. Our measure of foreman-worker accuracy now is correspondance between the spot observations of the former with the report of the latter for given dumps on given days. Agreement has never dropped below the 95% level! A refinement to this procedure now guarantees 100% invariant performance for every worker of the respective shift where it has been operative. On 7 June 1983 we installed dowels for the first shift so that tested nuts are loaded and washers are used to separate those for each dump. Such has fully eliminated "dips" in sampling consistency. The same outcomes can be sure to happen when this procedure is instituted for 2nd shift,

The important point here is that this reliable 30% increase in checking behavior has produced handsome bottom-line effects. Since instituted, scrap has been reduced by two-thirds of 'the preprogram baseline amounts. This means that two-thirds 'fewer defective nuts are now being sent to be washed and/or plated than prior to System Three, Preprogram 'baseline was that an average of 35,000 nuts per rejection occurred. This has been reduced to less than 15,000 nuts. Preprogram percent rejection rate of 1.5% of all nuts that were passed to a present level of 0.4%. The latter figures are calculated by dividing the total pieces rejected by the total pieces tapped. This alone saves the organization a minimum of $50-55,000 per year. And, while number of overall rejections have not changed, the amount per rejection thus obviously has. Further, waste has not increased since detection occurs earlier than it did prior to program inauguration, Similar introduction of a measurement procedure for increased sample inspections as well as for decreased set-up and run times in a midwest bookbindery resulted in a near 30% increase for inspections, a 15% decrease in average set-up times, but only a 1-2%

decrease in run times.,

When the behaviors that defined courtesy were targeted and the scoring system introduced to tellers of one branch of a large midwest bank, reliable across-board increases of 15+% occurred in their scores. These increases were accompanied by an upward trend in the fortunes of the branch, relative to those of the 17 others of this bank. when telemarketing representatives were involved in determining legitimate downtime activities (those necessary to prepare, followup, or service phone clients), downtime efficiencies rose an average of 6%. This was accompanied by an increase in number of daily cold calls that they could (and did) make. As is well known, sheer increases in number of cold contacts will result in increased sales. During this period of time, this firm has had several of its best sales months ever.

SYSTEM FOUR: Of all of the manager-controlled systems, development of a proper feedback procedure is one of the most potent in producing work increases as well as in aiding their maintenance thereafter. The "key" to success with feedback procedures revolves around the term "proper." (Please refer to last year's IREAPS paper for some of the details in this connection.1 As some of you may remember, a proper feedback procedure provides both visual and verbal input regarding the progress individual employees do or do not make in connection with the measurements discussed for System Two. Some sort of routine, individual CHARTING procedure is recommended in this connection. And, for maximum changes, threat of job status should NOT be connected with this system. Table 2 shows those projects where feedback system(s) are in place. All without exception entail the visual display of individual-formed charts depicting measured performance changes. Moreover, employee change on these charts for all projects is entirely voluntary, and protection of independence between charting and job status is guaranteed. (Note well that regular preprogram discipline routines remain in effect, and are administered independently of charted behaviors. However, if the appropriate behavior has been targeted for change and the employee indeed shows increases as a result of SYSTEMS THREE and FOUR, there almost never is need for invocation of the disciplinary routines developed by organizations in any event.)

Several features of our project feedback applications should be noted. First, we have never failed to discover reliable work-performance increases with properly-arranged feedback systems. Second, when analyzed for workers that performed either below, at, or above average prior to feedback introduction, all typically show approximately the same relative magnitude of increase. This finding of across-board increases also applies to new versus experienced workers, young versus older employees, males versus females, and so on. Indeed, if anything, inexperienced workers show faster changes after training with as opposed to without feedback at all.

It also must be underscored that when feedback effects are relatively modest, such usually is a good indication that the performance targeted for change violated one or several of the guideline stipulations given for choosing the target behavior in the first place, Little or no change in response to feedback likely means that (1) employees do not understand exactly what to do to increase the measure, i.e., what behaviors they must alter, (2) their behavior has incomplete control over the measure, i.e., the behaviors of others also are determinants of the measurement, and/or (3) there is considerable passage of time between completion of the act and its display in the feedback procedure. As noted last year (Anderson, 1982), DELAY in any form is one of the most destructive elements to the production of desired performance changes. Thus, these factors of UNDERSTANDABILITY, CONTROLLABILITY, and DELAY usually represent the trouble spots when searching for ways to make feedback procedures more effective.

A good example of the deleterious influence on work performance of these factors comes from our recent work in a large midwestern bookbindery. Here, standards for SETTING UP and for RUNNING binding (sewing and stitching) jobs were determined by competitive bidding rather than exclusively in terms of behavioral and/or engineering considerations. This is the same as conceding that rate determinations often had little to do with behavioral (people) considerations. And, since competition is fierce in this industry, standards were frequently unrealistic at worst, and highly variable as regards "fairness" at best. Because "bidders" often determined standards on the basis of "getting the job" rather than independently-determined work estimations, workers had little control over whether or not they could make desired efficiency levels. In contrast, the standards for quality control in our program application were both constant and fair across jobs and working conditions, and thus they met the criterion of being fully under the control of each employee.. Daily efficiency scores for each activity, i.e., setup, run, and quality-sampling efficiencies (and nonchargeable times, irrelevant to this discussion) nonetheless were collected and displayed in a charted feedback procedure for each worker.

The data for two shifts of the "stitching and sewing" and one shift of the "case binding" departments are shown in Figure 1. These data are displayed for a period prior to worker knowledge of the program (baseline resulting from fulfilling requirements far Systems One and Two), following introduction of the measurement procedures (expectations period; ala System Three), then during feedback (feedback; System Four), and during a reinforcement period (for one shift only; System Eight).

Insert Figure 1 about here

The features of these data that are important for our discussion

involve COMPARISONS BETWEEN efficiency averages for the three measures of set-up, run, and quality sampling efficiencies. Each measure is calculated by comparing what workers reported they did (randomly double checked by the supervisors) and the standards (what they should have done) that were given for each job. Further, efficiencies separately were calculated for each job for each measure, and then weighted in terms of that fraction of a work day that the job actually involved. The data of Figure 1 thus are averaged for each group, and group size is given for each graph. NOTE WELL that the index that is most responsive to change upon introduction of the various manager-controlled systems is the one most directly under the control of the worker; namely, quality sampling. The next most responsive measure is that of set-up efficiencies. Less error is involved with estimations of this portion of a job because, simply, such generally represents considerably less time and, hence, less cost in doing a job.

But, where error is most likely to abound in terms of estimates that involve non-controllable factors, e.g., run times, efficiency changes do not track well the introduction of manager-controlled systems. But, and again NOTE WELL, even here there is indication that considerable effort is made by employees to overcome these impediments. Whenever possible, workers did what they could to achieve and even exceed run-time standards despite an enormous number of verbalized frustrations, statements of odds to the contrary, and so forth. Finally, it is noteworthy that the marked and lasting changes in quality sampling resulted in direct and handsome bottom-line savings to the bookbindery. The decline in waste where the program was in operation was well over 300% below that prior to these behavior changes. And, while no exact figures are available, this translates into savings that easily exceeded $50,000 per year, (We have since discontinued our involvement on this project because of organizational disagreements with critical program-related procedures,)

Some Other Results from Feedback

Other notable effects of feedback in recent projects have been (1) 10+% increases is defatting hams and in number of hams properly processed, and approximately an 9% decrease in meat that has to be reworked in the meat inspection area of a large meat processing organization; (2) A 15-20% increase in downtime efficiency and a commensurate 20-30% increase in phone dialings and contacts in a large midwest telemarketing firm; (3) an approximate 7% increase in downtime efficiency in the forming department of the aforenoted lock-nut manufacturer, (4) a near-100% increase in legal body contacts by the 1982-3 Notre Dame hockey team, (5) 15-25% increases in cleaning performances with contract cleaners for an midsized, midwest airport authority, an radio station, a small midwest hotel, and an university press, and (6) an approximately 15% increase in behaviors that define courtesy in a midwest banking operation.

To restate those features that make this system effective, we

speculate that such factors as anonymity, conspicuous and everpresent display, keeping data current, combining visual with verbal input, separate feedback displays for each individual (coupled with a group or "averaged" display), and so forth likely will render feedback maximally fruitful as an HRD system over the long run, And, if the manager conspicuously does the actual charting, such makes clear his/her abiding interest in each individual, thereby perhaps addressing a current concern expressed by workers that individual effort no longer is appreciated or "pays off."

SYSTEM FIVE: While we are only beginning to gather evidence for the effectiveness of this system, what information we do have suggests potential benefits for managers that learn how to COACH, teach, train, direct, prompt, and cue employees in connection with their charted behavior(s). By learning how to ANALYZE charted deficiencies and how to constructively interact and inform persons accordingly on how to improve, managers often can salvage otherwise failing employees as well as be of considerable help to others to eliminate the frustration of nonimprovement. By coaching is meant (1) being able to carefully observe and locate employee behaviors that, if changed, likely will result in increased employee effectiveness, and (2) how to constructively communicate the latter observations in a useable, nonoffensive manner. Indeed, a moment's thought may reveal how similar what is meant here to the kind of coaching that persons often give while playing golf, tennis, or other individual sports with one another. Individual (as opposed to team) sports seem almost always to promote just the sort of observation and interpersonal exchange advocated for System Five.

Illustratively, a golfer experiencing difficulties with some portion of his/her game very likely will inadvertently sponsor some careful observations by his/her partner. That is, the latter very likely will spot potential difficulties, and then find a way to diplomatically tell the player about potential offending behaviors. And, once related, the partner may even go further through prompting and cuing behavior changes even during the partner's address and swing on the ball! Usually, such analyses are quite behavioral, including whether or not bodily posture and orientation appear proper, the nature and speed of the backswing,, whether the "offender's" head is motionless, and so forth, This observational level,, combined with prompting and cuing, often can result in adjustments that may radically improve a golfer's drives, chip shots, putts, or what have you. And, the very same sort of thing happens for tennis in terms of racket orientation, arc of back/fore swing, body orientation toward the ball, and on and on,

Unfortunately, precious little of the above practice occurs in the work. setting. But, our data seem definitive that when it does, managers often are able to produce rather major changes in problem or nonproducing employees.. What is entailed is learning how to observe work behaviors as analytically as one golfer observes the golfing behaviors of another, The analysis must include learning how to correlate the presence or absence of given behaviors with the

measured level of daily performance. Thus, a given worker may receive low efficiency scores because of overly complicated activities in fetching materials, loading a machine, stripping a wire, and so on. Or, the problem may lie in too many breaks, periods of inattention that permit too many machine malfunctions, etc. BUT, BEING HELPFUL AT THIS LEVEL REQUIRES THAT THE MANAGER OBSERVE WHAT IS HAPPENING AT THE WORE STATION AND NOT SOMEWHERE ELSE! And, once observed, a manager must acquire the skills of diplomacy to nonoffensively communicate such to his/her employee(s). While we have omitted (inadvertently) this intervention from many of our projects, where it has been present it sometimes has been possible to produce as much as a lasting 20% increase in overall efficiency.

SYSTEM SIX: Managers also can learn to set appropriate goals with employees. This is not a new intervention, likely having been around even prior to the formal introduction of so-called management-by-objectives (MBO). However, there are major differences in meaning between the present and MBO approaches. Locke (1975) and others, for example, have shown that rather handsome performance changes of an nonexploitative nature can be achieved when managers learn to establish modestly difficult goals with individual employees. Moreover, employee acceptance also seems important for these effects. Thus, Locke's data are that performances are better when conducted in connection with modestly-difficult and agreed-upon goals than when no, easy, or overly difficult goals are involved. Table 2 shows the few projects wherein this system has been applied on a components basis. The magnitude and duration of effects always has exceeded 10% work-performance increases, often lasting over several-month periods without further embellisments. Unfortunately, not all of these goals were set either individually or via participative input and mutual agreement. Even so, goal setting invariantly has been effective, and sometimes quite spectacularly so!

Again, while a bit speculative since our data are as yet incomplete, we have suggestions that appear to make this system work better for both the employee and the manager. First, goal setting ideally should be done on an individual basis rather than in terms of a group average or standard of excellence in mind. By learning how to interact with each employee individually and to establish goals that are fair and reasonable in terms of that person's most recent performance record,. managers are most likely to reap changes that will last. Further, such goal setting probably should be conducted at regular intervals such as weekly or monthly. In addition, once participatively established on an individual basis, the goal probably should be circumscribed on the chart used for feedback in a manner that spans the time frame to which the goal applies. Thus, INDIVIDUAL, ROUTINE, and VISIBLE goal setting procedures probably will give organizations and their employees the best of that which is available from this manager-administered system.

SYSTEM SEVEN: We only briefly need to touch upon the material here since it is the least researched and, thus, most speculative in terms of effects of the nine manager-administered systems. In

essence, managers can learn to conduct meetings in connection with HRD. While, as noted above, we do not advocate meetings as a general approach to HRD, there nonetheless probably is some value in occasional off-work-site gatherings for purposes of dispensing group feedback, coaching, information giving, and so forth as well as getting employee input on how to refine, fine-tune, and otherwise improve HR conditions. We also believe certain guidelines probably should be followed in connection with holding meetings.

First, they should be few in number. Meetings are costly in terms of time, resource deployment, and cost-benefit ratios. Second, they should be tightly run in that rigid time frames should be established and maintained for their duration, topics should be well defined and few in number, i.e., 1-3 topics or issues, adherence to topic completion/fulfillment should be rigid, and an agenda prior to the meeting should be developed and displayed to assist in following these practices. Finally, probably some form of running-minutes procedure should be followed, and prior uncompleted topics should be integrated into the upcoming agenda automatically. And, above all, group meetings should not be used to dole out wide-ranging discipline or rewards. To be most effective, the latter best are given out individually. So-called group "ream-jobs" are especially counterproductive to the achievement of marked and lasting work increases.

The latter point should not be taken to mean that meetings are not useful in dispensing individual recognition. Some of our very best managers have become adept at this practice. Open recognition and praise within the context of a meeting can, if properly implemented, be an exceedingly powerful way of supporting people to both continue and/or do a good job. However, the phrase "proper implementation" again is quite important here, Managers generally find it difficult not to couple recognition with negatives, invectives, and/or threats. It is as if they feel they will be taken advantage of if they simply dispense unadulterated praise. In addition, giving praise to some and withholding it from others in a group setting has its dangers. If, for example, praise is given unfairly, inconsistently, or in biased or discriminatory fashion, its effects will likely undermine the intended support function. Thus, a rule of thumb might be to refrain from dispensing recognition at meetings unless certitude of fairness, objectivity, consistency, and nonthreat is guaranteed.

SYSTEM EIGHT: While it may be difficult to single out one system as perhaps more critical and/or important than another, there can be little question about either the significance or the potency of reinforcement as a manager-administered tool for improving and/or maintaining good work performances, morale, and job satisfaction. This "system" is predicated upon important premises that represent fundamental "hingepoints" or foci of distinction with alternate approaches to work improvement. These premises are, respectively:

PREMISE ONE: All behavior has consequences (3 kinds)

A

PREMISE TWO: Behavior is a function of its consequences (3 "great" laws)

PREMISE THREE: What follows often is more important than what precedes behavior

Consider first Premise One. The essential message here is that virtually every activity that persons can engage in will be followed immediately by circumstances that are discriminable and potent. Moreover, there is a considerable body of evidence to suggest that these circumstances can be categorized by the residual feeling they create. Accordingly, some consequences can be classified as positive in that they leave us feeling quite satisfied. If given the opportunity, we likely would seek more of such consequences. Other consequences can, however, be classified as negative in that, if given a chance, we would activily escape or avoid them. Finally, there are times when our behavior is followed by consequences of no particular concern to us. We neither would seek or avoid them and, thus, can classify these as neutral in the affect they produce.

The second premise details the behavioral effects of these three categories of consequences. Generally, this premise is that all consequences will influence behavior in important ways. But, these "ways" differ according to the nature or category of the consequence. Again, there is a considerable body of scientific evidence that supports these generalizations. First, if a consequence meets our specification of "positive,,, the evidence is that the probability of the behavior recurring will be increased. Indeed, so consistent has this finding been that it takes on the status of A SCIENTIFIC LAW. One (positive consequences) always results in the other (increases in behavior liklihood). Of similar certainty, negative consequences will decrease the probability that a behavior will recur. Given an unpleasant outcome, behavior is sure to occur less often thereafter. Finally, neutral outcomes also invariantly are -associated with lowered probabilities of behavior recurrance, but the rate of decrease is slower than if a negative was involved, In effect, behavior will diminish in frequency more -slowly for neutral than 'for negative consequences.

The final premise really hits squarely at the heart of the differences between the present and alternate approaches to HRD. This is because it directly challenges traditional or common-sense meanings about the term "motivation." The latter is perhaps one of most widely used concepts in the English language to characterize the performances of people. If people do not perform well, we *frequently couch our explanations of such in terms of diminished motivation. Conversely, if persons do work well or even above average, we are just as likely to appeal to an explanation that essentially implies increased motivation. In effect, motivation connotes a sort of energy notion as a way to depict -the seeming dynamic character of work behavior. Hard workers often give the appearance of higher energy expenditure while less effective

employees can (but not always) seem quite lethargic andunenergized. It thus is not surprising that managers often resort to strong emotional appeals and exhortations, strongly worded restatements of expectations, threats of unpleasant consequences, and the like (often at meetings) as a way to galvanize workers to perform harder. Such can even resemble the image many of us have regarding the halftime message of a coach to a team that has fallen behind in the score. Or, of an evangelist preaching repentance to a congregation of "sinners" at a religious revival meeting. It is as if better performance can be expected from "charging up" the audience.

From a scientific perspective, the preceding embodies an "antecedant" approach to promoting behavior change. It rests upon the proposition that "it is what is done PRECEDING and not following a desired change that counts." And, judging from the available evidence, one very likely can expect some change from such tactics. There are perhaps no better examples of this than traditional training approaches or the prototypical sales meeting. Typical training (and sales-meeting) approaches remove employees to off-work-site settings for purposes of imparting either knowledge or how-to skills of some sort on the presumption that such will influence subsequent on-the-job performances. (In the case of sales meetings, the latter usually is coupled with "rousing" emotional appeals as well.) Regrettably, the evidence as noted for both of the latter is that only modest and quite short-lived subsequent performance changes can be expected. That is, performance indeed may change for one or two times, but thereafter revert to former levels. APPARENTLY, SO-CALLED "INNER" CHANGES IN PERSONS, MEDIATED EITHER COGNITIVELY THROUGH TRAINING OR EMOTIONALLY THROUGH STRONG APPEALS, ARE NOT SUFFICIENT TO OBTAIN LASTING PERFORMANCE INCREASES ON TEE JOB!

Thus, the real function of System Eight is introduction of procedures designed to not only obtain marked initial changes but, more importantly, to perpetuate them on an indefinite basis. And, such is exactly what our analysis of the scientific literature suggests; namely, what follows (consequences) is of pivotal importance for promoting both major and lasting increases in that behavior thereafter, Getting people to do something differently one or two times thus likely can be accomplished by either approach; i.e., the so-called motivational (antecedant) and the approach that focuses on consequences. And, initial changes admittedly can be marked for either approach. However, maintaining and even obtaining further increases and changes depends importantly on consequences since antecedants demonstrably are of little help for these purposes, Again, instead of so-called "inner" changes preceding performance increases, the data seem to indicate that the reverse of this view is more likely the case. NAMELY, PERFORMANCE CHANGES OFTEN SEEM A PREREQUISITE TO THE EMERGENCE OF PUTATIVE "INNER ADJUSTMENTS."

POSITIVES, NEGATIVES, NEUTRALS, OR ALL THREE. There are numerous procedural caveats that accompany System Eight. First, a manager immediately is confronted with the question of which of the three

categories of consequences to use as an HRD "tool." Indeed, based upon considerable research, such decisions apparently are not very perplexing to most since the work setting abounds in managers that rely upon heavy use of negatives rather than positives. Managers apparently quickly discover the "power of the 'negative approach'" to work management. However, there is a possible choice here that deserves considerably more attention than apparently given by most. The BASIC QUESTION is whether managers should choose to follow desireable work performances with positive consequences, undesireable performances with negative and/or neutral outcomes, or both (surely, most would agree that it would be unwise to follow good performances with negatives or undesired performances with positives).

As it turns out, there is not much controversy over which approach is best in connection with the mission of an HRD program as outlined herein. There are surveys attesting that managers that generally are negative are viewed with less respect, credibility, or intelligence than are managers whose style generally is positive. (The exception to this finding occurs at the highest executive levels of corporations where almost any form of recognition may be viewed as better than none.) Moreover, our experience is that considerable side effects, including sabotage, unusual absenteeism, excessive sick days, and so forth can be averted with managers that adopt the so-called "positive approach." Significantly, a major message in the recent best-seller 'In Search of Excellence" (Peters & Waterman, 1982) fully attests to the above, The authors of this work point to a striking correlation between corporate success and the pervasiveness of managerial positivity (and, correspondingly, general absence of an atmosphere of threat, negativity, and unpleasantness). Finally, and perhaps most important of all, the scientific literature boasts of no evidence that complex work behaviors can be established through exclusive negative means. Indeed, one of the more solid behavioral laws is that establishing and maintaining complex performances best is accomplished through the exclusive and deft use of positive consequences.

It may be noted that. the positive approach, as practiced successfully by managers, is a bit more complicated than simply being nice to employees, Two quite important ingredients actually are involved. The first, of course, is learning how to be reinforcing to others, That is, learning how to be a functional source of pleasantness per se. Our research is that such learning does not come easy to most of us and often requires considerable feedback, coaching, modeling, goal setting, and so forth in order to develop. The second ingredient pertains to what psychologists term "contingency." Recall the second premise outlined above regarding the effects of consequences. The general message of this premise is that behavior is a function of said consequences. Thus, if a manager rewards inappropriate behaviors, such will increase in the same manner as if s(he) had rewarded productive performances. The term "contingency" thus refers to the arrangement and/or timing of

rewards so that they follow only after work behaviors that are to be increased. In this manner, a manager also rather automatically capitalizes upon the finding that neutral outcomes reduce the liklihood of inappropriate behaviors, By only rewarding good work, one invariantly extinguishes other nonproductive activities.

Learning how to contingently dispense reward also does not come easy for most of us, and accordingly usually requires considerable skill learning. The major point here, however, is that proper implementation of System Eight, while of critical importance to obtaining and then therafter maintaining work increases, is both complex and difficult for managers to implement., Almost always, special effort on the part of the organization is needed to assist manager development at this stage,

There are some important rules of thumb that can be useful in making this system maximally effective as a tool for HRD. First, reward size often is not as important as frequency. Indeed, FREQUENT SMALLER REWARDS often work much better in promoting work improvement than fewer larger ones. Second, any DELAY between the occurrance of a desired work behavior and a subsequent reward will reduce the effectiveness of the latter. In fact, the longer the delay, the less likely an strengthening effect will occur at all! Charts can be especially helpful here. By calling charted performance to the attention of an employee and then following such with reward (when appropriate), the manager can treat the performance AS IF it had just occurred, It is as if the reward is dispensed for the MEMORY of a given performance, Third, reward probably should not be given for every occurrance of a desired behavior, once the latter has reached an acceptable rate or level. In effect, REWARDS CAN BE SCHEDULED so that they are given only every now and then with great utility. Such conforms to a prescription for maintaining performance once it has reached a desireable level, PARTIAL REINFORCEMENT, the name given this procedure, actually appears to perpetuate behavior indefinitely, apparently even better than continuous reward procedures. The only issues of concern here are that (1) the rewards be timed on an unpredictable basis and (2) they not be reduced to a level that either is unfair or unable to maintain performance.

As it turns out, it is possible to categorize rewards in a way that is quite important for any HRD undertaking, Rewards can take the form of THINGS, ACTIVITIES, or PEOPLE, Our research has led us to some speculations regarding which of the above categories may be most effective in work settings, These speculations take the form of so-called proverbs; namely, (1) if you have potential union problems, (2) if your workforce generally performs below a "fair" standard, and/or (3) if your managers are generally aversive, do not choose rewards from the THINGS category. Further, much of what is meant by "manager development" relates to increasing their social skills of positive reinforcement, This undertaking would be short-circuited were an organization to begin with a tangible reward system for employees. Moreover, there seems no more quick nor striking way to show managers how effective they can be than when they discover how potent their social praise can become in

increasing employee work performance. And, the invariant fringe benefit of the latter is increased esprit de corps to boot!

At least four guidelines are important in developing these social skills. First, manager VULNERABILITY is required in that praise and/or social recognition rarely is very effective unless given genuinely. Second, manager VERSATILITY is needed in that different managees prefer their recognition in different ways. Learning about these ways and then developing the requisite method of execution is critical for manager effectiveness. Third, VARIABILITY is essential. All of us quickly habituate to repetition. If managers cannot learn how to vary both the delivery and nature of the recognition that they dispense to given managees, they soon undermine their potential potency. Finally, fourth, VISIBILITY is essential. Wherever possible, recognition and/or praise should be given for all to see and/or hear. In this manner, the recognition that is given is enchanced and, for those that did not receive it, can be seen as available to be earned.

Recent applications of this system in our various projects include the bookbindery undertaking noted above (cf., Figure 1), our bank operation, in our furniture manufacturing program, and, perhaps most impressively, in an application with the 1982-3 University of Notre Dame hockey team (cf., Figure 3). As seen for the bookbindery project, social reward further increased quality sampling and set-up efficiencies, and exerted a modest influence on run efficiencies. Manager praise exerted equally remarkable effects in the bank application in two quite distinctive ways. First, the addition of manager praise increased the average courtesy behaviors of bank tellers approximately 15% where it was applied. Moreover, this latter system was reponsible for maintenance of high-level courtesy over many weeks. During a two-month period at the end of 1982 and beginning of 1983, this program fully was discontinued. Courtesy declined to preprogram levels during this time frame. Feedback returned courtesy to the previous feedback-effect level. And, when manager praise again was instituted, courtesy performance rose to equal its highest level ever! These latter two findings are highlighted in Figure 2. Moreover, when the manager-controlled systems were applied to the cross-selling behaviors of the account representatives of one major branch of this bank, the same systems-related increases in this behavior occurred as for courtesy by tellers.

Insert Figures 2 & 3 about here

In contrast to our hockey-team application discussed in last year's IREAPS paper (cf., Anderson, 1982), we worked with a much smaller and slower team for the 1982-3 season. Thus, although targeting legal hitting as the behavior to increase, such proved quite difficult to achieve for these players. Figure 2 nonetheless shows the progress on this measure in response to the various systems that were introduced throughout the season. Note that the overall

win-loss ratio did not begin to prove favorable until the introduction of System Eight, namely, manager (the coach) praise, even though average hitting rate evinced handsome increases throughout. Prior to the praise, increased hitting served to narrow the score differential, but not to increase winning. However when, following training, the coach systematically initiated individual recognition for hitting rate, not only did players increase further the latter but team fortunes began to turn around. By the end of the season, and after a rather disastrous beginning, the team was able to achieve a sufficiently high league standing to make the playoffs.

Much of my first IREAPS presentation (Anderson, 1981) was developed around our program in a furniture manufacturing organization. There, manager-controlled systems were shown responsible for overall increases in work efficiencies that frequently exceeded 15%. Feedback was shown to exert a minimum across-t ·ard increase of 6-7%, and manager praise added the remaining amount. These latter figures have improved since my last presentation, with some departments showing an additional 10-15% increase. The latter clearly is attributable to increased effectiveness of managers as they have become more proficient in dispensing recognition. Recently, we added a new dimension to this system by introducing a tangible reward program (noted briefly in the 1982 IREAPS paper). This system conformed to an token economy in which specially made coins were offered for designated increases in efficiency that exceeded predetermined department averages, Thus, for a 4-9% increase above the department average, one token could be obtained: for 10-14% two tokens were offered; and, for 15% or better, three tokens could be achieved,

Tokens could be exchanged for vended items in the vending room (e.g., food, beverages, sundries, electronic games) or for a chance to play the "mystery machine" that issued prizes on a lottery-like basis. Both instant and/or monthly "winnings" were possible from such plays, the monthly grand prize ranging from a choice of expensive catalog items to a trip for two on Republic Airlines to any of its destinations.

Because of union-management misunderstanding, considerable pressure was exerted by the former on employees not to accept these tokens, so not all workers in every department felt free to accept them. We thus kept track of those that did and those that did not. The overall effect of the token system on plantwide efficiency exceeded a 10% increase, this being clearly attributable to much greater acceptance in some versus other departments, Regretably, an state NLRB ruling required discontinuation of this tangible system in the late Spring of 1983. Average efficiency levels since have subsided to pre-token baselines,

SYSTEM NINE: Although we have as yet to collect much data on the efficacy of this system, there is little doubt that maintenance of

changes wrought by the preceding systems likely would profit from routine employee-manager performance reviews and/or audits. Here, managers occasionally should assess, on an individual basis with each employee, progress being made with the target behavior. Discussion here likely should focus on definitions of satisfactory and unsatisfactory progress, measures that might be taken to remedy the latter or to more appropriately reward the former, program extensions, and so forth.

SYSTEM TEN: Strictly speaking, this system is not manager-controlled. Nonetheless, once the preceding systems have been installed, there is mounting evidence (cf., Mirman, 1983) that tying behavior changes into the organization's compensation system may go a long way toward perpetuation of the manager-controlled-systems HRD approach. General Mills has found this latter merger of corporate- and manager-administered approaches to be highly useful in promoting increased sales effectiveness in their enormous sales force. At present, 90% of their annual performance evaluation is determined by activities rather than sales because of the general effectiveness of the manager-controlled systems approach.

III SECTION THREE: Getting Started in the Shipbuilding Industry

Doubtlessly, some of you that read this paper may raise objections to use of the manager-controlled-systems approach to HRD in your industry based on the uniqueness of your work, work setting and/or populations, or some related factor. Thus, such an approach, it might be argued, is unfeasible because of the inherent unmeasureability of the work, the job-shop-like nature of the tasks that are involved, the enormous burden it might add to the work of managers, or even perhaps to the inherent resistance anticipated from both the latter and the workforce in general. There are probably no responses to the latter that would be as truly convincing as an actual demonstration to the contrary. However, given the enormous variety of current successful applications, there simply is no hint in our experience that there are either tasks, working conditions, and/or management personnel that would not show marked and lasting profit from an application of the HRD approach outlined in this paper. If human productivity from manager-controlled systems demonstrably increases in the auto industry, hotel and other service industries, food-processing, bookbindery, lock-nut manufacturing, professional football, CPA firm, banks, and various sales organizations, then the logic suggesting nonapplicability due to the uniqueness of shipbuilding tasks seems hollow indeed.

A second objection might be that of excessive costs. Yet, considering that new equipment often has represented the traditional response of manufacturers to the challenge of increased productivity where enormous capital outlay frequently is involved, no such investment of even remotely similar sum is required for the undertakings suggested herein. Moreover, manufacturers typically look for 15% return on such capital outlays, which by comparison is

a miniscule amount alongside the sometimes several 100% return realized from a manager-controlled-systems approach. Our data are that the preceding objections simply are highly unlikely.

More to the point, however, are concerns regarding complexity and effort, There is little question that proper implementation of Systems One and Two as outlined above can be exceedingly time consuming, effortful, and complicated, And, even when finally consummated, the effort required from managers to learn new procedures and skills can be marked and considerable.

We thus have a suggestion about program development in your industry that at leas% partly may address these concerns of complexity and unusual effortful committment. This suggestion emerges from the presumption that manager authorship and ownership can be potent ingredients in both program development and maintenance. A further presumption is that managers often can, with proper training and guidance, serve as helpful guides in the initial stages of locating behaviors to be measured and changed. Accordingly, we would propose the following procedures in order to get started within your industry,

STEP ONE

By beginning with a group of from 3-6 front-line managers and their respective supervisors, proctored by an experienced practitioner of the manager-controlled-systems approach, all sequentially would be exposed to the details that comprise each system. Thus, following an overview of the approach, the group initially would be given an in-depth exposure to the details of System One. They then would, for respective. manager-supervisor dyads, be held responsible to develop homework assignments through application of this system in connection with their own operation, Each dyad thus would be entrusted to target a behavior that should be changed for their respective collection of managees. Specif ication of this behavior and justification for its choice should be in accord with the criteria outlined by the proctor as appropriate for this system. Each dyad then would represent their choice, give their justifications , and state the rationale behind this- choice before the group. Following discussion, 100% group approval (including the proctor's) would be required before proceding further. Indeed, such approval would be required for every dyad before proceding to the next step.

It may be noted that, in the manner outlined above, each member of the group would rather automatically assume responsibility for every project, and not just his/her own. Thus group approval would indicate that every member- felt comfortable that! each homework assignment both produced a feasible as well as worthwhile outcome. This same stipulation should apply to all subsequent steps as well.

STEP TWO

Group members then would be fully exposed to the details of the next system, System Two. Each dyad (manager and supervisor) again would be required to develop a homework assignment regarding measurement of the behavior specified in Step One, make a presentation, and obtain of approval from their peers (and proctor) to procede. At this point, the foundation for as many applications as the number of participating managers would be ready for System Three.

STEPS THREE-EIGHT

In effect, subsequent steps would procede in much the same fashion as outlined for Steps One and Two. Each thus would consist of an initial comprehensive presentation of the details of the system to be instituted. For the systems that entailed skill learning, such of course would have to be arranged for by the proctor to be consummated on these occasions. And, once homework-presentations were approved by the group, each step would be executed by the manager (with supervisor help) with his/her managees.

Clearly, a given number of these sessions likely would have to be devoted to trouble-shooting, fine-tuning, and otherwise ironing out problems. Moreover, the proctor likely would have to spend much of the interim time working individually with group members as part of the program-installation undertaking.

Finally, once the full systems for each application were in place and working, the organization in effect would have managers that themselves could serve as proctors for new groups. Note that the major benefits from this suggested approach include foundation involvement at the outset from personnel that would be critical to the function of the organizational component that is targeted, ongoing reciprocity between training and actual skill learning, and actual authorship of the final HRD application by the manager that is entrusted to execute the systems. About the only concern that would remain would be for the organization to establish mechanisms to recognize the managers for their participation and resulting contributions. Accordingly, the next step would be upper-level organizational involvement for purposes of developing recognition systems for participating managers. The basic outline of such systems would in all liklihood follow the manager-controlled-systems format.

REFERENCES

Alluisi, E. A., & Morgan, Jr., B. B. Engineering psychology and human performance. ANNUAL REVIEW OF PSYCHOLOGY, 1976, 27, 305-330.

Anderson, D. C. Human performance engineering: On reversing the productivity slowdown. PROCEEDINGS OF THE 1981 IREAPS TECHNICAL SYMPOSIUM, 1981, 8, 335-358.

Anderson, D. C. Human performance engineering: A technology for developing the human resource. PROCEEDINGS OF THE 1982 IREAPS TECHNICAL SYMPOSIUM, 1982, 9, 555-585.

Crowell, C. R., & Anderson, D. C. The scientific and methodological basis of a systematic approach to human behavior management. JOURNAL OF ORGANIZATIONAL BEHAVIOR MANAGEMENT, 1982, 4, 1-32.

Crowell, C. R., & Anderson, D. C. Systematic behavior management: General program considerations. JOURNAL OF ORGANIZATIONAL BEHAVIOR MANAGEMENT, 1982, 4, 129-163.

Cummings, T. G., Molloy, E. S., & Glen, R. A methodological critique of 58 selected work experiments. HUMAN RELATIONS, 1977, 30(8), 675-708.

Cummings, T. G., & Molloy, E. S. IMPROVING PRODUCTIVITY AND THE QUALITY OF WORE LIFE. New York: Prager, 1978.

Goldstein, I. L. Training in work organizations. ANNUAL REVIEW OF PSYCHOLOGY, 1980, 31, 229-272.

Homme, L, & Tosti, D. BEHAVIOR TECHNOLOGY: MOTIVATION AND CONTINGENCY MANAGEMENT. San Rafael, CA.: Individual Learning Systems, Inc., 1971.

Locke, E. A. Personnel attitudes and motivation. ANNUAL REVIEW OF PSYCHOLOGY, 1975, 26, 457-480.

Luthans, F., & Kreitner, R. ORGANIZATIONAL BEHAVIOR MODIFICATION. Glenview, Ill,,, Scott, Foresman, 1975.

Mirman, R. Sales management: An effective performance system. In R. M. O'Brien, A. M. Dickinson, & M. P. Rosow (Eds.), INDUSTRIAL BEHAVIOR MODIFICATION. Pergamon Press, New York, 1982 (pp. 159-183).

Peters, T. J., & Waterman, Jr., R. H. IN SEARCH OF EXCELLENCE: LESSONS FROM AMERICA'S BEST RUN COMPANIES. New York: Harper & Row, 1982.

Woodman, R. W., & Sherwook, J. J. The role of team development in organizational effectiveness: A critical review. PSYCHOLOGICAL BULLETIN, 1980, 88, 166-186.

Legends for Tables and Figures

Table 1: Outcomes, by organization type and kind; corresponding accomplishments needed to achieve these outcomes: and behaviors targeted for change in order to achieve the latter for the various HRD projects in which we presently are (or have been) involved

Table 2: Projects in which we have installed, in various sequences and degrees of completion, manager-controlled systems. Columns respectively denote organization category and type and the respective nine systems. Material in parentheses in the body of the table include magnitude of effect traceable to the system involved or form by which the system was manifest.

Figure 1: Mean efficiency scores for two shifts of the stitching-and-sewing and one shift of the case-binding departments. Data are for periods (all at least one months of longer) (1) prior to worker knowledge of the program (baseline), (2) following introduction of measurement procedures (expectations), (3) during feedback-only (individual charts) period, (4) feedback plus manager-dispensed praise (reinforcement, stitching shifts only), and (5) after supervisor machine training was given (stitching only).

Figure 2: mean transaction points for bank tellers based upon scores given for prescribed courtesy behaviors. Each set of 12 points represents the first and last six recording days during which the respective phases (all from one to several months long) of (1) baseline recording (BLN) (2) expectations (EXPT, System 3), (3) feedback (FDBK, System 4), (4) manager praise (PRSE, System 8), (5) program withdrawal (WDWL), reinstitution of (6) feedback, and (7) praise were in operation.

Figure 3: Legally-delivered body checks, averaged across players for each of 21 games (squares) as a function of sequential introduction of manager-controlled systems, for the 1982-3 University of Notre Dame hockey team. Initial six games were recorded without player knowledge (BSLN), the next five (FB+INST) following introduction of scoring system and individual feedback (charted by game), the next four following individual goal setting (G-S), and the final six in response to coach-dispensed praise (RNFCMNT). The dashed line (+) represent win percentages for each of these respective phases.

LEVELS OF ORGANIZATIONAL ANALYSES

Organization Type	Outcome	Accomplishment	Behavior
Service			
Hotel			
Housekeeping	Increased business through better reputation	Cleaner rooms, cleaner public areas	More checkmarks on cleaning checklist
Eront Desk	Increased revenue, increased profit margin	More rooms sold, higher room rates	Upsell room features and benefits
Food & Beverage	Increased traffic, more revenue, more profit	More covers, larger checks per cover, faster service	Shorter service latencies, upsell desserts and wines, increased courtesy
Hospital			
Nursing (Peds.)	Lower payroll costs, better service	Fewer staff per shift, more effective staff	Increase no. acuity points/nurse
Medical Records	Better hospital reputation, greater hosp. usage by M.D.s	Increase communication efficiency and courtesy	Shorter latencies, inc. behav. equivalent of phone etiquette
Dietary	Fewer complaints, cost control	Uniform offerings	Portion control by weight
Housekeeping	Greater patient/M.D. confidence in hospital cleanliness	Brighter/shinier floors	Inc. checkmarks on floor-cleaning checklist
Bank(s)			
Tellers	Increase customers, accnts/ customer, decrease customer loss	Increase courtesy	Increase no. courtesy behaviors on courtesy checklist

Organization Type	Outcome	Accomplishment	Behavior
Acct. Service Reps.	Ibid., tellers, inc. retail	Increase courtesy, inc. no. services/customer	Ibid. tellers; increase cross selling activities
Call Officers	Inc. commercial revenue	Increase no. commercial sales	more contacts, better preparation/contact
Print Label	Increase revenue/profitability	More sales, more qualified quotes, more sample runs	More contacts; better prep./contacts; more followup/contact
Telemarketing	Increase revenue	More clients; more orders/client; larger orders/client	increase downtime efficiency; increase cold calls; increase call quality
Manufacturing			
Furniture			
Production	More business, better profit margin	Higher earned ratio	Increased efficiency (No. pieces vs. standard)
Office/Clerical	Lower payroll costs; better customer service	Fewer clerks; more accurate filing; fewer customer complaints	Increase checkmarks or efficiency checklist
Trucking/Shipping	Lower shipping costs	Increased efficiency	Less expensive gas; increased mpg
Sales (Indirect)	More revenue; inc. profit margin	More sales; inc. profit/sale	More qualified contacts; more pre-call preparation; more post-call follow-up
Lock-Nut	Decreased Production Costs	More pieces/hr., fewer pieces rejected	Inc. downtime efficiency, inc. sampling and guaging
Food Processing	Maintain and increase reputation	Zero foreign matter in food	Zero rejections in meat inspection tanks

Organization Type	Outcome	Accomplishment	Behavior
Food Processing Cont.	More product moved Lower production costs	Precise trim/perfect appearing product more pieces/hr less waste	Exact fat layers; no scarred areas on meat increase no. hams processed; no lean on trim
Wire Harness	Lower Production Costs	Higher earned ratio	More pieces cut and trimmed/hr
	Lower Production Costs	Higher earned ratio	more pieces terminated per hr.
	Lower Production Costs	Higher earned ratio	more harnesses completed/hr.

Table 1: Outcomes, by organization type and kind; corresponding accomplishments needed to achieve these outcomes; and behaviors targeted for change in order to achieve the latter for the various HRD projects in which we presently are involved.

Table 2
Manager-Administered Systems by Project Type

Name and Type of Organization	System 1 (Behavior Targeted)	System 2 (Measurement Proc)	System 3 (Explanation)	System 4 (Feedback)	System 5 (Coaching)	System 6 (Goal Setting)	System 7 (Meetings)	System 8 (Reinforcement)	System 9 (Perf Reviews)
Service									
Hotel									
Housekeeping	Checkmarks on checklist	proportion total ckmks awarded by supsr	Yes (30%)	Yes (charts)	Yes	Yes(Gp)	Yes	Yes (money)	
Front Desk	available rms, sold per shift	number and dollar amt	Yes	Yes (charts)	- - -	Yes (monthly budget)	yes	Yes (money)	--
Food and Beverage	customer cover charge	number items, check size	Yes	Yes (Charts)	- - -	Yes (ibid)	Yes	Yes (money)	
Hospital									
Nursing	number patient services	patient acuity points	Yes	---	---	---	---		--
Medical Records	11 different phone behavs.	points awarded thru supsr	---	---	---	---	---	---	--
Dietary Housekpng.	portion size checklist	supervisor rating proportion checkmarks		---	---	---			
Bank Tellers	11 different transaction behaviors	recorded with mics and awarded points, supsr obs. for courtesy	Yes(15%)	Yes (Charts, 15%)	Yes	Yes(Gp)	Yes	Yes(mgr. praise 15%)	
Accnt Reps	ibid tellers; mention of bank services	number offered vs. number could offer	Yes	Yes (Charts)	---		---		
UND Senior Bar	checklist cleaning activities	proportion ckmks earned	Yes	Yes(Charts, 15-100%)	Yes		---		
Airport	"	"	Yes	"	---				--
Radio Stn.	"	"	Yes	"	---				
Univ. Press	"	"	Yes	"					--
Pest Control	customers serviced	no. serviced vs. Co. Std. (self-report)	Yes	Yes(Chts, 29%)	Yes	Yes(Gp)	Yes	Yes(Praise, cookies)	Yes
CPA Firm	Time on projects	percent chargeable time	Yes	Yes(grp. chrts, 30%)	- - -				

Name and Type of Organization	System 1 (Behavior Targeted)	System 2 (Measurement Proc)	System 3 (Explanation)	System 4 (Feedback)	System 5 (Coaching)	System 6 (Goal Setting)	System 7 (Meetings)	System 8 (Reinforcement)	System 9 (Perf Reviews)
Sales									
peal Estate	"cold" and followup contracts	self-report	Yes	Yes(Charts, 200%)	---	Yes (Grp)	Yes	Yes(token economy)	---
Inn urance	asking; interviewing	self report, no. of each	Yes	Yes(75%)	Yes	Yes	---	---	---
Print label	contracts; preparations for; followups	emp. report, computer scored	Yes	Yes(40%)	---	---	---	---	---
Telemarketing	downtime activities; dialings; cold calls	self-report; computer printout	Yes, thru ppct. input	Yes(17%; 30%) 2 charts	---	---	---	---	---
Manufacturing									
Furniture	1. efficiency	1. self report	---	Yes(15-30%)	Yes	Yes(Grp)	---	Yes(Praise)	Yes
	2. clerical activities	2. ibid	---	Yes(15-70%)	---	Yes(Grp)	---	Yes(ibid)	Yes
	3. miles per gal.	3. direct ck.	---	Yes(33%)	---	Yes(Grp)	---	Yes(tangible)	Yes
	4. number sales activities	4. self report	---	Yes(-5-+31%)	---	Yes(indiv)	---	Yes(ibid)	Yes
Locknut	1. downtime activities (forming)	1. self-report	Yes(6%)	Yes	---	---	---	---	---
	2. no. gaugings (tapping)	2. self-report	Yes(30%)	---	---	---	---	---	---
Food Processing	1. scoring & fat depth	1. observation-rating	Yes(10%)	Yes	---	---	---	---	---
	2. no. hams	2. counter	Yes(10%)	Yes	---	---	---	---	---
	3. defect rating	3. observation-rating	Yes(9%)	Yes	---	---	---	---	---
	4. pieces acceptable trim	4. ibid	Yes(9%)	Yes	---	---	---	---	---
	5. no. acceptable tanks	5. ibid	Yes - -	---	---	---	---	---	---
Electrical Harnesses	1. efficiency (cut/strip)	j.. self-report	Yes	---	---	---	---	---	---
	2. ibid (terminating)	2. ibid	---	---	---	---	---	---	---
	3. ibid (harness)	3. ibid	---	---	---	---	---	---	---

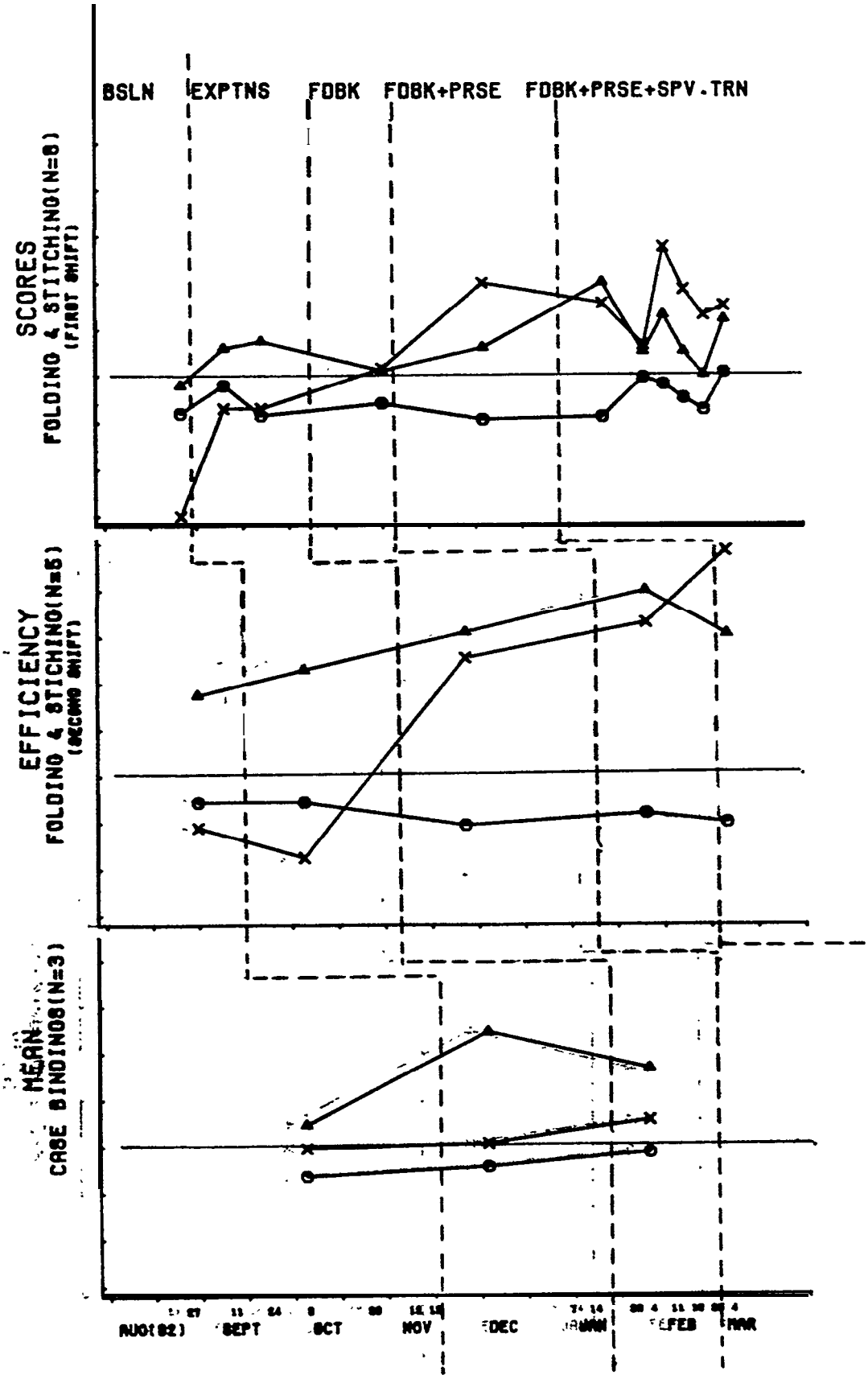
BSLN
EXPTNS
FDBK
FDBK+PRSE
FDBK+PRSE+SPV.TRN
SCORES
FOLDING & STITCHING(N=8)
(FIRST SHIFT)
EFFICIENCY
FOLDING & STICHING(N=8)
(SECOND SHIFT)
MEAN
CASE BINDINGS(N=3)
AUG(92)
SEPT
OCT
NOV
DEC
JAN
FEB
MAR

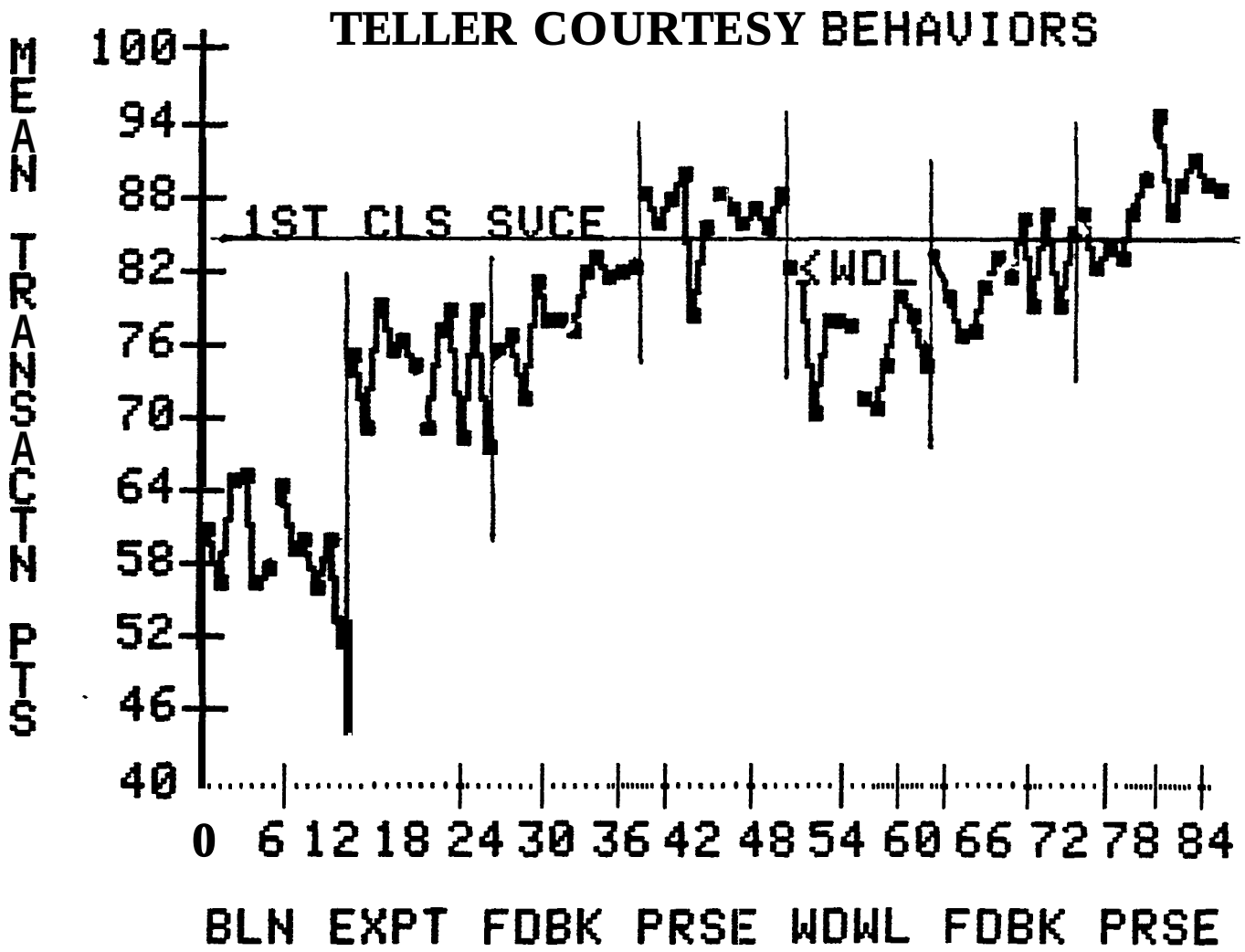
TELLER COURTESY BEHAVIORS
MEAN TRANSACTN PTS
100
94
88
82
76
70
64
58
52
46
40
1ST CLS SUCE
<WDL
0 6 12 18 24 30 36 42 48 54 60 66 72 78 84
BLN EXPT FDBK PRSE WDWL FDBK PRSE

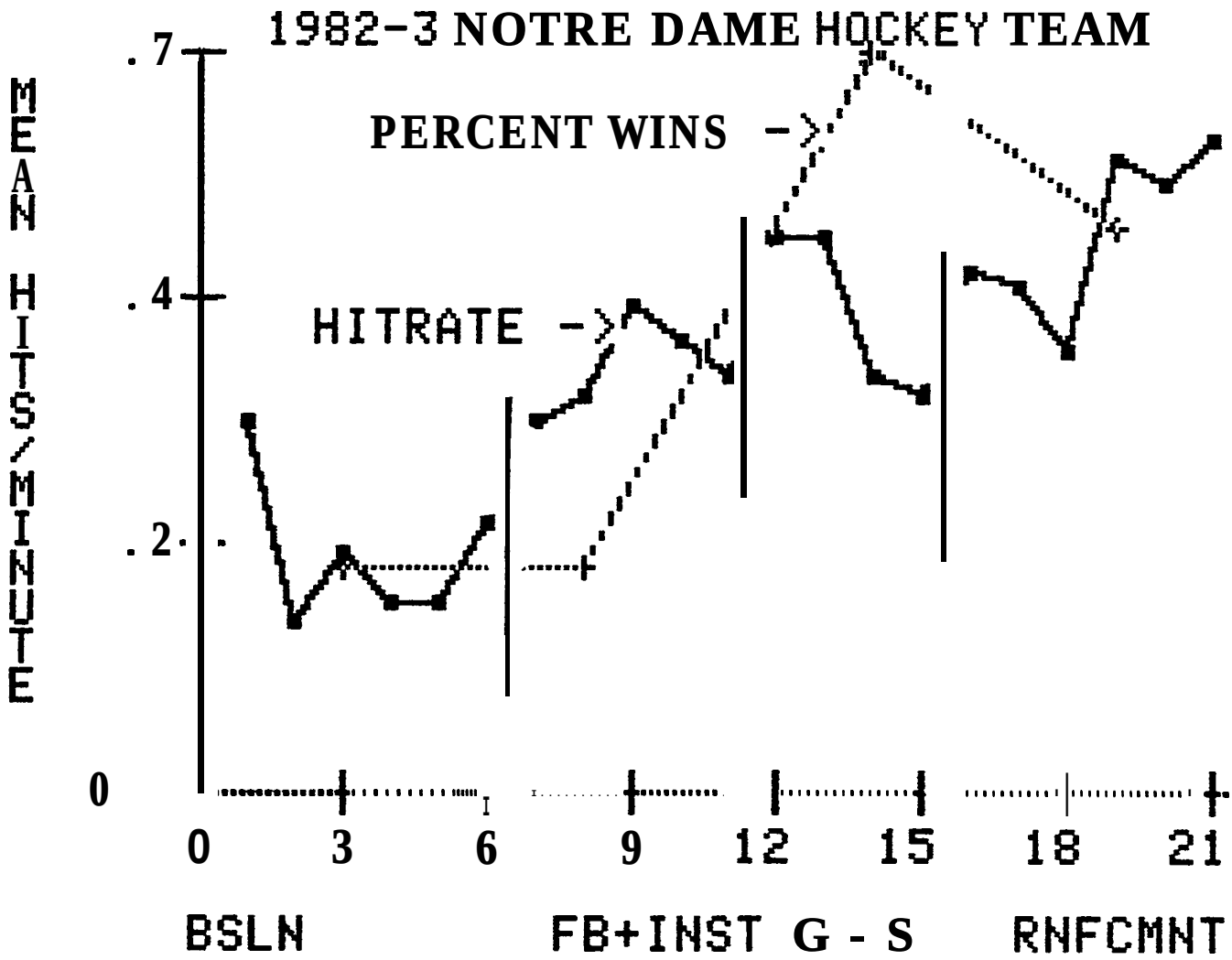
1982-3 NOTRE DAME HOCKEY TEAM
PERCENT WINS ->
HITRATE ->
MEAN HITS/MINUTE
.7
.4
.2
0
0
3
6
9
12
15
18
21
BSLN
FB+INST G - S
RNFCMNT

CAN WE EXPECT THE SHIPBUILDER/DESIGN AGENT RELATIONSHIP TO PRODUCE INEXPENSIVE HIGH PRODUCTIVITY SHIPS?

J. N. Spillane
Senior Associate
Shipbuilding Consultants, Inc.
Dickinson, TX

Mr. Spillane has been a shipbuilder for more than thirty years with early experience in Naval shipyard repair and the majority in the high technology field of submarine planning and construction. Since 1977 he has been providing consulting services to a broad variety of shipbuilders from ocean going commercial and military vessels, through offshore oil industry ships and rigs, to inland river systems barges' and towboats. Projects have included design and construction of facility expansions and total new shipyard development, personnel and financial reorganization, establishment of comprehensive management information, planning and control systems, and executive level on-the-job training.

ABSTRACT

Almost by definition, inexpensive high productivity shipbuilding hinges on the adequacy of the relationship between the shipbuilder and the design agent and the proficiency of their actions early in a new ship construction to iteratively optimize the design, the selection of materials, the production processes and the use of acquisition of facilities.

In a competitive marketplace the keystone of the design agent contract with the shipbuilder is likely to be least cost engineering particularly when prior ship owner/design agent agreements limit the scope of the agent's services. Under these typical conditions, it is unlikely that the design agent will offer or the builder will demand identification and implementation of all the minimum tasks needed to insure inexpensive ship construction.

This paper attempts to define the business incentives of the principals, the minimum features of a comprehensive design agent/builder arrangement, and some recommendations for offsetting the shortfall between them.

PROBLEM

HISTORICAL PERSPECTIVE

In mid-1973, as an outgrowth of the National Shipbuilding Research Program Annapolis Conference of January 1973, Bath Iron Works published [1] an understanding of the objectives and requirements of the Ship Producibility Research Program that included the following:

"THE TRADITIONAL DESIGN AND PRODUCTION OF U. S. BUILT SHIPS USING CONTRACT PLANS AND SPECIFICATIONS PREPARED BY THE OWNER HAS CONTRIBUTED TO THE HIGHER COST OF U. S. BUILT SHIPS.

Until the Merchant Marine Act of 1970 fixed price advertised bidding was the standard method used by U. S. subsidized operators to buy ships. Under this method, the contract design of U. S. foreign trade commercial ships was generally developed by the shipowner rather than the shipyard. The shipowner knew or cared little about efficient shipbuildng practices. He was primarily interested in what his ship would look like after delivery and how well it would perform in this particular trade route. Most ship operators had an independent design agent develop the contract plans and specifications."

"This procurement approach usually led to the following results:

- A limited number of ships built to each design with little opportunity for cost reductions through series production.

- Ship designs tailored to individual owner requirements.

- The incorporation of expensive special features or other forms of gold plating.
- Ship designs that did not consider how the ship would be built in U. S. shipyards.
- Ship designs that were not suited to the construction facilities and methods of any particular U. S. shipyard.

The above conditions significantly contributed to the higher cost of U. S. versus foreign-built ships."

My consulting experience with shipbuilders during the last six years, strongly suggests that, for the most part, these basic observations by Bath Iron Works have not changed appreciably.

Shipbuilders in general, and IREAPS participants in particular are well aware, and probably impressed by the yeoman work that is being accomplished within the industry to improve processes and standards, adopt and adapt computers to shipbuilding, invoke better planning concepts and all directed toward improving our competitive position in a tough market. We can't help but be impressed with the success stories here and elsewhere but in the fine print and between the lines is a message, and I believe that message is absolutely clear. No amount of construction technique improvement or engineering sophistication can fully offset or recover from either a design incompatible with the shipbuilders' capabilities or a scrambled program start-up.

PROBLEM

In fact, there is considerable danger that the complexities of the engineering process may cast the design in concrete before the productivity engineering can be implemented.

Even though these inconsistencies can happen just as easily and thoroughly in a corporation that designs and builds ships for its own operation, the opportunities for disaster are enhanced by the conflicting business objectives in the more typical owner, design agent, builder situation.

Since the motivations, shortcomings and problems can be more easily compared by using the latter relationship, this paper will be devoted to assessing the conditions in the owner, design agent, builder relationship which encourage excessive ship costs and will attempt a few simple improvement recommendations.

For you few CEO's and General Managers who own, operate, design and build ships in-house, never fear, you have it within your grasp to confuse the construction process just as easily without a separate design contract as the tri-partite arrangement can with a contract.

In the literature there are a few striking examples where a team has been formed by the owner, designer and builder to achieve quick and inexpensive ship construction with admirable results. Since none of us write papers about the adversary relationships between these three parties, which invariably seem to produce delayed deliveries and massive cost overruns, it seems reasonable to ask, "What is wrong with the typical owner, designer, builder arrangement?"

COMMON GOALS

Emotionally and intellectually, it is likely that the owner, designer and builder, who collaborate to design and construct a new ship, would agree in principal on a number of common goals and objectives for the shipbuilding program. In spite of this agreement, their individual perception of the meaning and intent of these goals differs.

SHIPS MUST MEET PERFORMANCE SPECS AND REGULATORY STANDARDS

Owner hopes to get lucky and acquire a ship that exceeds performance requirements.

Designer needs a clear technical margin for error in the owner's favor while demonstrating compliance with specs and specifications.
Builder tries for least cost that can meet specifications.

DELIVER SHIP ON TIME AND UNDER BUDGET

Owner expects ship delivered on time and believes that his cost exposure is protected by the terms of his design and construction contracts.

Designer hopes that the owner and builder will cooperate so that drawing issue delays can not be blamed for production cost overruns.

Builder plans for on-time and under budget delivery on a basis of "not-to-interfere" with more profitable work already in the yard.

COMMON GOALS

SHIP DESIGN COMPATIBLE WITH SHIPYARD CAPABILITIES AND CAPACITIES	Owner assumes builder's "capability" based on past history of constructing similar ships and "capacity" on the fact that builder responded to the bid solicitation. Designer assumes builder will define facility constraints but the design agent usually has little in-house experience in facility trade offs. Builder usually puts greed for more business ahead of concerns about capacity or capability and, if necessary, muddles through.
DESIGN WILL OPTIMIZE MATERIAL SELECTION	Material optimization includes least cost analysis of: timely delivery, scrap loss, lot size discounts, mill cutting cost avoidance, material size surcharges, component prepackaging, shipyard process throughout, life cost reduction, etc. Owner assumes that low bid implies optimization. Designer assumes vendor low bid implies optimization but actively pursues only plate nesting and scrap loss. Builder could, but rarely does, set up a team effort to direct an integrated solution.
DESIGN WILL BE SEQUENCED TO AVOID PRODUCTION DELAY	Owner assumes sequence and schedule will be satisfactorily coordinated by the designer and builder.

COMMON GOALS

Designer prefers a sequence which will reduce his *costs* and acquiesces to production sequences reluctantly.

Builder defers the expensive planning and production engineering associated with integrating schedules for design, procurement and production until after ship contract award and then usually provides minimally detailed schedules for design direction. This is often coupled with a drive to compress the engineering program and reduce the cost of working drawings.

DESIGN WILL OFFER INEXPENSIVE CONSTRUCTION

Owner assumes that selection of low bidder implies inexpensive construction but unfortunately he may find he has bought the least expensive "Rolls Royce" in town.

Designer's first allegiance is to the technical letter of the owner's requirements. The designer is insulated both by time and builder's inefficiencies from the realities of high cost design.

The builder's initial liability for cost lies in the industry's competitive perception of the cost implied by the [redacted]

SYMPTOMS

SYMPTOMS OF A DEFECTIVE RELATIONSHIP

As a consultant, when I survey a shipbuilding program that is floundering or foundering, I frequently encounter symptoms of a defective relationship between the designer and builder. I encounter some symptoms so frequently that it may be useful to classify them as a source for corrective action.

CONTRACT DRAWING PACKAGE WITH "HOLIDAYS"

When a builder receives a bid solicitation with a set of contract drawings and a ship specification, he makes an assumption, that if working drawings are prepared and remain consistent with these specs and drawings, then the resulting ship will meet the owner's requirements. An inordinate burden is placed on the builder if the owner, presumably in good faith, solicits bids with a contract design package that suggests that the owner's designer has not completed the basic engineering required to define the scope of the proposed ship. For example, a contract design without piping diagrams or an electrical load analysis casts doubt on the specified machinery selection and arrangement. In a competitive construction bid, the builder may recognize this as a serious shortfall, but he is also entitled to assume that any substantial defect that he uncovers during detail design will become a legitimate basis for contract change.

DRAWING PROMISE DATES vs. SCHEDULES

When the builder fails to take the lead to control the schedule for design deliverables (drawings, door and paint schedules, etc.) and depends instead on design agent "promised" issue dates for drawings, it is unlikely that production

economy will be forthcoming. Left to his own devices, the design agent is justified in sequencing his internal schedules to minimize his own costs.

Of even greater importance is the development of a design schedule defining when a design agent intends to start work on each drawing, when and what builder or owner information is required, and then records when these events actually occur so that progress can be monitored.

DRAWING LIST VACANCIES

Where a builder expects to secure working drawings from a design agent, any absence of drawings in the agent's schedule, which are essential to define a system or structural assembly, become a critical deficiency in the mutual understanding between designer and builder. In this regard we are not speaking of sketches representing minor outfit details but major groups of drawings absent from the design drawing list which reflect a disconnect in understanding of the task by the design agent. In practice we have seen design agent drawing lists with whole blocks of drawings unlisted and therefore unscheduled. When the builder's engineering department was questioned about the absences, they indicated that the missing drawings were "less important.. Of course, when the design agent delivered them, three months late, production's impression of their importance was somewhat less relaxed.

SYMPTOMS

CONSTANTLY REVISED PROMISES FOR DRAWINGS	When a survey of the monthly drawing schedule updates reveals that the so-called schedule issue date or promised issue date is being revised to show monthly delays it becomes readily apparent that either the internal management of drawing work at the designer's is out of control or that an unresolved debate is stalling the preparation of the delayed drawings. The builder can afford such foolishness only through production cost overruns.
SPECIFICATION INTERPRETATION DIFFERENCES	When we find voluminous correspondence between designer and builder, debating the meaning and application of a particular contract specification it suggests that either the spec lacks precision or that both parties have mislead themselves into believing that procrastination is to their benefit.
REGULATORY AGENCY REJECTIONS	When a builder produces working drawings approved by the owner's design agent which are regularly rejected by one of the regulatory agencies, it is time for the owner to suspect specification or contract design deficiencies or a breakdown in the agent/builder relationship.
EXCESSIVE DRAWING REVISIONS	Frequently excessive quantity of revisions on drawings is merely the result of a capricious owner's whims and desires. Where this situation does not exist it hints at several untidy problems between designer and builder. One of the more painful occurs when an owner's agent uses his working drawing approval authority to attempt to secure design upgrade not implicit in the contract design.

The converse can also occur if the builder's drawing practice is substantially more austere than the design agent feels is necessary for control of the product.

Additionally, the need for multiple revisions can reflect a serious out-of-sequence drawing development program. None of the above produce construction economy.

NO SCHEDULE FOR PURCHASE SPECIFICATIONS

Typically a builder will create some form of schedule defining when he requires drawings and material for production. Less frequently, but still fairly common is a material ordering schedule based on procurement lead times backed off from the material required in yard dates. When a design agent retains responsibility for development of some purchase specifications it is much less common to find that a planning effort has been concluded which will control when these purchase specifications must be prepared to insure that not only will the equipment be available to support production but that vendor technical information will be available to avoid drawing delays.

NO VENDOR DETAIL SCHEDULES

Purchase contracts placed by either a design agent or a shipbuilder regularly require the vendor to confirm his promised material delivery date. Although almost all designers and builders have consistently experienced serious delays of drawings and the frustration of modules which are incompletely pre-outfitted because vendor information could not be made available in time, rarely do they require this information as a scheduled item in the purchase

SYMPTOMS

order. It is not surprising, then, how often the excuse for drawing delays is lack of vendor information. These delays are so ubiquitous that they might almost be classed as the industry-wide technical "cop-out!"

INCENTIVES

Now that we have gained some insight into the very different perceptions that each party (owner, designer, builder) may have of common goals and objectives and further have explored some of the symptoms a consultant finds regularly in an unsatisfactory working arrangement, we must try to uncover the roots of the problem.

DIFFERING FINANCIAL AND EMOTIONAL INCENTIVES

I would suggest that the principal difficulty lies in the very different emotional and financial incentives and motivations each party has for reaching the common goals.

For example, the builder expects the designer to produce a drawing package with maximum lucidity and minimum trade-to-trade conflict, on schedule and in a sequence totally geared to the builder's fabrication and installation sequence. On the contrary the designer may find it advantageous to produce drawings to a very different sequence to satisfy his internal information needs and certainly he can benefit economically by providing the least drawing information which will satisfy the letter of the technical specification.

EXPECTATIONS FOR THE DESIGN AGENT

Similarly both the owner in his contract design and the builder when he contracts for working drawings expects the design agent to operate in a competitive least cost environment. Rarely the owner, and infrequently the builder, will supplement the design agent's contract to require extensive producibility studies and material optimization.

INCENTIVES

ɔST AVOIDANCE
ISINCENTIVE

Even though both the owner and builder expect an inexpensive ship, they are playing with a stacked deck of cards called the contract design and neither one agrees that he ought to "ante-up" for cost avoidance, planning and engineering.

WEAKNESSES

Against a background of inconsistent economic incentives, there remain some other fairly typical shortcomings in both the design agent's and the builder's organizations which militate against easy resoltuion of their relationship.

DESIGNER'S WEAKNESSES:

DEPENDENCE ON SHIPYARD GUIDELINES

The designer depends to a great degree on producibility guidelines provided by the builder. In most small and medium sized (and even some large sized) shipyards, there is no formally organized group dedicated to clarifying these guidelines and in most yards the know-how is vested in a handful of senior executives who are far too busy with daily firedrills to take time for the continuous iteration process required to work out economical ship details and construction processes.

DESIGNER'S LIMITED FACILITY EXPERIENCE

When a design agent works regularly with a specific shipbuilder, his staff may become sufficiently familiar with the builder's capacity, capability, and processes to bias a ship design toward easy high producibility. More often the builder has not been selected when the design agent is making critical conceptual and contract design decisions. Additionally, the design agent's staff may be lacking in personnel who are experienced and current in state-of-the-art producibility and facilities engineering and without pressure from the builder, the designer has little incentive to meddle in the builder's province.

WEAKNESSES

1More than seven years ago, the National Shipbuilding Research Program published an excellent report [2] demonstrating the producibility advantages of shipbuilder/designer cooperation during concept design. The designer alone cannot compensate for this cooperative effort.

CONTRACT DESIGN MAY DEFINE AN EXPENSIVE SHIP

As discussed earlier, the design agent who is retained by the owner is under pressure to produce a contract design for a price and by a deadline, that primarily will meet performance, operating and regulatory requirements. Particularly, if the builder is unknown, the designer has little incentive to pursue producibility optimization.

PRODUCTION SCHEDULES PRECLUDE OPTIMIZATION

An owner with a fixed contract delivery date in mind regularly negotiates a price with the builder for ship delivery to-that date. With either a design agent or an in-house design department, the incentive is to produce drawings quickly to meet production start-up with shipyard producibility as an after thought.

SHIPBUILDER'S WEAKNESSES:

DEPENDENCY ON DESIGN AGENTS

Except for perhaps a dozen of the largest American shipbuilders, few shipyards maintain an in-house design staff with both the capacity and capability to handle all the ship design workload of the yard. This forces dependency for creating ship designs that are inexpensive to construct onto subcontracted design agents which, as we have already seen, have other primary incentives.

WEAKNESSES

INEXPERIENCED PLANT ENGINEERING STAFF

The pattern in most American shipyards is one of slow evolutionary facility growth resulting today in many yards poorly arranged and not particularly well equipped and certainly not adapted to optimize productivity for the next program to be bid. With most new facilities being acquired only when something wears out or the existing use bursts at the seams, it is unusual to find an in-house facility staff with in-depth experience in facility modernization.

Similarly it is unusual to find senior production executives in the yard who have lived through any quantity or variety of facility expansion programs. With this level of staffing it is small wonder that productivity research usually starts after working drawings are in-hand and is confined to process improvement.

ZONE OUTFIT KNOW-HOW DOES NOT COME FROM LOW VOLUME PROGRAMS

Construction contracts for a few ships rarely generate enough profit to encourage the large engineering investment required for high productivity zone outfitting. Certainly, cases have been described in the literature of successful zone outfit applied to a single or a few ships, but these cases generally describe large or expensive ships which independently supported a heavy engineering effort. In the vast majority of small to medium sized yards we do not find staffs comfortable with zone outfit planning. When we do, more often than not their outfit planning ingenuity is constrained by a bias inherent in the contract design or design agent schedules which do not

WEAKNESSES

offer sufficently early information to allow zone outfit without ship delay.

SCHEDULE PRESSURES

The last schedule date to be eased by 'the owner is the ship contract delivery date. Despite many insidious delays and procrastinations on the part of the owner and designer, the shipbuilder's program offers the last hope of recovery. The owner's drive to hold this date militates against an orderly construction start-up and producibility often takes a back seat to expediency.

,OW BID PROCUREMENT

The guide lines [l] for the Ship Producibility Research Program extolled the merits of negotiated procurements, but today, ten years later, the competitive fixed price bid is easily in the majority. Builder's primary incentive is to hold price and delivery. Obviously producibility techniques can enhance a competitive bid, but when time is short, and it almost always is, enthusiasm for producibility investigation wanes rapidly.

PROGRAM PLAN

PROGRAM PLANNING

A program master plan ostensibly relates the major activities in a shipbuilding program in a dependent relationship and to a calendar time frame. Figure 1 depicts a very crude Program Plan in bar chart form with just a hint of prerequisite dependencies. Implicit in this type of plan depiction is the assumption that no follow-on activity will compromise an earlier decision. When it does we set up an iterative process which generally forces re-engineering and results in some activities being delayed. A program plan that makes no provision for these iterations is defective and misleading.

Although the plan shown in Figure 1 may seem typical, it is replete with iteration traps. Citing just a few:

MODULARIZATION

Modularization after contract design can uncover serious costly errors in 'plate straking, machinery location, piping configuration, etc.

STEEL ORDERING

If steel ordering is optimized through N.C. lofting, it becomes very difficult to negotiate for best steel prices and still meet very early structural fabrication goals.

VENDOR INFORMATION

Vendor furnished information (VFI) needed to accurately define modules, resolve pipe sub-assembly details, and maximize structural assembly fabrication is unlikely to be available in time. Although zone outfitting can offer con-

struction economies inherently' it requires VFI relatively earlier in the program. This can be accomplished by trading engineering time for construction time, but many feel that it also requires a shipyard management with ironclad nerves to shorten the construction span.

Perhaps a better understanding of the engineering process can offer hope for an elegant solution.

PROGRAM MASTER PLAN

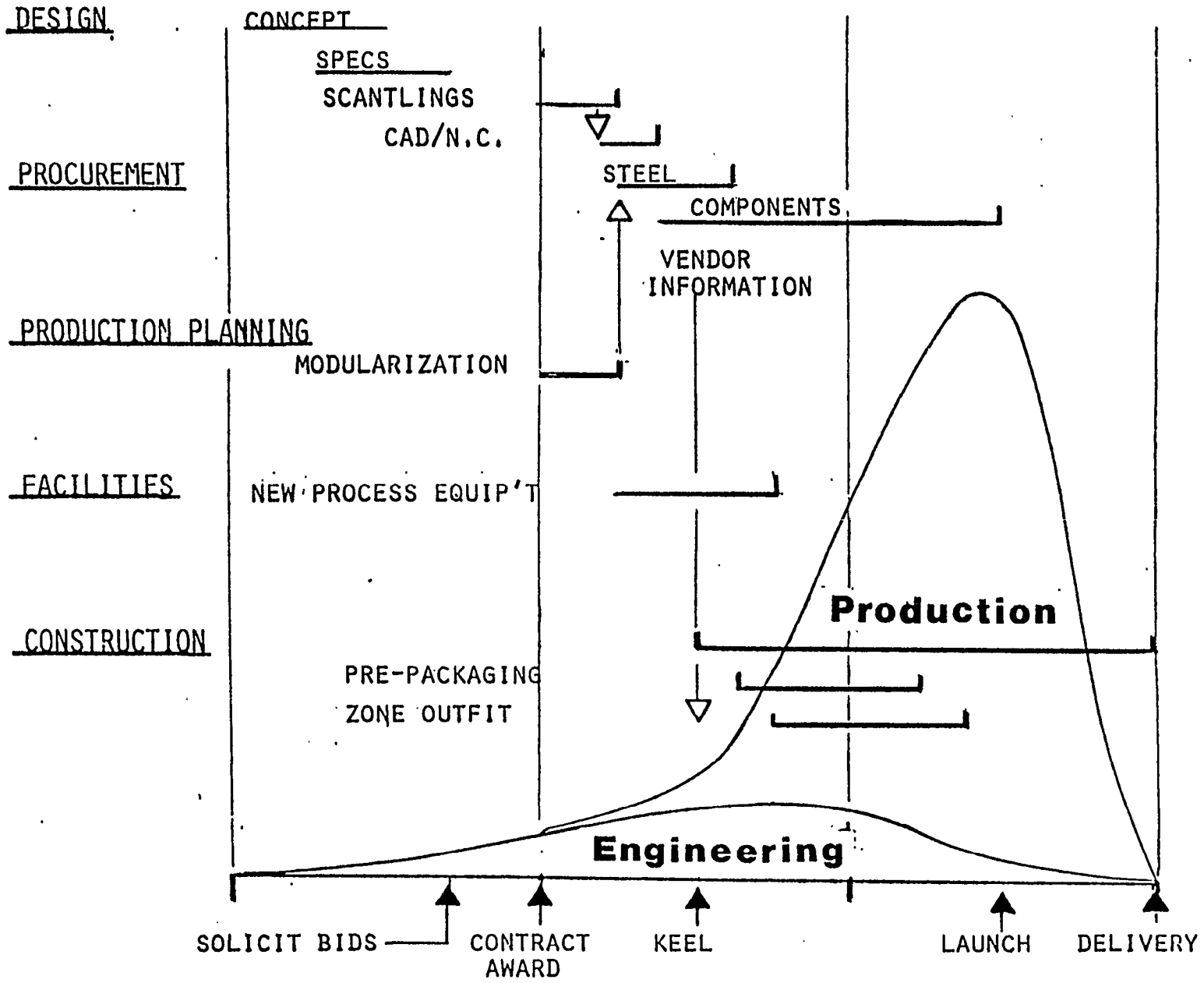

FIGURE 1

ITERATION

JOY OF CREATION; FRUSTRATION OF COMPROMISE

Any naval architect or marine engineer with reasonable longevity in the profession has both enjoyed the pleasures of creating an elegant new ship design and suffered the frustrations of the incessant compromises and attendant re-engineering inherent in balancing speed, power, weight, space, function, etc. The iterations consume much manpower and extend calendar periods, albeit absolutely necessary if economical ship construction is to be achieved. When the iterative compromises are extended to include demands for optimized material selection not only for price but to maximize production capacity and that new facilities acquisitions be sized to ship configuration, the frustrations undergo an order-of-magnitude increase.

Unless the builder specifically insists that the design agent absorb the latter optimizations and incorporate adequate time in his package to allow these further iterations to occur, it is unlikely that a rational naval architect will indulge his masochism to the extent necessary to resolve the compromises.

Particularly in those cases where the ship design is to be put out for bid by several builders, it should be obvious that the design cannot be optimized completely until the builder is selected.

Ideally, the owner, designer, and constructor would create a team during the earliest conceptual design deliberations to avoid those expensive design features which eventually result in procurement and construction overruns.

ITERATION

Although it is in the owner's interest to demand such an arrangement, it is rarely done particularly if competitive bids are to be solicited for working drawings and ship construction. In practice, the very process of seeking competitive bids encourages both the detail designer and ship builder to interpret the ship specification as narrowly as possible to enable a lowest cost bid to be made. Usually, significant dialogue on productivity is possible only after the builder is selected.

PRE-AWARD DESIGN BIAS

From the very outset of a new ship program, iterations, trade-offs and compromises take place continuously not only at the grand conceptual level but almost subconsciously at very detailed levels. How easy it is to bias the design when a senior structural engineer remembers (?) that Builder "C" can only lift hull blocks to 20 tons; and the material estimator is sure (?) that least steel costs occur with 78" wide plates, and the marine engineer convinces the owner that the best (?) engine is from "Grossen Machinen Fabriken" even though he hasn't devised a scheme for transporting and landing 800 tons in one chunk at anybody's yard. How much more difficult it is to seek skilled compromises when the builder is not yet known or, if he has been selected, is too busy to provide the talent and time to work them out. Later the owner and builder will have plenty of time to pray that the designer is telepathic.

ITERATION

MIS-PERCEPTIONS IN ACTION

Let's outline a few of the typical traps and disconnects we have seen in the last few years by reference to Figure 2.

We see an owner who assumes his design agent will create an inexpensive ship although it should be apparent that the ship specification will be biased toward some expensive construction characteristics without builder interaction.

We see a designer who, regardless of cost, must produce a design that meets codes, cargo capacity, speed and fuel rates whether or not it will be inexpensive for the builder. In the concept stage he commits plate widths, frame orientation, compartment boundaries and machinery arrangements that almost totally limit the options for zone outfit, modularization, prepackaging and material cost avoidance.

The owner and designer may make the easy assumption that three builders in the same product line will have the same capability. We see schematically how several builders might review a hull 'block"; that is one sees a major hull block module, another a stick built assembly, and the third, an A.B.C. block present for the baby. Apocryphal, yes! But the application of shipbuilding "standards" assumes commonality of yard capability which does not exist.

The contract drawings and specification attempt to pass the conceptual design on to the builder. Whatever construction

biases are included in the contract design, if several builders are engaged in competitive bidding for the ships, their only reliable response to an incompatible design is to increase their price. Requests for substantial redesign at this stage of the contract automatically increase the owner's engineering costs and delay construction start-up.

ITERATION IN PRODUCTION

To emphasize how costly some of the designers decisions are, we can briefly consider some of those areas that are presently targeted for productivity improvement by our societies and in papers, #here at IREAPS (see Figure 3). It is not that these areas don't need improvement, it is just that simple conceptual decisions can have a profound effect on production costs and that sometimes the importance of these decisions to the builder can get lost in the drive to simplify the designer's problems. For example:

a). Plate straking and shell/deck plate thickness variation dramatically effect the throughput of plate processing equipment such as flame planers, N.C. burning machines, and plate or panel stiffening machines. A variation of shell thickness in a side shell panel can prevent automated panel stiffening.

b) Framing orientation in shell, decks and bulkheads for both hull and houses may predetermine whether automated panel stiffening can be applied and incidentally can

MIS-PERCEPTION IN ACTION

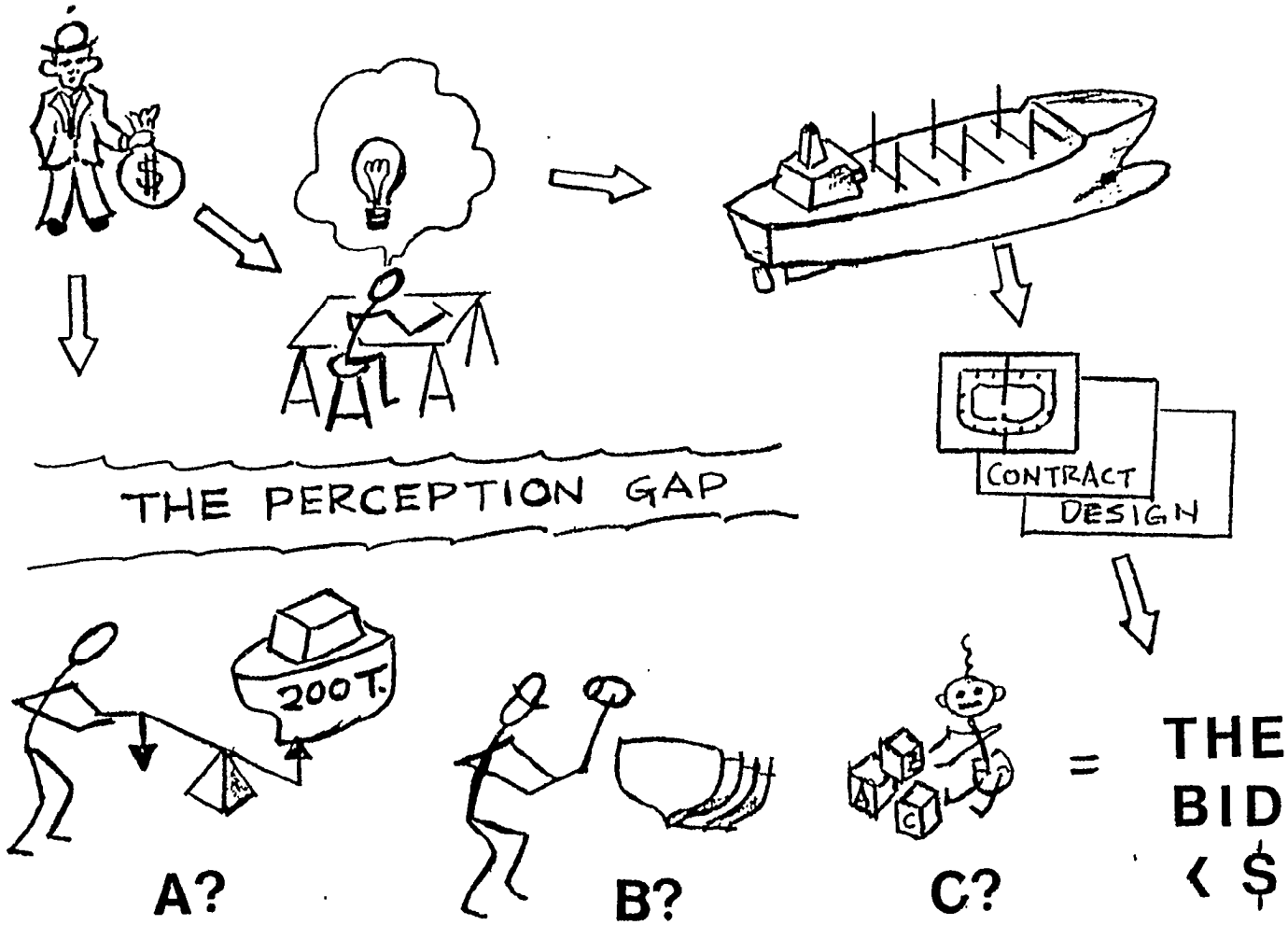

FIGURE 2

ITERATION IN PRODUCTION

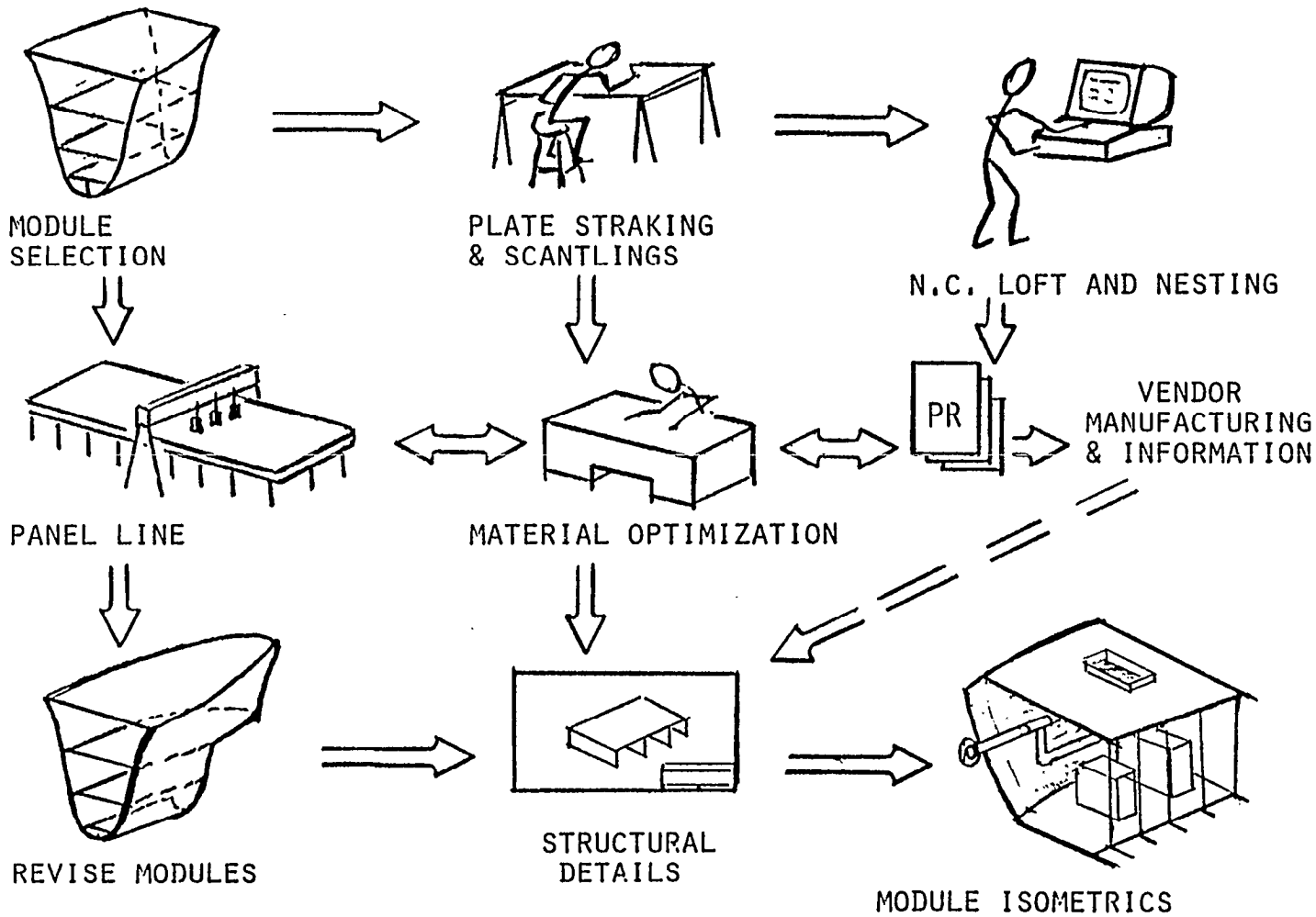

FIGURE 3

compromise deck house and hull modularization.

c) Although aesthetically pleasing, a non-functional dedication to faired curves in plating precludes or limits the benefits from automated flat panel stiffening.

d) Even the selection of plate width for flat panel work requires an iterative analysis since at the very least, flat plate processing costs are controlled by -

- bed widths in processing machines and burning tables
- steel industry surcharges on plate widths
- panel seam and buttweld costs
- plate dimensional tolerances as they affect trimming and fitting costs.

For instance, in a very primitive case, a plate shop can lose nearly 50% throughput in a panel line geared for 12 foot wide burning machines if 78 inch rather than 72 inch plates are specified.

e) In the selection of the intersection details between upper decks and deckhouse side shells, bulkheads and trunks, the designer has initially made a decision which radically affects the size, shape and quantity of stiffened flat plate and panels which can be

automatically processed. Without considerable insight into the steel processing machinery presently at, or planned for, the several builder's yards, it is virtually impossible for the designer to develop the optimum economic solution.

f) Similarly, in our experience, most deck detailing regularly assumes "stick" building on a platen or jig. It is easy for the designers to go this route since they may be treating deck details such as trunk and stairwell openings and component deck loads on an individual basis and not even at the same time. This readily results in considerable variety in section and angular orientation of underdeck stiffening. Opportunities for the 50 to 70% cost reductions seen from automated panel. stiffening are seldom realized.

g) Another facet to structural detailing lies in the availability of steel mill cutting of structural shapes to precise length for no additional or modest cost only. This usually applies to shapes more than twenty feet in length. Since no shipyard can weld splice shapes this cheaply and normally can't burn or cut to length as cheaply as a mill, this places an obligation on the designer to consolidate shape lengths to take advantage of this savings, which leads us inevitably to N.C. lofting and plate nesting.

ITERATION

h) Many excellent studies have been made in recent years of computerized lofting and the nesting of flat plate parts for burning. Clearly a tremendous amount of conceptual design, scantling selection and general arrangement has to be complete to allow the numerically controlled systems (Autokon, Spades, SPS, et al) to do their best. By the time this evolution is undertaken, we are deep into the program calendar. When this iteration is conducted principally between the naval architect and the N.C. lofting group we exclude all those construction considerations which ultimately reduce scrap loss, require fewer field welds and lead to more nearly complete hull assembly blocks. Since nesting optimization by computer is normally done for a single ship unit, the additional economies inherent in multi-ship programs are rarely attempted. In a recent program we found nearly a 10% plate savings by re-consolidating nesting at the shop level in a multi-ship program. This is not a criticism of the designer/N.C. lofting relationship but rather a recognition, that, if we want the maximum savings from the process, we will have to accept a second generation production engineering step which may require that the computer lofting program be exercized again before fabrication proceeds.

3-D OUTFIT

A final consideration is related to 'the impact of component selection and arrangement as it relates to zone outfit and equipment prepackaging. I would hazard an opinion that after outright delays, errors and changes in the design, that misfits, absence of tolerances and mis-alignments of all kinds may be the next greatest contributor to increased production costs. In Figure 4, we can see graphically that any component in a module or any module that will interconnect with another presumes a three dimensional boundary. Any element that will interconnect across this boundary enjoys the classic six degrees of freedom (i.e. three axes, plus roll, pitch and yaw) and requires an envelope of tolerances if an easy interconnection fit is anticipated. Certainly, production personnel deal with this contingency all the time through "make up joints", "field welds" and "cut-to-suit" connections. No knowledgeable shipbuilder would defend these solutions as the least expensive technique. Whenever the designer elects to extend inter-modular connections through more than one axial boundary, he multiplies the constructors grief. All of the current effort directed toward shipbuilding standards can be nullified if we do not exact a requirement for inter-modular tolerances before we install detailed system standards.

Even such routine actions as selection of components with piping connections, not only inboard and outboard but up and down and fore and aft, introduce extra dimensions and compound the tolerance interactions in pre-package or zone

3-D OUTFIT

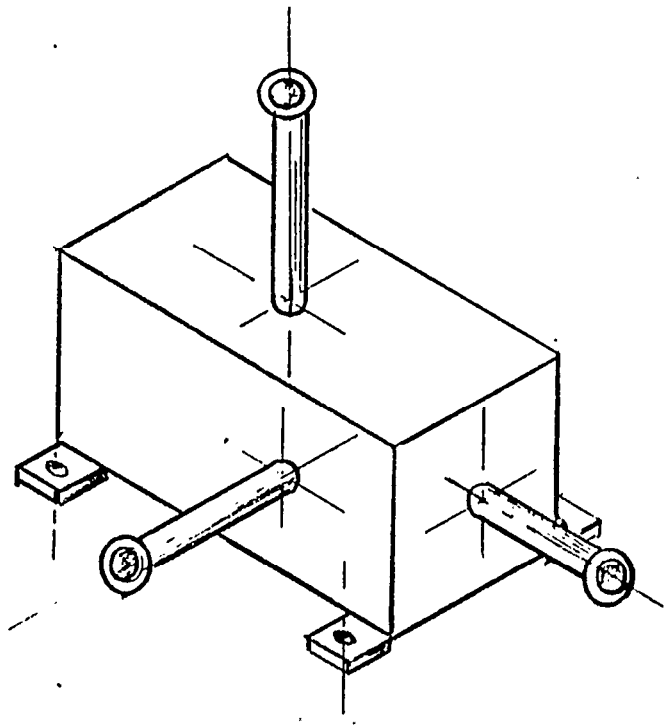

CHAOS IN 3 PLANES

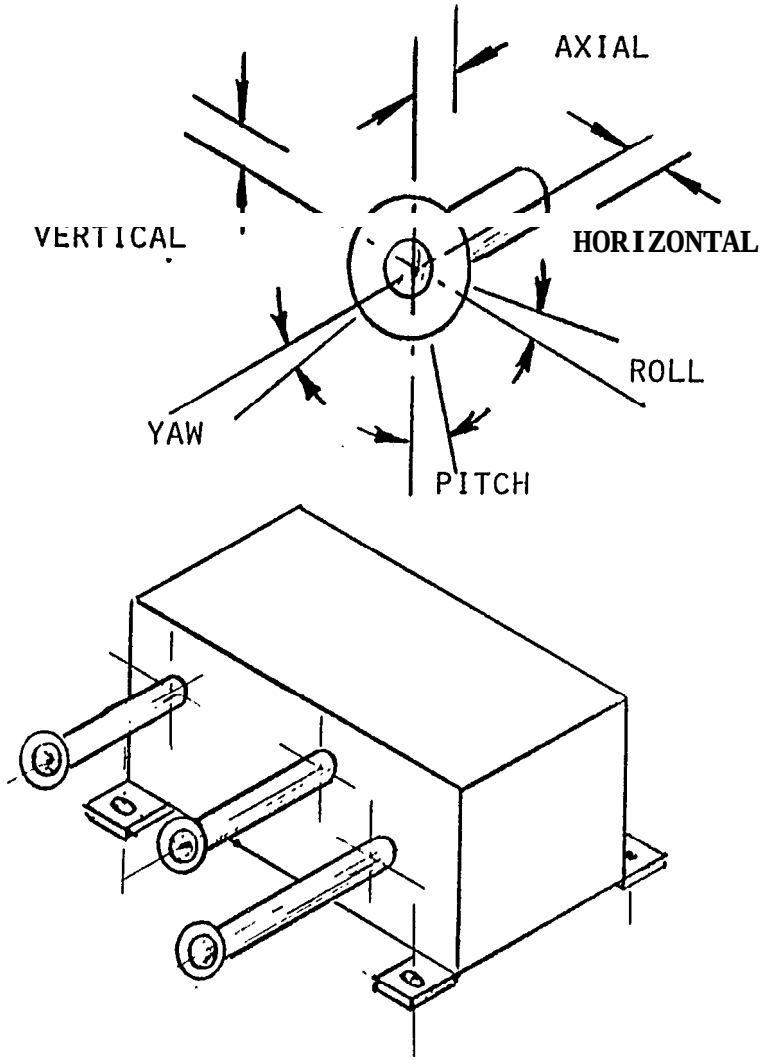

UTOPIA IN ONE PLANE

FIGURE 4

outfit situations. Although Utopia may be beyond our grasp, we should still look to the designer to reduce the number of axes that piping extends from a module. Further, he can recognize that component foundations interconnect via structure, while components interconnect via piping (and occasionally mechanical linkages). If we are to reduce the cost of field fit-up, then the designer must provide compatible tolerancing and common control dimensions to the inter-connecting structural and piping systems.

ACTIONS

WHERE DO WE LOOK FOR IMPROVEMENT?

If we can agree, at least in part, that the cost of building ships in the U.S. is being compromised by an unsatisfying arrangment between owner, design agent or builder, then where do we look for improvement? Of course, I could make the presumptuous assumption that the IREAPS Proceedings for 1983 would be read by every ship owner who would miraculously digest this paper, and immediately crusade for a perfect contract and communication between designer and builder. This would also require owner's who never fritter away program time while procrastinating on design agent selection or redirect the designers or delay the builders start-up while insisting on the original ship delivery date. But in the real world, owner's have their problems and delays as does every other party in the ship program.

In the following paragraphs we will briefly explore those minimum conditions that each of the particpants should not only insist on from the others but demand of their own operations if better building costs are to be achieved and finally we will offer a suggestion for MaRad, SNAME, IREAPS action that would accelerate the industry toward improved conditions.

OWNER ACTIONS

First, for the owner, we would remind that in the broadest sense and with rare exception, all the real costs of the designer and builder are ultimately borne by the owner. Any comfort that the owner gets from lowest design and construction bids will be destroyed if he allows the designer to pass

inconsistent specifications on to the builder in hopes of encouraging low construction bids.

INTEGRATED DESIGN BEFORE BID SOLICITATION

For his own protection, the owner must ensure that the, principal parameters of the design are integrated and limited by the design agent before they are passed on to the builder for preparation of working drawings. Although "caveat emptor" can easily be invoked by the designer and builder, it certainly seems in order to recommend that shipowners and their trade associations press the professional societies (IREAPS, Shipbuilders Council, SNAME) and Mar Ad for the development of minimum criteria for a contract design and a ship specification, perhaps tailored for different vessel classes.

ALLOW TIME FOR PRODUCTION ENGINEERING

As the financier of a new ship program, the owner is in a unique position to use time to protect his investment but all too often instead of using time to reduce costs, pursues a single dimensional objective with a fixed ship delivery date as the only goal.

RECOGNIZE THAT OVERRUNS CAN EXCEED ITC'S

This is not surprising nor unique to shipbuilders what with investment tax incentives enhancing deliveries close to fiscal year end and high interest rates militating against any lengthening of the program. But as consultants, when we see 100% manhour overruns being unnecessarily experienced then the small ITC and interest gains pale into insignificance. The simple fact is that no amount of production genius can fully

recover from poorly sequenced engineering and designs incompatible with in expensive construction methods.

PRESS FOR INDUSTRY-WIDE ONSENSUS CONTRACTS AND SPECIFICATIONS

In today's environment, where each owner and design agent invents his own contract agreement and specification, the door is opened wide for shipbuilder confusion and interpretation. The owners should press the National Shipbuilding Research Program and the professional societies to create industry-wide consensus contract forms and ship specifications.

INCORPORATE A SELECTED BUILDER IN THE CONCEPTUAL DESIGN TEAM

All of the attention the industry is applying to shipbuilding standards, computer aided design and manufacturing, and process improvements assume that the owner and designer will get their act together and that the builder will be positioned to conduct modern construction processes in an orderly fashion. How many of you can candidly claim that the first few ships in any prototype program you have struggled with have met this simple criteria? Yet, it seems inconceivable that the owner's do not militantly demand that the stage be set before the play begins.

Perhaps the least expensive insurance an owner can buy would be to have his design agent research a study of ship programs similar to the one planned, comparing original schedule and actual performance. When the almost inevitable delays occur during the conceptual design stage, whether through owner procrastination, difficulty in pulling the funding package together, surprises

in engineering trade-offs and estimates, or whatever, the owner must review these basic schedule comparisons and realistically decide whether to delay ship construction start-up until he has assurance that both ship design and production engineering are resolved. Unfortunately, both his designer and prospective builder may well have in-house conflicts which oppose a program stretch out., The design agent may have counted on releasing engineers to a follow=-on design project and the builder' has craftsmen standing by. Although both the builder and designer can be aware of the cost impact of a haphazard start, they may be reluctant to reveal their fears without some financial relief,

My reaction as a consultant is similar to the TV commercial that says "Pay me now or pay me later" with the clear implication that later is worse and more expensive,

ENGINEERING COST LEVERAGE

Figure 5 shows a typical ocean going ship program with a first year devoted to conceptual and contract design, acquisition of funding, bid solicitation and builder selection and a nominal two years for detail design and construction, Overlaid on the schedule are cost curves for engineering, in all its aspects, and production. As an industry we must remain dedicated to the reduction of both curves but the significance of this picture lies in reminding the owner that schedule recovery from counter-productive designs is bought at roughly ten times the cost of better preliminary planning and engineering.

ENGINEERING COST LEVERAGE

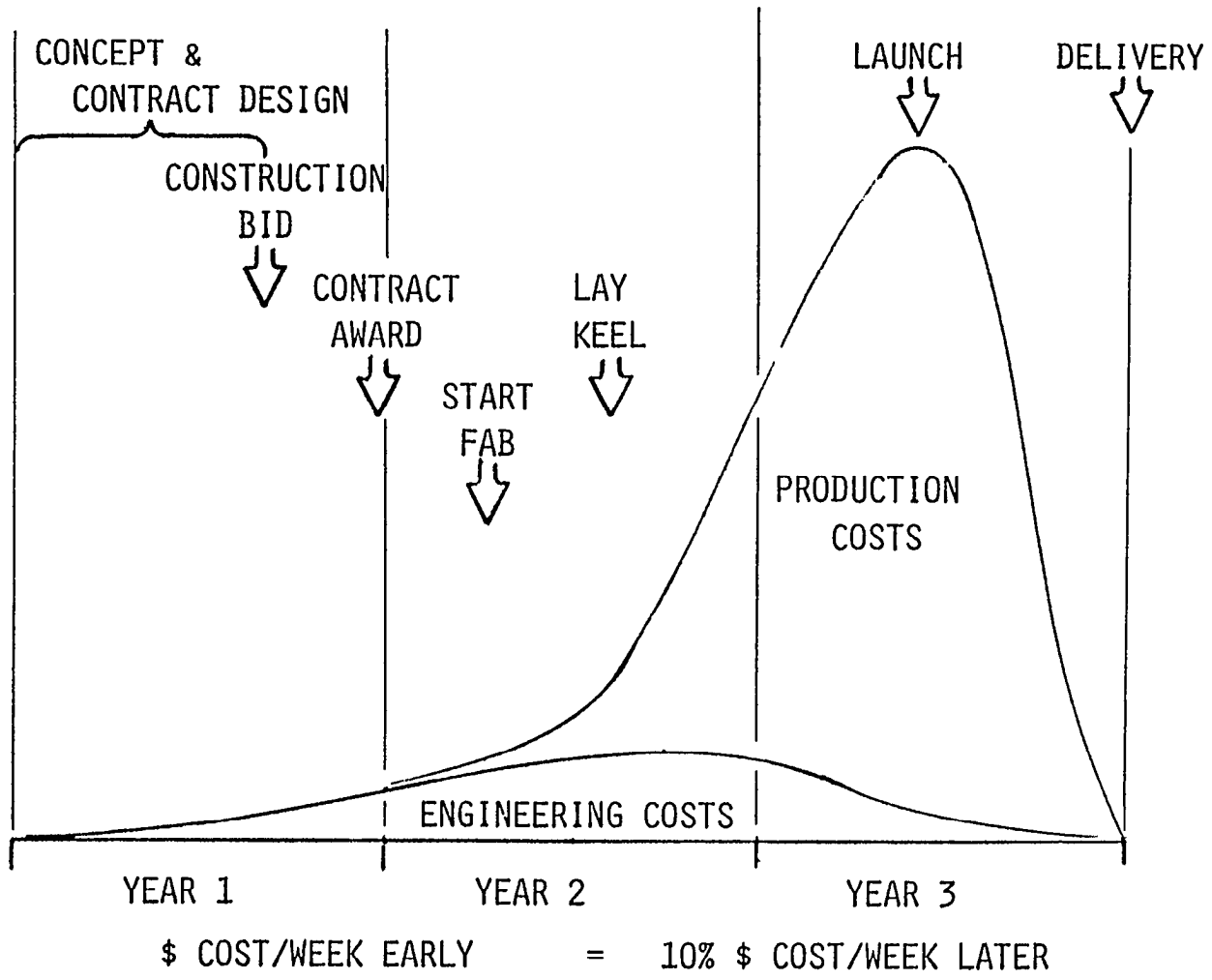

FIGURE 5

ACTIONS

DESIGN AGENT ACTIONS: AN ETHICAL OBLIGATION TO CONSISTENT DESIGN

The design agent's obligation to excellence in productivity design is constrained by the owner's perception of what the design agent has to produce and a necessity to act somewhat competitively against other agents' bids. If the owner has compromised his own schedule through procrastination, the agent may well be suffering a severe time compression which does not encourage elaboration and embellishment of the engineering task. Yet, professional ethics would suggest that the agent has an obligation to the owner to insure that the features of the design are in balance and that significant engineering compromise decisions are not being passed to the builder without the owner (and builder) in clear agreement that a subsequent decision on unfinished engineering features could destroy the integrity of the agent's work.

One example: recently we investigated production delays and cost overruns in a multi-ship ocean service program. Many of the production problems were traceable to an owner's contract design that did not include piping diagrams or even a preliminary electrical load analysis. The ship specification had been modified to pass the responsibility for piping and electrical engineering (and other less important features) on to the builder. The absence of these critical areas in the contract design patently casts serious doubt on the consistency and adequacy of the design agent's engineering, machinery arrangements and scantlings. Subsequent decisions in the piping and electrical areas forced much rearrangement and reversal of procurement actions.

Whether the owner actively allowed this technical faux pas to go forward or merely misunderstood the significance of these omissions is debatable and will no doubt be resolved through awe somely expensive litigation. What is clear, is that the design agent should have refused to be party to an incomplete contract design.

PID SPEC RESOLUTION OCESS WITH BUILDER

When disputed specification or contract interpretations arise, which they inevitably do, the design agent must insist that an interpretation be agreed on in a matter of a few days avoiding at all costs the time consuming back and forth letter writing badinage that usually transpires. Even when the outcome eventually results in a contract extra for the builder, it is virtually impossible to equitably assess the cost and time impact on the program from a long delayed resolution.

OID A "PUT IT ON THE TAB" NDROME

Design agent procrastination over spec interpretation becomes especially insidious in those cases where the design agent is also the owner's inspector. The design agent can easily set the stage for significant production delay and disruption while remaining confident that his adamantly held interpretation will be reinforced by the owner. Concurrently the builder may stall or misdirect production confident that he can not be expected to revise his interpretation of the spec without a visible contract change. This sublime sitation often continues until. the owner in desperation makes a command decision

coupled with a deferral of financial accountability by directing the builder to proceed as directed and "put it on the tab!" for later cost resolution.

Although this tactic is widely practiced it rarely seems to assist in the clarification of the specification. We can suggest that any spec dispute be adjudicated within a couple of weeks by a tripartite owner/designer/builder team with the owner preconditioned to extra engineering costs at the front end to avoid builder delay and disruption claims later.

BUILDER'S ACTIONS:

Patently the builder who is reviewing numerous contract specifications and bid solicitations feels he can neither afford the expense nor devote the time necessary to uncover the production traps buried in an unintegrated design. In practice the amount of data provided by the owner's design agent for bidding may easily camouflage design inconsistencies. Nonetheless, the builder often suspects that he has in hand a defective design and if he is to avoid disastrous cost exposure, he should either demand and get design clarification or introduce a disclaimer in the contract for downstream re-engineering and construction impact.

REJECT SPECS THAT PASS ON ESSENTIAL ENGINEERING

There are certainly occasions when the builder can provide engineering services to complete the detailing of the ship but the builder should avoid any engineering responsibility where the results can compromise the basic engineering already accomplished by the

ACTIONS

design agent if for no other reason than that the builder then becomes part of the design problem rather than a solution.

DRAWING SCHEDULE COMPATIBLE WITH PRODUCTION

Since the reality of construction mandates that a builder can only survive with design deliverables that support his schedules for start of prefabrication, sub-assembly, component prepackaging and zone outfit he must either negotiate such a schedule with the design agent or secure owner deferral of construction until the designer can produce. Any other course is self-destructive.

ENDOR INFORMATION SCHEDULE HAT SUPPORTS ZONE OUTFIT ND DRAWING SCHEDULE

The need for vendor information at very early dates to complement zone outfitting and pre-packaging decisions, may force elements of structural, mechanical, electrical, and piping design to be completed out-of-sequence with the production requirements for a completed drawing.

For example, a small in-tank piping assembly may be required weeks or even months earlier than the remaining piping in the same system in an abutting compartment. To insure that the designer understands that the builder may need the same technical information to support radically different production requirements, it is incumbent on the builder to create a separate schedule for vendor information requirements.

ACTIONS

RAPID SPEC RESOLUTION PROCESS

With a construction contract in hand and a design agent acting as the owner's inspector and construction drawing approval agency, the builder should insist that an owner, designer, builder specification resolution committee be set up to provide rapid arbitration of interpretation disputes. The committee members must be able to commit their sponsor for cost liability. Too often, spec interpretation disputes fester for weeks and months while delays mount or production proceeds without mutual agreement often ending only in contract claim litigation. This path cannot produce inexpensive ships.

WHERE CAN IREAPS, SNAME, MARAD, NAVY AND TRADE ASSOCIATIONS HELP?

From the foregoing you may easily infer that although I find the considerable efforts of IREAPS and its associates commendable, too often it seems that, as an industry, we are engrossed in process and technique improvements while we condone sloppy relationships between owner, designer and builder during concept design which vitiate any hope for inexpensive construction.

In this regard we might profit from the experience of another architectural group, the American Institute of Architects (AIA).

SPONSOR A STANDARD AGREEMENT FORM

I would suggest that we sponsor the development of a "Standard Form of Agreement Between Owner and Architect" similar to those in use by AIA [3]. This task could be assigned to the SP-4 Design/Production Integration panel. There is considerable evidence that the AIA's agreements have not only stood the

test of time, in this case over 65 years, but have been constantly modernized and have proven beneficial to both owner's and architects.

CREATE SHIP CLASS CONSENUS SPECIFICATION

The bewildering variety of contract specifications, even for ships in the same class and service, only serves to confirm that as an industry we must prefer to confuse each other rather than take time to codify and agree to use a common terminology and definition of our many repetitive practices. The progressive work of the SP-6 Standards panel can ultimately become effective only when there is some minimum commonality of communication between owner and architect when a solicitation for bids refers to a companion ship specification and contract drawings.

Here again the societies and agencies could sponsor a project either through SP-4 or SP-6 to create minimum acceptable specifications and lists of required contract drawings to insure an "integrated design envelope for major ship classes. This would require extensive shipbuilder cooperation but eventually should markedly reduce bid evaluation cost for all parties.

ET UP AN INSTITUTE FOR SPECIFICATION GENERATION

If we are not too proud to plagiarize a successful operation, we might look to AIA and the leadership role they have played in generating building specifications with nationwide acceptance. There is no doubt in my mind that the output of the SP-6 and ASTM F-25 panels can minimize confusion on specific technical details but the thrust of this

paper is to direct the same level of expertise to the scope sections of contract specifications to achieve a common comprehension between owners, designers and builders. I submit this commonality does not presently exist and is at the heart of the confused owner, designer, builder relationship.

SPECIFICATION APPEALS BOARD

Currently when a dispute arises between shipowner, architect or builder concerning interpretation of specifications or inconsistent application of regulatory agency standards, there is no authority accepted by all parties to whom we can appeal for judgment. It is my understanding that such a board of appeals exists successfully in the building construction industry. This board exists through the sponsorship and support of owners, architects, builders and manufacturers but does provide interpretation resolution within one month and avoids those unending spec debates so common in the ship building industry. Admittedly creation of such a board may not be feasible until we can develop consensus specs but the concept is worthy of an SP-4 Project to define a program implementation plan for its eventual establishment.

MAINTAIN AN ON-GOING PRODUCIBILITY FORUM

Other than at IREAPS, the only regular forum for shipbuilding producibility innovation and review has been through the SNAME annual and section meetings. Even a cursory review of the SNAME as a forum will quickly demonstrate that its historical focus has been concentrated on the scientific discipline of ship design with less than one percent of its

papers dedicated to shipbuilding production and producibility. This is not particularly surprising but since hardly any shipbuilder in America can confidently proclaim that he regularly enjoys the luxury of drawing and designs once, right and on time it is obvious that our industry must expend the effort to correct the faulty keystone in our construction programs. I feel absolutely certain, that under one banner or another, we must have a public forum to tweak our conscience and focus our cost saving energies.

CONCLUSIONS

Although the proclaimed goal of the Ship Producibility program is to move away from sealed bids to negotiated contracts and to encourage full cooperation during ship conceptual design between the owner, the designer and the builder, we are a long way from achieving this goal as an industry--wide practice, Until we do the breakdown in the relationship between these three parties we will continue to create ships that are expensive to build but awarded to the low bidder.

This paper proposes that IREAPS and the related shipbuilding societies and agencies take a stronger role in standardizing and clarifying the present haphazard contract specification and pre-award production engineering agreements to establish a sound baseline for application of the many exciting techniques and processes now being developed to enhance producibility,

Accuracy Control for U.S. Shipyards

Richard Lee Storch, Research Assistant Professor
John R. Gribskov, Research Assistant
Ocean Engineering Program
Department of Mechanical Engineering
University of Washington
Seattle, Washington

Dr. Storch has established and heads the shipbuilding studies center at the University of Washington. It includes a research program, continuing education courses in shipbuilding and a newly established shipbuilding industrial engineering undergraduate degree program. Dr. Storch had ten years experience as a naval architect in government and industry prior to his initial employment at the University of Washington in 1978. He holds a B.S. from Webb Institute of Naval Architecture, an M.S. from M.I.T. and a Ph.D. from the University of Washington.

Abstract

Research conducted by University of Washington personnel at Tacoma Boatbuilding Company (TBC) has provided a basis for any U.S. shipyard to initiate and operate an accuracy control system. This paper discusses the steps necessary for initiation of such a system and then outlines, in case study format, the practical aspects of accuracy control planning, execution (measuring) and evaluation (analysis). Examples of vital point selection, planning sheets, check sheets, normal distributions of variation determination and control chart development are presented. A discussion of the long term value of an accuracy control system is also included. The results presented are based on actual on-site research at TBC, involving the construction of the stern section of hulls one and two of the U.S. Navy T-AGOS vessels.

Acknowledgement

The results presented here largely reflect the results of research sponsored by the U.S. Department of Transportation, Maritime Administration, University Research Program, whose support is gratefully acknowledged.

References

This paper provides a synthesis and summary of the three reports listed below. The author will not continuously reference these documents but recommends them to readers interested in more detail concerning this topic.

(1) Chirillo, L. D., "Process Analysis Via Accuracy Control," U.S. Department of Transportation, Maritime Administration, February 1982.

(2) Storch, R. L., "Improving Accuracy Control While Employing Zone Outfitting in Shipyards," U.S. Department of Transportation, Maritime Administration, March 1982.

(3) Storch, R. L. and Gribskov, J. R., "Accuracy Control: A Guide to its Application in U.S. Shipyards," U.S. Department of Transportation, Maritime Administration, February 1983.

Accuracy Control: General Overview

Accuracy Control can be defined as:

> The use of statistical techniques to monitor, control and continuously improve shipbuilding design details and work methods so as to maximize productivity.

It involves the regulation of accuracy as a management technique for improving the productivity of the entire shipbuilding system by focusing attention on individual areas where improvements offer significant benefits. When fully operational, accuracy control forms a major part of a complete management system.

An Accuracy Control system can be considered to have two primary goals, one short term and one long term. The short term goal is to monitor the construction of interim products to minimize delays and rework during erection. The more important long term goal is the establishment of a management system that permits the development of quantitative information that can be used to continuously improve productivity.

Viewed as a complete system, Accuracy Control includes three major parts: (1) planning, (2) executing and (3) evaluating (see Fig. 1). The results of the evaluation are then used to help plan for future work. Each of these parts is important, but by their nature they will receive different emphasis during startup at an American shipyard. Additionally, the goals of each part as viewed individually during initial application may appear to be only marginally related. Consequently, upper level management must maintain a clear understanding of the eventual integration of each part, as well as the long range goal of the complete Accuracy Control system.

The effectiveness of an accuracy control program is directly dependent upon the application of Group Technology to ship production, i.e. the use of a Product-oriented Work Breakdown Structure (PWBS). The underlying assumption in the collection and analysis of A/C data is that production processes are (at least initially) in a state of statistical control. This in turn requires well-defined work processes, procedures and coding so that observed variations can be validly interpreted using statistical theory. A Group Technology approach to shipbuilding implies a clear definition of the various work processes employed at a given yard, and these definitions become the basis of standardization. It is this standardization and the repeatability of processes that comes with it, which makes application of accuracy control techniques possible and the resulting process useful. In the absence of Group Technology/PWBS, such effort is useless.

The second prerequisite to full-scale implementation of accuracy control is the establishment of an accuracy control data base. This data base is nothing more than a statistical history of the accuracy of the work processes employed at the yard. It is a quantitative measure of normal performance at every work station employed at a shipyard as part of the shipbuilding process. Its preparation takes time, and although some short-term benefits may accrue from this effort, it is primarily a preliminary task to lay the groundwork for effective implementation of an A/C system. It is a capital investment aimed at improving productivity of the yard over the long term. Like all capital investments, it requires a firm commitment from top level management.

The data base, once established, serves two purposes. First, it provides the basis of standards for individual work processes. The statistical distribution of variations may be used in conjunction with sampling and control charts to signal

FIGURE 1

Accuracy Control Cycle

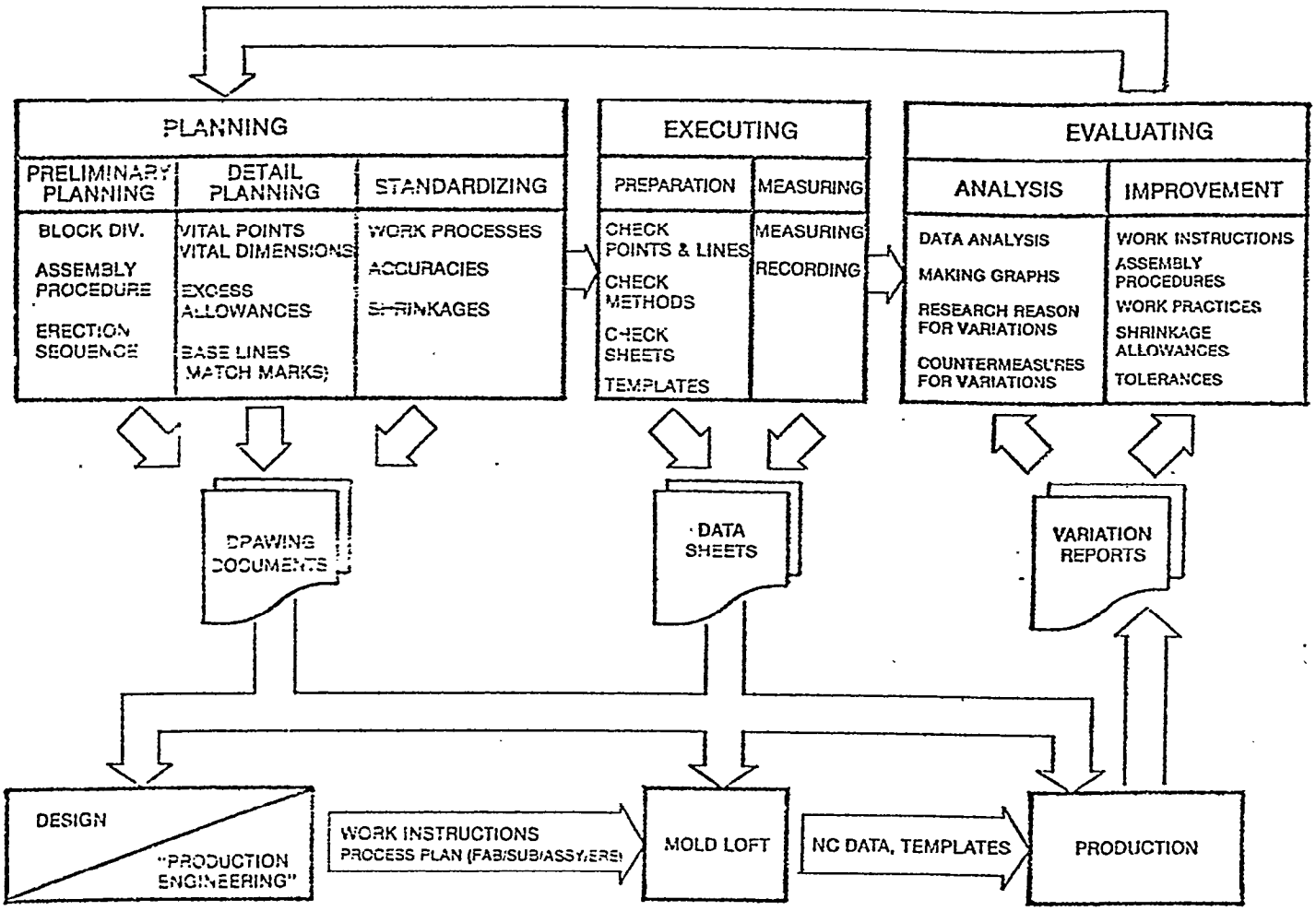

when work processes are out of control and require correction. Second, the data base provides the information necessary to begin process analysis, the major benefit to be obtained from an accuracy control system. The objective of process analysis is productivity improvement--cutting costs, improving quality, and shortening lead times--simultaneously, rather than at the expense of each other. In fact the impact of alterations of any work process on the overall production process can be predicted and analyzed employing the A/C data base.

Briefly, accuracy control planning prepares for accuracy work to be performed on a specific shipbuilding project. A/C executing is the actual work involved, including development of specific check sheets and methods and the measuring. and recording of data. Evaluating, or the analysis phase of A/C, closes the feedback control loop in the ship production process and provides documentation for use in planning, executing and evaluating the next shipbuilding project. By its very nature, it imparts learning to the shipyard (not individuals), to be maintained and reused on future work.

Startup of an Accuracy Control System

The startup procedure for Accuracy Control can be summarized by the following 9 steps:

1. Commitment to PWBS and Accuracy Control by top management.

2. Choice of construction project for initiation of system.

3. Informational meetings involving engineering, planning, shop and trades foremen, N/C loft, quality assurance and welding engineers.

4. Establishment of written assembly and welding sequences by engineering based on input from planning and production.

5. Establishment of initial (estimated) tolerance limits by engineering based on input from planning and production.

6. Establishment of initial (estimated) excess standards by N/C loft based on input from planning, production and engineering.

7. Development of check sheets to identify check points and dimensions for measurement by engineering based on input from planning and production.

8. Collection of data on check sheets and review of assembly and welding sequences by production.

9. Analysis of data and sequences by Accuracy Control group.

Establishing an Accuracy Control system at *a* shipyard involves an understanding of the short and long term goals of Accuracy Control. It must also be based on the existing organizational structure. As discussed previously, they the short range goal of monitoring construction of interim products to minimize delays and rework during erection is a relatively straight-forward, less important part of the total system. Nevertheless, for these and other reasons, it is likely to be the first area addressed by a shipyard beginning Accuracy Control. The temptation to ignore or delay initiation of the long term system is strong. A necessary ingredient is a strong willed upper management, willing to provide the necessary

time and funds to establish Accuracy Control.

The system cannot be effective until a large data base has been collected and analyzed. Essentially these data indicate the statistical trends of construction performance at each problem area in a yard operating under a PWBS. This indicates the initial difficulty. Most shipyards will begin to address Accuracy Control in conjunction with the initiation of a PWBS system, being driven by the desire to minimize rework at erection. Consequently, statistical performance determination by problem area may not be possible, since construction by problem area is only just being implemented, and is probably only partially accomplished.

In some regards, this changing work environment can provide top management with an opportunity to begin data collection at a relatively low level of effort. Middle managers involved in production are likely to grasp quickly the need for achieving and assuring accuracy in iterim products. Of less obvious importance will be the need for documentation and analysis. The requirement for this critical part of an Accuracy Control system must come unequivocally from top management.

Getting a system started requires careful consideration of the idiosyncracies of a particular shipyard, including its organization, people, facilities, work Of utmost importance is a commitment by top management to PWBS and Accuracy 'Control, coupled with an understanding that under favorable conditions it may take five to ten years for significant returns to be realized. A moderately stable work load for a number of years is certainly an important part of such favorable conditions.

Given the commitment and work load, an initial step would be the choice of an upcoming construction project for preliminary implementation. This will establish a sense of urgency, initially in engineering and production planning and then in production itself. This choice should be made far enough in advance to permit the earlier phases to be accomplished prior to the crush of actual construction deadlines. A large amount of pre-construction work, primarily by engineering, is required and ample time and manpower is essential.

If the decision to implement Accuracy Control is made in conjunction with a move to PWBS, the workload placed on the engineering and planning departments will rise dramatically. PWBS requires much of the detail design and production planning to be completed prior to the initiation of construction. In addition to the new zone orientation faced by engineers and planners, a large amount of new written information will be required by the Accuracy Control system. Included among these data requirements are assembly and welding sequences, tolerance limits, excess standards and check sheets and dimensions. These requirements are also stacked at the early end of the construction cycle, prior to the actual start of construction. Consequently, the lead time allowed for this major undertaking should not be underestimated.

As design and production planning begin, it will be useful to begin a series of meetings involving representatives from the two organizations most impacted, engineering and planning, as well as representatives from each of the trades (at the foreman level). Also included should be representatives from N/C loft, quality assurance and welding engineers. The original purpose of these meetings is informational. Discussion should include PWBS (including zone outfitting) and the impact of and the need for the short term Accuracy Control system. An important consideration will be the need to establish check points and dimensions for accuracy, tolerance limits, excess standards, welding sequences, and assembly sequences. Stress should be placed on the fact that these will be followed and should therefore reflect what production feels is reasonable and obtainable. Input

to initial attempts at establishing these factors must therefore be solicited from production and discussed with engineering and planning representatives. Consideration of the specific construction project for which PWBS will be initially implemented will provide a focused discussion. These factors must be written by engineering and planning and then applied by production. Production must understand that changes or problems must be documented and resolved with engineering and planning, permitting an upgrading of the validity of these factors with time.

The iterative nature and the time span required to achieve a working Accuracy Control system must be made clear. The difficulty of initiating such a system yardwide at one time is apparent. Consequently, a choice of one or more specific areas to be addressed will ease startup and eventually facilitate transition throughout the yard. Steel work is a likely early choice, considering fabrication and assembly of simple structures such as double bottoms, wing tanks, holds, etc. Movement to outfit intensive blocks should follow based on the results of initial attempts. Discussion at the informational meetings should be slowly focused to indicate this general direction. With time, responsibilities for accomplishing specific tasks within this overall framework must be assigned. Smaller working subgroups, including representatives of affected areas, should become natural outgrowths of this process. These working groups will develop the initial sequences, tolerance limits, excess standards and check sheets. As these factors are developed for a few specific problem areas within the PWBS, the individuals with primary responsibility (engineering or N/C loft) will gain added insight that should enable the development of additional factors with fewer and shorter meetings.

Tolerance limits and standards for excess must be initially estimated and included on work instructions and/or working drawings. As time passes and data are collected and analyzed, they will be revised and refined. As the data base grows, its use as a management tool will be possible.

Prior to the initial data measuring, the establishment of written procedures detailing assembly sequences and welding sequences must be prepared. Without setting and following standard procedures, statistical data can be of little significance in indicating normal variations of work performance. The determination of assembly procedures by engineering and planning as a part of design will be useful in informing designers of production sequences and potential problems. Since these procedures should be determined based on input from production and planning personnel, the vital interaction process between those three components (engineering, planning, production) will be be initiated.

Check sheets form the basis of the data collection system. These sheets provide the format for establishing performance levels and therefore are a critical check on tolerance determined initially by estimation. Additionally, check sheets for sub-assemblies and blocks will provide information necessary for establishing standards for excess and sequences for using these excesses (i.e. time to cut neat).

Actual data collection should become a normal part of production and the responsibility of production. A typical system might involve unrecorded measurements by each worker, followed by recorded measurements by the leadman (supervisor of up to 8 workers) and then by his immediate supervisor. Here again the system most amenable to a particular shipyard should be adopted, but data recording should become a normal part of production. Allowance for the time required to check work and then to measure and record data must be made by production planning and/or scheduling to permit this system to function. This time

should be reflected as part of the work order.

These measurements serve multiple functions. They assure that the short term Accuracy Control goal of minimum rework at erection is accomplished. Consequently, one set of measurements should follow an interim product through its work stages. Measurements and established tolerance limits preclude the arbitrary accumulation of variations, since work not verified as acceptable cannot be passed on to later work stages. The data also provide statistical performance indicators, for incorporation in the Accuracy Control management scheme. Therefore, one set of measurements is delivered to the Accuracy Control analysis group, for inclusion in the mean and standard deviation determination of performance at a given work stage. Additional copies of the data may be used by quality assurance to satisfy customer, regulatory body and classification society requirements. A related but critical value of the worker checks and the measurement and recording of data is the clear indication of top management's commitment to accuracy and the ability of the worker to take pride in achieving clearly stated accuracy requirements in interim products for which he is responsible.

Analysis of data, review of assembly and welding sequences, and handling of other accuracy problems as they appear is an extremely important part of the Accuracy Control system. These functions, essentially a part of the feedback loop, hold the key to achieving positive returns on the investment in an Accuracy Control system.

A/C Planning

Accuracy control planning consists of three parts--preliminary planning, detail planning, and standards development, as shown in Fig. 1. Accuracy control planning work must be closely coordinated with design and engineering work, with planning for production control, and with certain aspects of purchasing from outside vendors. A/C planning may therefore work best if viewed as a normal part of these functions, rather than as a separate activity. This will place an additional workload on those departments and they will require some additional staff or time to handle the increase.

The close liaison required between design, engineering, planning, production control and purchasing departments, which traditionally act quite independently, will not easily flourish if A/C planning is seen as the responsibility of a separate, independent group. Liaison can be encouraged by adding A/C planning responsibilities to traditional planning responsibilities.

This method of organization has several benefits. First, by avoiding creation of a totally separate accuracy control group, the tendency to confuse accuracy control and quality control may be reduced--accuracy control is part of everyone's job. Second, the liaison required can be accomplished with a minimum of paperwork because AC planners will be in the shipyard departments with which they must coordinate their work. Finally, this method of organization lends weight to the idea that accuracy control is an integral part of all aspects of shipbuilding.

The accuracy control planning process must necessarily begin with a set of standards which specify the desired dimensional accuracy of the completed ship and its components. Such standards may come from regulatory agencies. Alternatively, special requirements may be negotiated with a customer, based on a knowledge of the costs of specifying additional accuracy, provided such information is available. Providing the information necessary for development of shipyard accuracy standards for interim products and for analysis of the costs of specifying additional

accuracy is one of the functions of the analysis phase of accuracy control work.

In the absence of data on normally achieved variations in fabrication processes, standards must initially be based on experience, rules of thumb, operational requirements, and estimation of reasonable tolerances. As data are collected and analyzed during the normal course of accuracy control work, accuracy standards can be revised, refined, and extended to additional areas. Development and refinement of these standards is an accuracy control planning function. Accuracy standards) should be based on statistical knowledge of achievable levels of variation. Periodic revision of these standards based on analysis of past performance represents an investment of the yard's experience in the organization, as opposed to having that experience reside solely in individual employees.

Analysis and revision of accuracy standards also facilitate movement toward "design for production." Alternate work procedures, assembly sequences, or hull division schemes can be evaluated and the necessary changes incorporated into the design. Tight standards for earlier stages of construction facilitate productivity of later stages and allow margins to be reduced or eliminated.

Assuming that accuracy standards for the completed hull already exist, the first task of the A/C planning group is selection of vital points and baselines for the hull as a whole. The particular points and baselines selected for measurement during construction will vary according to ship type, applicable standards, zone of the ship, problem area of fabrication (flat vs. curved block, etc.), and state of construction. Therefore, only the main hull points and baselines can be selected in the early stages of fabrication.

Vital points must be chosen which reflect all accuracy requirements involved in the fabrication of the ship and its components. Fig. 2 lists the types of vital points and baselines, gives examples of each, and lists the considerations involved in their selection. Vital points for blocks, sub-assemblies and parts can only be selected following definition of the blocking and erection plans and assembly sequences. Process related measurements can only be selected for well-defined processes. Therefore, the A/C planning must proceed in phase with the design, engineering and planning work, as shown in Fig. 3. When a yard is already employing a product-oriented work breakdown structure and has established standards for assembly sequences and work processes, much of the vital point selection process would be routine.

The next task of the A/C planning process is to specify the desired accuracy of the vital point dimensions. These specifications will be based on standards and special customer or operating requirements. In the case of non-standard requirements, specification of the required accuracy of vital points will impact the design, engineering and planning processes. For standard items, i.e. those for which normally achieved accuracy is sufficient, standard or normal design features and fabrication methods would be used. This need to distinguish between standard and non-standard items, based upon required accuracy, again points up the need to establish an A/C data base.

Accuracy control planning group members should be familiar with all aspects of shipbuilding, and in particular with the fabrication, assembly and erection methods used at that yard. The design and planning for items which have special accuracy requirements make use of that experience: The A/C planning group will review accuracy standards in light of normally achievable performance, based on information provided by the A/C analysis group. The A/C planning group may suggest revisions to shipbuilding standards prepared by regulatory agencies on the same basis.

FIGURE 2. SELECTION OF VITAL POINTS

TYPE OF VITAL CHECK POINTS OR BASELINES	EXAMPLES	WHY THESE MEASUREMENTS ARE IMPORTANT
CHARACTERISTIC HULL DIMENSIONS	1. straightness and level of hull baseline 2. length, draft, breadth of various points 3. hull volume--offsets at chine or bilges 4. tonnage/tankage measurements	1. satisfy regulatory bodies 2. establish capacity/tonnage 3. quality assurance to customer 4. feedback to yard--A/C analysis 5. feedback to standards organizations--modify standards 6. affect erection productivity
DIMENSIONS RELATED TO OPERATING REQUIREMENTS	1. relative position of stern tube, shaft bearings, engine foundation and rudder post 2. location/alignment of special components--ro-ro ramps, gun mounts, etc. 3. special customer requirements	1. affect performance, operation of vessel 2. feedback to yard--A/C analysis 3. feedback to standards agency 4. affect productivity of component installation 5. satisfy special customer requirements
MAJOR STRUCTURAL INTERSECTIONS AT BUTT JOINTS	1. shell plate offsets at butt 2. chine offsets 3. locations of major bulkheads 4. large structural foundations--location, flatness	1. affect strength, rework requirements, deformation during fabrication 2. feedback to yard--A/C analysis 3. feedback to standards agency 4. affect fabrication productivity
OUTFIT COMPONENT INTERSECTIONS AT BUTT JOINTS	1. pipe ends which mate to another component on adjoining unit 2. machinery components mating to component on another unit 3. pipe penetration locations	1. affect proper operation of machinery 2. affect productivity of zone outfitting 3. feedback to yard--A/C analysis 4. feedback to standards agency
PROCESS RELATED MEASUREMENTS	1. fitup gaps 2. welding shrinkage 3. welding distortion 4. bending accuracy 5. line heating 6. cutting, marking accuracy 7. curvature of components fabricated on pin jig	1. assist determination of process accuracy 2. affect productivity of subsequent processes 3. feedback to yard process evaluation 4. feedback to standards agency
MEASUREMENTS TO FACILITATE FABRICATION	1. platen level 2. jig alignment/accuracy 3. building dock baseline alignment 4. baselines on parts, blocks to facilitate measurement, alignment assembly outfit, painting and erection	1. assist fabrication 2. affect productivity 3. feedback to yard--A/C analysis of alternative methods/processes

FIGURE 3

Accuracy Control Planning Process

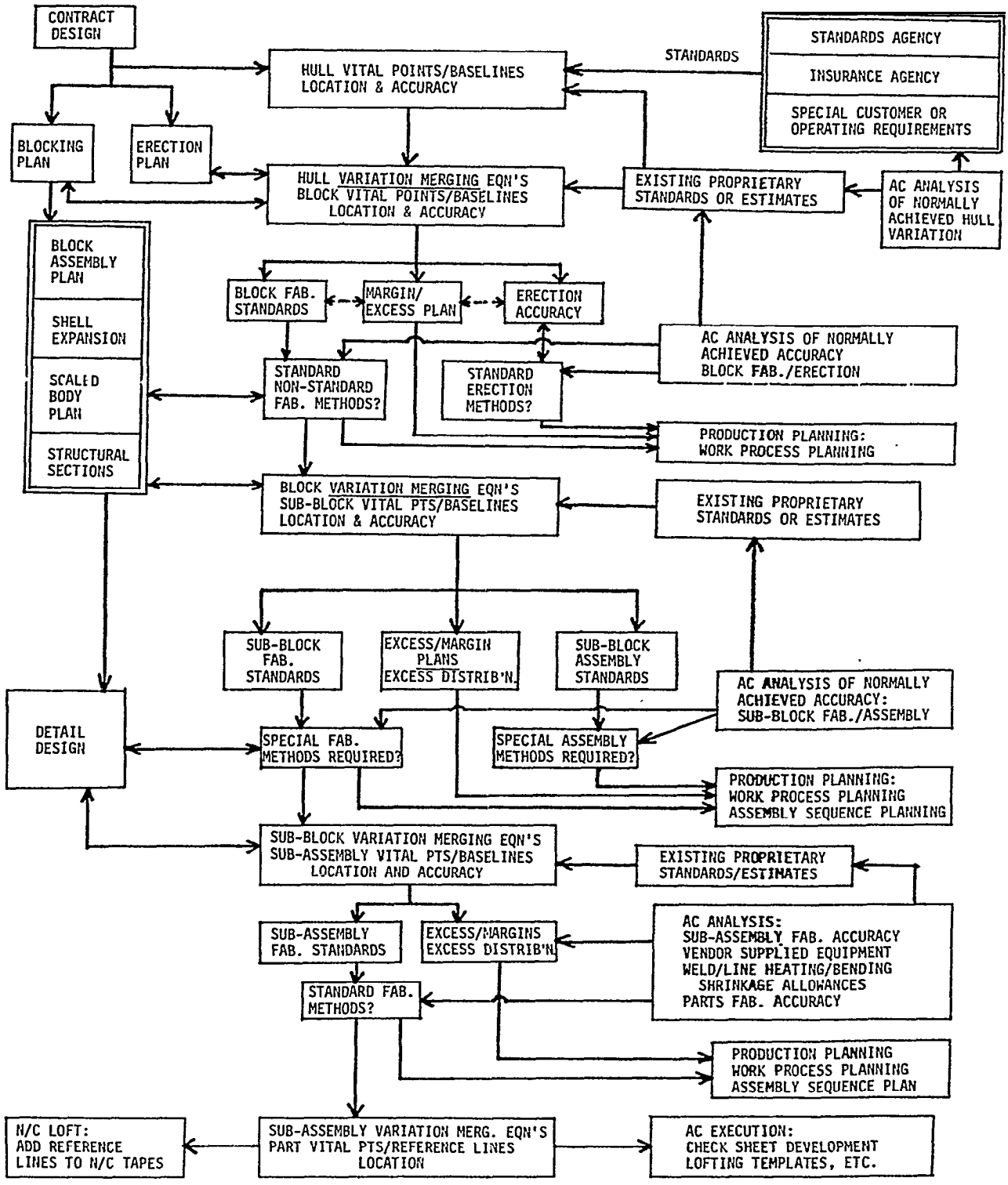

Once the hull vital points and their required accuracy are specified, the A/C planning group can develop the vital point plan for each block. The hull blocking plan will thus be required from design at this point. Engineers with A/C responsibilities should participate in the development of the blocking plan, so that blocks are created which facilitate accurate fabrication. Block vital points chosen reflect the contribution of variation in a block dimension to the merged variation of a hull vital point dimension. Block vital points would also include critical structural locations on the butt-joint with the adjoining block and critical outfit points such as a pipe end which mates to a pipe on the adjoining block. Baselines to facilitate block fabrication, erection, or measurement would also be established at this time.

Block vital points are indicated on *an* A/C plan sheet. The plan sheet includes a sketch of the block showing vital points and baselines, and lists the location of points in three dimensions, drawings from which measurements were extracted and the identity code of the vital points. A sample plan sheet is shown in Fig. 4. The plan sheets are used in preparing check sheets for recording measurements, and for documentation of vital point planning. They are the means by which the A/C planning group communicates with those having responsibility for the execution phase of accuracy control.

Another task facing A/C planners at this stage is to develop a plan for block excesses. Excesses should be based on statistical analysis of block variations for a similar type of block and fabrication sequence and method. If work processes are under statistical control, and excess amounts are chosen to exactly compensate for the statistically-derived average deviation, then there will be a small percentage of rework at the block butt joints. In the absence of such statistical information (i.e. prior to the development of the A/C data base), it may be desirable to incorporate an appropriate. margin, based on past experience. Margins--excess material to be cut neat at some stage of production--imply a commitment to rework and should be kept to a minimum. As a project progresses, A/C data may be used to eliminate margins.

The planning of block vital points is done simultaneously with the writing of the hull variation merging equations. These equations specify hull vital point variations in terms of two variables--block vital point variations and erection variations. It is because of this (geometric) relationship between hull variation and block vital point location that the hull variation merging equations (the algebraic expression of the geometric and statistical relationships) are written in conjunction with the block vital point planning. This also helps to insure that all block dimensions needed later to evaluate merged hull variation correspond to block vital point measurements. The erection sequence is needed from design, engineering and/or production planning and control in order to develop the variation merging equations.

The next stage of accuracy control planning is the development of A/C tolerances for block fabrication. The basis for these tolerances is the required accuracy of the hull based on considerations of final quality and productivity. The hull fabrication tolerances are related to block fabrication and erection tolerances by the variation merging equations. These tolerances--limits beyond which rework is required--will normally follow standards established from statistical analysis of past performance.

An important task for planners' having A/C responsibilities is the identification of standard vs. non-standard parts and assemblies. Standard parts are identified by comparing expected statistical variations for parts (using normal materials and fabrication processes and procedures) with required accuracy as

ACCURACY CONTROL PLAN SHEET

DESIGN NAME	BLOCK NO.
SUB-BLOCK/ ZONE NO.	PART NO.
PART DESCRIPTION	
STAGE OF CONSTRUCTION	
REFERENCE BASELINE DESCRIPTIONS:	
PAGE OF	
DRAWN BY DATE	REV. NO.

ATTACH SKETCH HERE

LINE NO.	MEASURE FROM	MEASURE TO	REF. DWG. # DETAIL	REF. DWG. # ISOMET.	LOCATING DIMENSIONS OF POINT MEASURED FROM: OFF ℄	P/S ?	LONG'L.	Fore/Aft	of FRAME	B.LINE	HEIGHT	ITEM / NOTES
1												
2												
3												
4												
5												
6												
7												
8												
9												
10												
11												
12												

jrg

UW '83

specified by the tolerance limits required by the design. Non-standard parts are exceptional and are to be avoided. Repeatability of production methods is crucial to improving productivity through the use of accuracy control, and this implies standardization of materials, methods and tolerances. A non-standard part requires special accuracy control planning, execution, and analysis, and may require specification of special materials or fabrication methods. Non-standard parts may be disruptive of work flow, and will be more costly.

Once a yard has built up an A/C data base and completed its analysis, block fabrication standards can be established for each size and type of block. These standards remain more or less unchanged from *one* design to another, possibly even for different types of ships. For example, the methods and accuracy of fabricating a double bottom block for part of a parallel midbody will vary little for ships of about the same overall size. Development of these standards is an accuracy control planning function.

At this point in the A/C planning process a number of items are needed from engineering (design) for each block:

1. block assembly plan
2. shell expansion
3. scaled drawings
4. structural sections
5. excess material plan (if any).

It is important that the block assembly plan include a well-specified assembly sequence, to which production personnel will agree. Throughout the A/C planning process, use is made of data on normally achieved variations at various stages of production.

Preparation of the block assembly plan, shell expansion, and excess material plan should involve personnel having A/C responsibilities and reflect accuracy control considerations. The excess material plan should be statistically derived to reflect normal variations and shrinkage. An excess distribution plan should be developed so that the final relative position of parts is within established standards. The shell strakes should be designed so as to be easily formed in an accurate manner using available facilities, tooling, and techniques. The block assembly plan should be based on assembly sequences which minimize distortion.

Once the various items, as listed above, have been supplied by engineering, vital point planning at the sub-assembly level can begin. Choice of vital points at this level is based upon considerations similar to those for block vital points. Sub-assembly vital point selection proceeds simultaneously with development of variation-merging equations for the blocks (the next assembly level up). When vital points have been established for the sub-assemblies, and block variation-merging equations written, the suitability of standard methods in terms of their associated tolerances can be reviewed. Recording of vital points is done on the A/C plan sheets, as was done with block vital points.

Vital point planning for parts, and writing variation merging equations for sub-assemblies proceeds exactly as above. The only difference is one additional task at the parts level. It is advantageous to establish reference lines on parts to facilitate measuring for accuracy control. Many of these lines may be conveniently applied by the NC equipment which does the parts cutting.

It is also necessary at this stage of planning to develop a sampling frequency plan for each work process, based on statistical theory. Sampling should cover all

aspects of shipyard production--all process lanes, procedures, and types of parts. The purpose of this sampling is to insure that work processes are in a state of statistical control. A/C personnel responsible for execution will develop control charts ($\bar{X}$,R charts) based upon the sampling frequenc plan and mean values (determined from analysis accuracy control data base) provided by the A/C planning group. such as large transverse bulkheads, engine foundations, etc. will need to receive 100% inspection, due to the high cost of rework of unacceptable parts. More standard statistical sampling is suitable for high-volume processes--parts cutting and marking, pipe cutting, etc.

At this point the vital point planning is complete down to the level of parts, and variation merging equations are written for all sub-assemblies. All vital point planning will have been documented through the use of the A/C plan sheets.

Of primary importance in filling out plan sheets and check sheets is clear identification of the exact location of the point to be checked. A space is provided on plan sheets for a sketch for this purpose. In this research, access to production-oriented isometric and exploded-view drawings provided the necessary sketches. This facilitated the process of plan sheet and check sheet preparation and revision.

The planning phase of accuracy control is at this point complete, and the documents needed to support the execution phase have been prepared. This planning must be completed prior to the initiation of production in order to allow for measuring to occur throughout the shipbuilding process. The planning procedures outlined here are aimed at facilitating A/C at shipyards that do not have considerable experience in the application of such a system. With time, procedures can be streamlined, with routine work relying heavily on prior construction projects.

As experience is gained it may be possible to significantly alter the sequence of planning. For example, it may prove unnecessary to write the variation-merging equations during the planning phase once planners have sufficient experience to ensure that all measurements necessary for interpretation of the equations will be provided for in the planning.

A/c Executing

A/C execution is concerned with two tasks:

(1) define who, when and how to measure;

(2) take measurements and record data.

Before looking into the various aspects of the execution phase, it is useful to review the purpose of all this effort. The objectives of an accuracy control program may be summarized as follows:

(1) determine that work processes are in a state of statistical control;

(2) maintain that state of control;

(3) provide information to management to facilitate process analysis and improvement.

The first two are important both in the short and long terms. Production

workers can monitor the work processes with the aid of control charts, and make adjustments when necessary to maintain the desired state of control. This has obvious short-term benefits in decreasing product variability, and hence improving productivity.

Maintaining processes in control has the additional purpose of ensuring the validity of a statistical analysis of those processes--the third objective. It is this analysis which provides the principal motivation and benefit of an accuracy control program. This third objective is a long-term goal, and its importance should not be overlooked in the headlong rush to meet contract deadlines.

The monitoring of production processes to insure that they are in a state of control makes use of information contained in the accuracy control data base. For high volume operations, such as parts cutting and marking, the necessary amount of data can be accumulated fairly quickly. If the materials which are input to such a process are of a fairly uniform character (e.g. steel plate), and the operation is highly repetitive in nature, then the process may initially be assumed to be in a state of control. A data base covering this aspect of production could therefore be quickly established independently of study of other areas.

An important aspect in connection with process monitoring is development of preventive maintenance programs for tooling and equipment. For processes to remain in control, variability of equipment conditions must be kept within certain limits. Platen areas used for assembly must be kept flat and level. NC burning and marking equipment must be kept functioning in a predictable manner. Lathes and other machine tools must be monitored for wear, slop, alignment, etc. Gauges, jigs, and guides should be checked for wear.

Performing these checks, and prescribing tolerances for equipment performance and a normal preventive maintenance program, are related to accuracy control in two ways. First, performing regular checks may be considered part of the accuracy control measurement program. Second, limiting variability in equipment functioning may be considered part of clearly defining standard work processes--applying Group Technology in the shipyard.

The frequency of these and other process-related measurements will have been prescribed in the sampling plan prepared by the A/C planning personnel. Prescribed frequencies will be based on an assessment of the costs of measurement and of undetected cases of excessive variation, the probability of such variation occurring, and the data requirements of the A/C analysis team. Preparation of sampling plans is amply covered in the statistical literature, and will not be discussed here.

The basis for prescribing standard limits for work processes is the information contained in the accuracy control data base. The mean (X) and range (R) of process variation are used to prepare "$\bar{X}$,R" charts--Shewart-type control charts. the preparation of these control charts is done using standard statistical procedures, and information is available in the statistical literature.

These control charts are used by production workers and their supervisors who regularly plot the values obtained by process sampling. The charts serve as a visual signal to workers that their work is or is not "in control." As long as plotted values fall within the control limits, work proceeds in normal fashion. If values fall outside the prescribed limits, the cause must be determined, a decision made on rework, and a correction made to eliminate the problem causing the variation. Depending on the nature and magnitude of the problem, this may involve the workers themselves, supervisors, management, etc.

One advantage of this use of control charts is that production workers become directly and actively involved in managing their own work. This can be a source of pride and motivation for workers. It also actively involves them in problem solving, and may stimulate them to suggest creative and workable process improvements. Such an expanded role for production workers can promote greater job satisfaction, and produce tangible rewards for the organization.

The methods discussed above relate to determining that processes are in control and maintaining them in control. The long-term purpose of this is to create conditions which facilitate a statistical analysis of work processes.

Data collection (measurement) can be facilitated through provision of a variety of baselines and references marked directly on the structural parts and assemblies. Shipbuilders already use a variety of such marks--ship centerline, waterlines, stations, and a variety of marks to facilitate assembly. Reference lines and baselines are often most easily applied during part cutting, probably using an NC burning machine.

One type of mark which proved particularly useful for accuracy control work is a scribed line 2" from the edge of major structural pieces. If this is known to be 2" from the edge of the plate, then a measurement from the reference line to the adjoining structural component provides several pieces of information. During assembly it provides a quick method of measuring for fitup. Following welding, it provides a measurement of final relative position of parts, where such measurement would not otherwise be possible. Comparison of the two measurements just mentioned provides a direct measure of weld shrinkage for a single weld joint. Snapping a chalk line between the endpoints allows one to check the straightness of the scribed line, which provides information about accuracy of the marking process, edge straightness, and part distortion.

At various stages of fabrication, only one side of parts is available for marking and/or measurement. The side marked originally may not be the side convenient for measurement. It is desirable, therefore, to have a tool which accurately transfers a mark from one side of a plate to the other side. The mark should be permanent and visible through paint.

This use of jigs, templates and other aids quickly becomes self-evident when A/C execution is underway. Both temporary (fixed) and reusable (adjustable) aids can be advantageously employed, to facilitate production and to help with worker self-checking and A/C measuring.

The accuracy control check sheets are the medium on which all data is recorded. The check sheet specifies the exact location of measurements, and provides spaces to record these measurements. A blank check sheet is shown in Fig. 5. The heading contains information necessary to identify the ship, the block, and the part, and the state of construction when it is to be measured. Below this is a sketch of the part which clearly shows the location of each measured point. Clear identification is essential--the check sheet can be very confusing if there are too many points shown or if they are too close together. It is better to use several sheets for a part than to have too many points crowded on one.

Below the sketch is another block which should be filled in at the time of measurement. The remainder of the page contains the data columns. The sketch, and the information specifying which measurements will be taken, can be extracted directly from the associated A/C plan sheet prepared by those responsible for A/C planning. Each plan sheet may have one or several check sheets derived from it.

ESIGN ame	BLOCK NO.	SUB BLOCK / ZONE NO.	PART NO	Stage of Construction			
art escription				Page of	Drawn by	Date	Rev No

Figure 5

ULL O	DATE Checked	Temp.	Shop where checked	Checking Personnel

EASURED ROM	TO	DIMENSION AS MEASURED	ITEM	NOTES

Preparation of check sheets should begin as soon as all information is available from planning personnel. This would normally be when the parts level A/C plan sheets have been completed by the planners. It may be possible to begin sooner by preparing check sheets as soon as plan sheets for a given stage are completed. This would then follow the hierarchical sequence of planning--hull, blocks, subassemblies, and finally parts.

Check sheets, once developed, become part of work instruction packages. This has the previously discussed benefit of involving production workers in A/C work. It also insures that measuring is done at the proper time. Secondary checks will also be made by supervisors and others having A/C responsibilities. These people will need to be provided with clear instructions concerning when measurements should be taken. Personnel having accuracy control measurement as a significant part of their jobs may need to be handling a large number of check sheets. system of keeping track of the paper work should be provided.

As discussed, the check sheets will indicate the need for measurement of numerous point locations and many lines. Many of these points are at the intersections of scribed lines on parts. Some system of identifying these points is desirable to reduce chances of error both in measurement and recording of data. Since the same point may be measured several times at different stages of production, identifying the point on the part will save time--the person doing the checking can quickly find and identify the points to be measured. Some coding method would be avantageous.

The tooling and methods used for accuracy control measurement will vary somewhat with the type, size, location and complexity of the interim product (bulkhead, bow block, pipe assembly, etc.) being measured. Tape measures, chalk lines, and other traditional fabrication tools are quite adequate for measurement of parts cut from plate. Larger curved or three-dimensional structures require more sophisticated equipment to measure curvature, twist and distortion. It is therefore useful to examine the measurement process at each stage of production.

There are several tasks to be done at the parts fabrication stage in connection with accuracy control. Overall dimensions, relative positions of lofting marks, and, on heavier plate, angle of cuts need to be measured. Even if a partial sampling scheme is employed there will be a great many parts to measure. Although common tools are adequate to the task, it may be desirable to use special jigs or gauges for repetitive measurements.

The first difficulties in measurement arise following small parts assembly. Diagonal measurements are complicated by the presence of stiffeners.

For curved parts, it is necessary to measure curvature, relative location of lofting lines and fabrication marks, and overall dimensions. Marks applied prior to bending can facilitate this *process*, and A/C measurement needs should be given careful consideration in planning. Since much of this measurement will be done by fabrication personnel as part of their normal A/C responsibilities, the procedures should not be overly complicated. If curvature can be checked without recourse to lengthy calculation, the results can be quickly readied so that rework can be initiated if necessary.

As larger assemblies are fabricated, measurement becomes more complex. Overall dimensions are still measured with relative ease using conventional tools and methods. Curvature, twist and distortion, which have a significant impact on productivity of subsequent assembly and erection, are more difficult to assess. Rationalized work areas which provide flat and level surfaces, and possibly grid

lines for reference, can go a long way toward facilitating measurement. Procedures using diagonals to measure twist are also useful.

Triangulation by transit or photogrammetry may become attractive alternatives as structures become larger and more complex. If a computer-aided data analysis facilitiy is available, this becomes the method of choice. Analysis by computer reduces chances of error but, more importantly, makes the results available in a timely fashion. This alone could justify the cost of such systems, by reducing disruptions of work flow caused by rework. To facilitate the analysis, measurements could be entered directly into the computer. This eliminates time-consuming and error-prone transcription by hand.

A/C Evaluation/Analysis

The goals of an accuracy control system are obtained by analysis of the data collected and recorded. The analysis can be subdivided into two main areas: regular and urgent. Urgent analysis takes place when sampling indicates an interim product is not built within tolerance limits and therefore has the potential to disrupt ensuing work. The urgent analysis is used to determine the best course of action, such as immediate rework and rescheduling of succeeding work packages, alteration of succeeding design details or work processes to account for the variation of the interim product, initiation of overtime to correct variations without impacting succeeding work, etc. Urgent analysis will not be considered further here.

Regular analysis is the foundation upon which the accuracy control system is built. Regular analysis is employed at a number of levels, including a comprehensive initial phase during system startup. Typical regular analysis functions include:

(1) determination of normal performance by work station or process, required during system startup or following an alteration of a work process only,

(2) establishment of X-R control charts by work station or process, also required during system startup or following an alteration of a work process only,

(3) monitoring of work performance by work station or process, using a pre-established sampling plan following establishment of X-R control charts, as described in (2) above,

(4) writing and evaluation of variation merging equations, based on design details, assembly sequence, blocking plan, etc. and employing the results of accuracy control sampling measurements by work station as described in (1) above, and

(5) process analysis, employing normal work performance data and variation merging equations, aimed at identifying specific work processes whose alteration would improve overall productivity.

Of these five specific types of accuracy control analyses, types one and two were addressed in this research. Type three, work performance monitoring, is directly dependent on the results of types one and two and is mainly dependent on establishing a sampling plan. Such plans are adequately discussed in the traditional statistical quality control literature. Type four, the variation

merging equations, will be considered in a 1983 research project, presently underway. Once a shipyard has progressed through the development and evaluation of variation merging equations, it is in a position to scientifically perform process analysis, the type of analysis that provides the ultimate payback of continuously improving productivity.

The technique of accuracy control analysis of types one and two, as defined above, will be presented through an example based on the pilot project conducted at Tacoma Boatbuilding Co. The full cycle of A/C planning, executing and evaluating was conducted during the construction of block 6 (stern section) of the first two hulls of the U.S. Navy T-AGOS ocean surveillance vessels. Figure 6 presents guidelines used in planning for block 6 and Fig. 7 is an "exploded view" drawing of block 6.

Analysis procedures and their use in developing control charts will be illustrated by the following example. Calculation of the standard deviation for a process, which is used in analysis of variation merging equations, will also be illustrated.

Analysis of accuracy control data begins with preparation of the Data work Sheets. These *work* sheets provide a convenient' tabular format for making calculations of sample variation (X) and range (R), as shown in Fig. 9. Each work sheet is used with one sample of data. A sample typically contains from 6 to 8 individual measurements, though the sheet will accomodate any size sample up to 12. Sample sizes are normally fixed by the sampling plan, developed during the A/C planning phase.

Each sample represents a small group of measurements of some particular work process at some state of construction. Plan sheets (and drawings) and check sheets provide the information needed to complete a Data Work Sheet. From the plan sheet, the ideal, or "target" dimension for a given measurement is obtained. This is recorded, along with the part number and information regarding what is being measured ("measured - from, - to"). From the check sheet the "actual" or as-built dimension is obtained and recorded in the appropriate column.

For the example, the process of developing a control chart for the overall dimensions of NC-burned parts will be demonstrated. The first (Fig. 9a) of the three work sheets shown (Figs. 9a, b, and c) will be used to illustrate work sheet calculations.

As shown on the work sheet, the variation (of an individual measurement) is obtained by simply subtracting the target dimension from the actual measurement. Applying this definition to the measurement shown in the first row of the check sheet:

$$X = A - T = 192.56 - 192.69 = -0.13 \text{ in.}$$

Variations for other measurements are calculated in like manner.

The variations for individual measurements are then totaled, and the total (EX) is divided by the number of measurements (N) to obtain an average for the sample ($\bar{X}$):

$$\Sigma X = -0.13 - 0.13 + 0.03 + 0.03 - 0.21 + 0.06 = -0.35 \text{ in.}$$

$$N = 6$$

Figure 6

T-AGOS PROJECT: BLOCK 6

GUIDELINES FOR A/C PLANNING OF BLOCK/SUB-BLOCK MEASUREMENTS

BLOCK/ SUB-BLOCK DIMENSION	FACTORS INFLUENCING DIMENSIONAL VARIATION	LOCATIONS OF ASSOCIATED MEASUREMENTS	WHEN TO MEASURE (STAGE) PAR	SUB-ASSEMBLY	SUB-BLOCK	BLOCK
LENGTH OF BLOCK OR COMPONENT	Long'1. bhd. lengths	Bhd. dimension between check points	X			
		Bhd. dimension from check point to edge	X			
	Long'1 to transverse bhd.-fit and weld	Long'l bhd. check point to transverse bhd dimension			X	
	Long'l. bhd to shell pl. weld shrinkage	Long'l. bhd. dimension--check point to check point			X	
	Long'l. bhd. to tunnel flat weld shrink	Long'l bhd dimension--check point to check point			X	
DEPTH OF BLOCK O R COMPONENT	Depth of long'l. and tranverse bhds.	Depth of bhds.	X			
	Vertical bhd. to bhd weld shrinK	Depth of bhds.			X	X
	Bhd. to shell pl. fit and weld	Bhd.--shell pl. distance			X	
TRANSVERSE DIMENSIONS	Transverse bhd. dimensions	Bhd. dimensions from check points to ship C.L.	X			
		Bhd. dimensions--check point to edge	X			
	Tunnel flat dimension	Tunnel flat check point to check point dimension	X			
		Tunnel flat check point to edge dimension	X			
	Tunnel flat weld shrinkage	Tunnel flat check point to long'l. bhd. dimension			X	
	Width of other flats	Flat check point to check point dimension	X	X		
		Flat check point to edge/ weld dimension	X		X	
	Chine angle	Overall dimensions			X	
	Shell plate bend	Overall dimensions			X	
	Transverse bhd. to shell pl. fit and weld	Transverse bhd. check point to edge dimension			X	
	Sub-block master butt--weld shrink	Overall dimensions				X
TWIST AND DISTORTION	Weld shrinkage	Overall dimensions		X	X	X
		Diagonals/Transit		X	X	X
	Locked-in stresses	Diagonals/Transit			X	X
	Movement of assemblies	Diagonals/Transit			X	X
OUTFIT COMPONENT LOCATION AND ACCURACY	Fabrication accuracy	Overall dimensions	X	X		
		Dimensions of mounts	X			
	Accuracy of placement	Location of placement		X	X	X
	Subsequent stages of assembly	See above under related block measurements				

Figure 7

BLOCK 6: EXPLODED VIEW

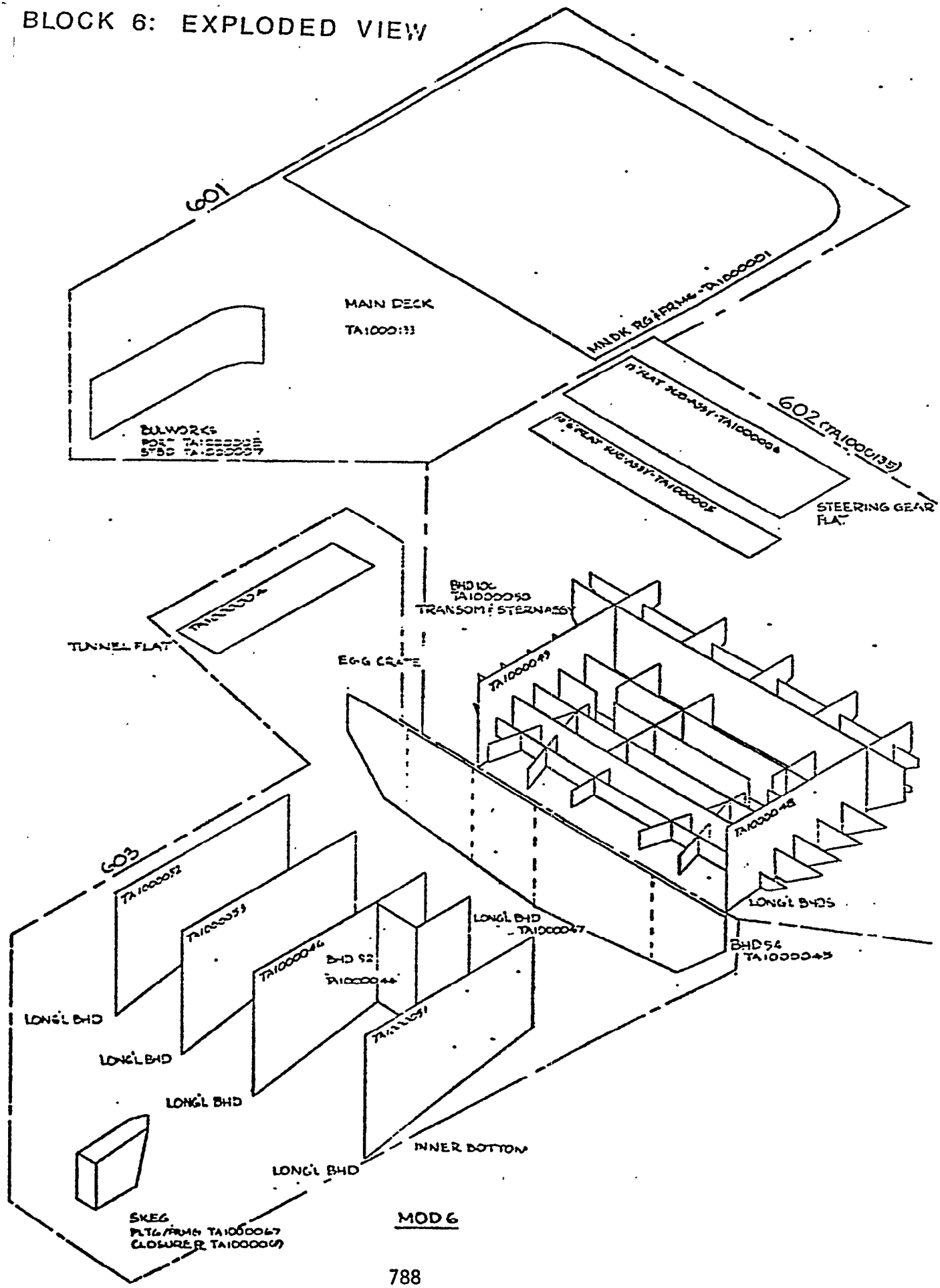

ACCURACY CONTROL DATA WORKSHEET

DESIGN NAME	HULL NO.	PLATE THK.	NAME	DATE

PROCESS	STAGE OF CONSTR.	MEASUREMENT DESCRIPTION

	PART NO.	MEASURED FROM	MEASURED TO	DIM. AS MEAS'D.	TARGET (T)	Variation (X-A-T)	NOTES
1							
2							
3							
4							
5							
6							
7							
a							
9							
10							
11							
12							

X_{min} X_{max} =	ΣX =

sample size N=

ave. variation =

range R=

FORMULAS:

$$\overline{X} = \frac{\Sigma X}{N}$$

$$R = X_{min} - X_{max}$$

Jrg U.W. '83

ACCURACY CONTROL DATA WORKSHEET

DESIGN NAME	HULL NO.	PLATE THK.	NAME	DATE
TAGOS	1, 2	5/16"	jrg	1/30/83

PROCESS	STAGE OF CONSTR.	MEASUREMENT DESCRIPTION
NC BURNING	PARTS	OVERALL DIMENSION

	PART NO.	MEASURED FROM	MEASURED TO	DIM. AS MEAS'D. (A)	TARGET DIM. (T)	Variation (X=A-T)	NOTES
1	TA1000004	a	b	192.56"	192.69"	-0.13"	tunnel flat
2	↓	c	d	192.56	192.69	-0.13	↓
3	↓	a	c	59.87	59.84	+0.03	↓ Hull #1
4	↓	b	d	59.87	59.84	+0.03	↓
5	TA1000047	a	d	47.63	47.84	-0.21	long'l bhd 48" off ℄
6	TA1000046	FWD EDGE	AFT EDGE	192.75	192.69	+0.06	long'l bhd on ℄ — Hull #2
7							
8							
9							
10							
11							
12							

$X_{min} = -0.21$
$X_{max} = +0.06$

$\Sigma X = -0.35$

sample size _____ N = 6

ave. variation _____ $\overline{X} = -0.06''$

range _____ R = 0.27 in.

FORMULAS:

$$\overline{X} = \frac{\Sigma X}{N}$$

$$R = X_{min} - X_{max}$$

jrg U.W. '83

Figure 9a

ACCURACY CONTROL DATA WORKSHEET

DESIGN NAME	HULL NO.	PLATE THK.	NAME	DATE
TAGOS	2	5/16"	jrg	1/30/83

PROCESS	STAGE OF CONSTR.	MEASUREMENT DESCRIPTION
NC BURNING	PARTS	OVERALL DIMENSION

	PART NO.	MEASURED FROM	MEASURED TO	DIM. AS MEAS'D. (A)	TARGET DIM. (T)	Variation (X=A-T)	NOTES
1	TA1000005	PF	SF	312.06"	312.0"	+0.06"	
2	↓	PA	SA	312.19"	312.00	+0.19"	
3	TA1000006	PF	SF	312.00	312.00	∅	
4		PA	SA	312.13	312.00	+0.13"	
5		PF	PA	96.00	96.00	∅	
6	↓	SF	SA	96.00	96.00	∅	
7							
8							
9							
10							
11							
12							

X_{min} = 0.00"
X_{max} = 0.19

ΣX = 0.38"

sample size _____ N= 6

ave. variation _____ $\overline{X}$= +0.06 in.

range _____ R= 0.19 in.

FORMULAS:

$$\overline{X} = \frac{\Sigma X}{N}$$

$$R = X_{min} - X_{max}$$

jrg U.W. '83

Figure 9b

Figure 9c

ACCURACY CONTROL DATA WORKSHEET

DESIGN NAME	HULL NO.	PLATE THK.	NAME	DATE
TAGOS	2	5/16"	jrg	1/30/83

PROCESS	STAGE OF CONSTR.	MEASUREMENT DESCRIPTION
NC BURNING	PARTS	OVERALL DIMENSION

	PART NO.	MEASURED FROM	MEASURED TO	DIM. AS MEAS'D. (A)	TARGET DIM. (T)	Variation (X-A-T)	NOTES
1	TA1000052	FWD EDGE	AFT EDGE	192.94"	192.69"	+0.25"	
2	TA1000004	P-FWD	P-AFT	192.69	192.69"	ø	
3	↓	P-FWD	S-FWD	59.87	59.84	+0.03	
4	↓	P-AFT	S-AFT	59.87	59.84	+0.03	
5	TA1000047	FWD EDGE	AFT EDGE	47.75	47.69	+0.06	
6	TA1000044	P @ DECK	S @ DECK	48.69	47.84	+0.85"	
7							
8							
9							
10							
11							
12							

X_{min} = 0.00"
X_{max} = 0.85"

ΣX = 1.22"

sample size _____ N = 6

ave. variation _____ $\bar{X}$ = 0.20"

range _____ R = 0.85 in.

FORMULAS:

$$\bar{X} = \frac{\Sigma X}{N}$$

$$R = X_{min} - X_{max}$$

jrg U.W. '83

$X = (EX)/N = -0.35/6 = -0.06$ in.

One other figure is needed from the work sheet--the sample range. The range is simply the difference between the smallest (X_{min}) and largest (X_{max}) values of variations for that sample. In our example:

$$R = X_{max} - X_{min} = (+0.06) - (-0.21) = 0.27 \text{ in.}$$

Once these values (N,x,R) have been calculated, they are entered into the table in the lower right of the data sheet.

Values for other samples taken at the same stage of construction and from the same process are calculated similarly. In our example, there were three such samples, each of size 6 (N=6). It is important that samples of a given class be of like size in order that comparison of R values can be made.

For the process/stage in the example, the three samples had X,R values of:

$\bar{X}$	R
-0.06 in.	0.27 in.
+0.06	0.19
+0.20	0.85

Taking averages in each category:

$$E\bar{X} = -0.06 + 0.06 + 0.20 = 0.20 \text{ in.}$$

$$\bar{\bar{X}} = 0.20/3 = 0.07 \text{ in.}$$

$$ER = 0.27 + 0.19 + 0.85 = 1.31 \text{ in.}$$

$$\bar{R} = 1.31/3 = 0.44 \text{ in.}$$

These values, $\bar{\bar{X}} = 0.07$ in. and $\bar{R} = 0.44$ in, are used in establishing the proper limits for the control chart covering the process here discussed,

The use of Shewart-type (X,R) control charts for purposes of process monitoring and control was discussed in the section on execution. Using the above examples, chart limit calculations will be demonstrated. Several control charts are shown on the pages that follow, and the first one is derived from the calculations just completed.

The calculations required to establish chart limits are tabulated on the chart itself, as shown in Fig. 10. To establish these limits, four values are required--the X and R values just calculated, and two constants, dependent on sample size, which may be obtained from the following or a similar table. Common industrial practice indicates samples sizes between 6 and 8 provide sufficient precision for control chart development and monitoring.

Sample Size (N)	A_2	D_3	D_4
2	1.88	0.00	3.268
4	0.729	0.00	2.282
		0.00	2.004
7	0.483 0.419	0.08	1.924
8	0.373		
10	0.308	0.14	1.864
12	0.266	0.28	1.717

Figure 10

PROCESS	SHOP	FREQ'CY	SAMPLE SIZE
TYPE OF MEASUREMENT			

X= R=	SKETCH
x CHART: A2 = UCL = $\overline{\overline{X}} + A_2\overline{R}$ = LCL = $\overline{\overline{X}} - A_2\overline{R}$ =	
R CHART: D_4 = UCL = D_4R = LCL = D,R =:	

$\overline{X}$

DATE

R

jrg

U.W. '82

In the case of the example, the sample size (N) is 6, giving values $A_2 = 0.483$ and $D_4 = 2.004$. The limits for the X and R charts may now be calculated.

$\bar{X}$ Chart: $\bar{\bar{X}} = 0.07$ in.
$\bar{R} = 0.44$ in.
$A_2 = 0.483$

Upper Control Limit:

$$UCL = \bar{\bar{X}} + A_2\bar{R} = 0.07 + 0.483\ (0.44) = 0.28 \text{ in.}$$

Lower Control Limit:

$$LCL = \bar{\bar{X}} - A_2\bar{R} = 0.07 - 0.483\ (0.44) = -0.14 \text{ in.}$$

R Chart: $\bar{R} = 0.44$ in.

$D_4 = 2.004$

$D_3 = 0.00$

Upper Control Limit:

$$UCL = D_4\bar{R} \quad 2.004\ (0.44) = 0.88 \text{ in.}$$

Lower Control Limit:

$$LCL = D_3\bar{R} = (0.00)(0.44) = 0.00 \text{ in.}$$

These calculations completed, it is only necessary to establish an appropriate scale, marked along the left side of the charts, and draw in the limits. The completed chart is shown as Fig. 11.

To use the chart, the average variation $(\bar{X})$ and sample range (R) are plotted, and the date indicated along the bottom of the $\bar{X}$ chart. Points which fall outside the control limits indicate that some special measure is required--an adjustment to the process, repair of equipment or parts, or analysis of why such a large variation (or range) occurred. The charts may also be used to spot trends in a work process before measurements indicate an out-of-tolerance condition.

The control chart limits are determined solely by sample size, process average $(\bar{X})$ and average range $(\bar{R})$. Care should therefore be taken in establishing the $\bar{X}$ and $\bar{R}$ values. Improper values, which could result from analysis of an unrepresentative sample of data, may result in much needless process adjustment, rework and attention. Proper values for X and R are established by ensuring sufficient data is collected so as to be representative of normal work performance. These values are obtained as a part of the initial accuracy control data base development and therefore represent a one-time, system startup investment.

The data from the work sheets are put to one further use, calculating standard deviations of variations for particular work processes. The standard deviation provides a measure of how variations are distributed about their mean value $(\bar{X})$. If the individual variations tend to vary widely, the standard deviation will be large, indicating this likely large deviation of an individual measurement from the

Figure 11

PROCESS	SHOP	FREQ'CY	SAMPLE SIZE
NC BURNING	PLATE	DAILY	6

TYPE OF MEASUREMENT OVERALL DIMENSIONS OF BURNED PARTS

$\bar{\bar{X}}$ = +0.07"
$\bar{R}$ = 0.44"

$\bar{X}$ CHART:
A_2 = 0.483
UCL = $\bar{\bar{X}} + A_2\bar{R}$ = 0.28"
LCL = $\bar{\bar{X}} - A_2\bar{R}$ = −0.14"

R CHART:
D_4 = 2.004
UCL = $D_4\bar{R}$ = 0.88"

SKETCH

NOTE: REPORT VARIATION OF MEASURED FROM DIMENSION SHOWN ON DWG.

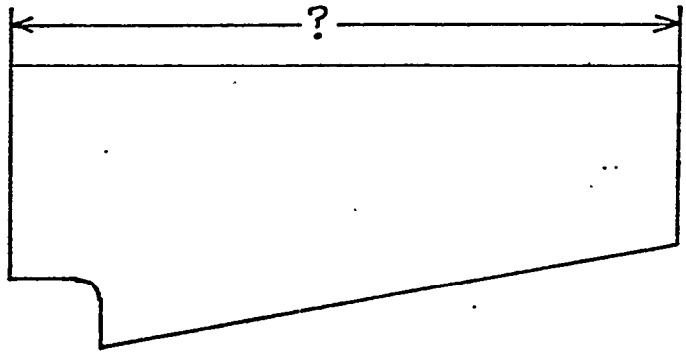

ACCURACY CONTROL CHART

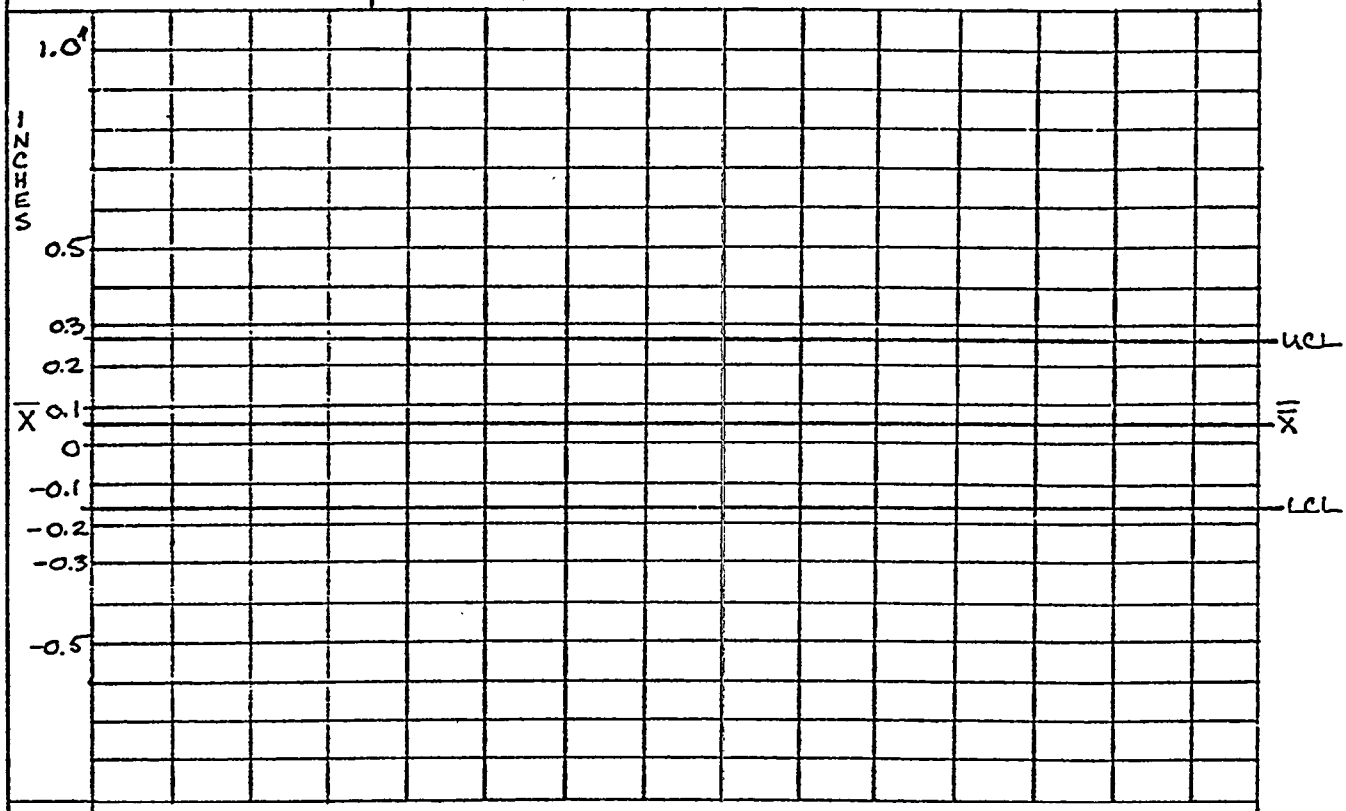

DATE

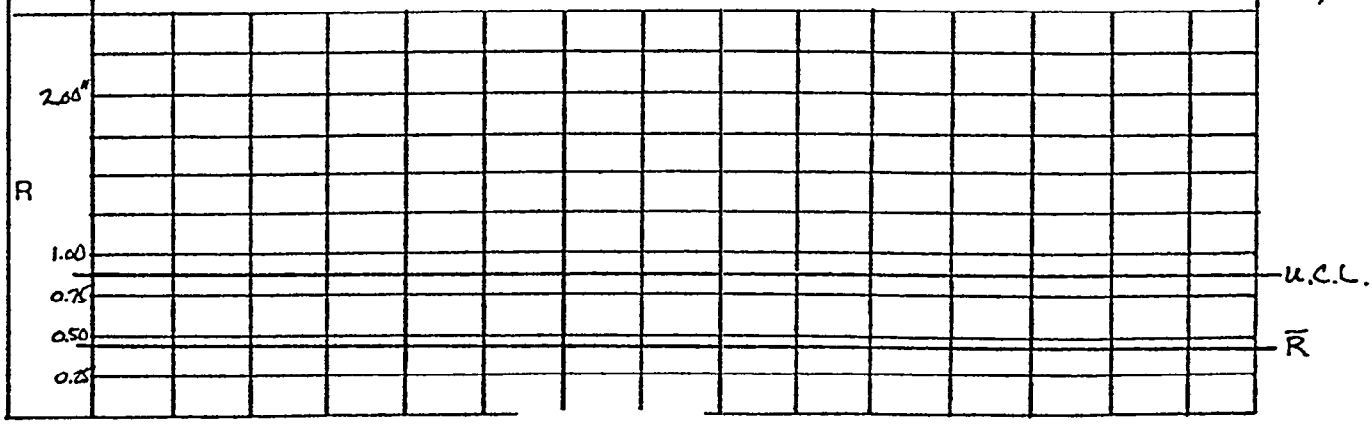

jrg U.W. '82

average value.

In subsequent analysis of variation-merging equations, the calculated values of standard deviations are used to estimate what percentage of the time merged variations will fall within a certain range of values. This amounts to an estimate of what percentage of time rework will be required, and thus has direct applications in evaluating the desirability of alternative work methods or assembly sequences, in scheduling, estimating, etc.

As mentioned at the beginning of this section, measurements of normal work performance at particular work stations or for particular processes need only be done during system startup, or when a work process is changed. For this reason, calculation of standard deviation has not been incorporated into the data work sheets, but rather was done separately.

There are several alternative approaches to calculation of standard deviation, most notably using a histogram (bar chart) approach. This method has the advantage of providing an easily-understood graphical display of the results. See Ref. 1.

The approach shown here is somewhat more direct, since it skips the preparation of the histogram, but has the disadvantage of lesser clarity for those not familiar with statistics. It is shown in the table below. The data used are again measurements of the overall dimensions of burned parts.

The first column, marked X_j, is simply the individual variations, extracted from the three data work sheets used in the example. The next column is the value of the difference between the individual variation and the previously calculated process average ($\bar{X}$). In the third column, this value is squared for each individual variation.

The sum of the individually listed squares is 0.872 in. This value when divided by one less than the number of data points gives the square of the standard deviation o (also called "variance"). The square root of this figure is the standard deviation o.

The tabulation produces a value slightly different from that shown on the summary of results from the preliminary analysis. This difference is due to rounding of numbers for hand calculation, and the more accurate value (0= 0.22 in.) is the one listed in the summary.

Doing calculations of standard deviation by hand is somewhat tedious. Most "scientific" calculators will perform these and other statistical calculations automatically, with a lesser tendency to error provided the data is entered correctly. Alternatively, if data are to be stored and analyzed by computer, these computations could be performed directly. As mentioned earlier, the standard deviations are determined only as a part of system startup, or following process changes and are used primarily during design and planning in conjunction with the variation merging equations. The end result of the application of the variation merging equations is quantitative process analysis, producing a methodology for continuing improvements in productivity.

Accuracy Control Analysis:
Overall Dimension of Burned Parts--
Calculation of Standard Deviation

$\bar{\bar{X}} = 0.07''$

N	Xi	$X_i - \bar{\bar{X}}$	$(X_i - \bar{\bar{X}})^2$
1	-0.13 in.	-0.20 in.	0.040 in.
2	-0.13	-0.20	0.040
3	+0.03	-0.04	0.016
4	+0.03	-0.04	0.016
5	-0.21	-0.28	0.078
6	+0.06	-0.01	0.000
7	+0.06 in.	-0.01 in.	0.000 in.
8	+0.19	+0.12	0.014.
9	0.	-0.07	0.005
10	+0.13	+-0.06	0.004
11	0.	- 0 . 0 7	0.005
12	0.	-0.07	0.005
13	+0.25 in.	+0.18 in.	0.032 in.
14	0.	-0.07	0.0005
15	+0.03	-0.04	0.002
16	+0.03	-0.04	0.002
17	+0.06	-0.01	0.000
18	+0.85	+0.78	0.608

$$\Sigma(X_i - \bar{\bar{X}})^2 = 0.872 \text{ in.}^2$$

$$\sigma^2 = \frac{\Sigma(X_i - \bar{\bar{X}})^2}{N - 1} = \frac{0.872 \text{ in.}^2}{17} = 0.051$$

$$\sigma = \sqrt{\sigma^2} = 0.23 \text{ in.}$$

Conclusions

Research conducted by University of Washington personnel at Tacoma Boatbuilding Company has provided a basis for any U.S. shipyard to initiate and operate an accuracy control system. This paper has discussed system startup and a case study of accuracy control planning, execution and evaluation (analysis). Research currently underway will consider the final major step in the accuracy control process, variation merging equations, and indicate the application of those results to process analysis.

Eleven major conclusions can be used to summarize this paper.

1. An accuracy control system is comparatively simple to explain and operate. Although it does require careful planning and some tedious measuring, the benefits of such a system will clearly justify these efforts.

2. Accuracy control is cost effective in both the short and long terms. Of primary importance is the fact that accuracy control can be established as a part of normal design and construction without a major requirement for additional capital and manpower resources. In fact, experience at Tacoma Boatbuilding Company would indicate that monitoring of accuracy in the early stages of construction can have direct short term benefits in reduced rework and disruption at later stages that outweigh the costs associated with accuracy control data collection and analysis. The longer term benefits of improved productivity as a result of process analysis have yet to be shown in the U.S. Such benefits are not likely to accrue until an accuracy control system has been in place for 5 or more years. Experience in other manufacturing industries has shown that these benefits will far overshadow the short term benefits.

3. A prerequisite to establishing an accuracy control system at a shipyard is the organization of work by a Product-oriented-Work Breakdown Structure employing the principles of group technology. A part of this work organization is well defined and repeated assembly and welding sequences.

4. The availability of an accuracy control data base is a prerequisite to achieving long term benefits from the system. The data base is a statistical history of normal work performance at each work station. Its development is a one time investment, requiring a commitment of manpower for measuring and possibly some computer time for data handling and analysis.

5. A/C planning must accompany design and engineering and must follow the same basic approach, beginning with the blocking plan and working along with engineering toward more detailed design and definition of the vessel and the production plan. Accuracy control planning mirrors the design process, in which complete vessel and system considerations lead to the transition to zone or block design and then to lower levels of sub-block, sub-assembly and parts fabrication.

6. The planning stage is extremely important in order to increase the value and decrease the amount of work required for execution and

evaluation. Clear check- sheets and punch mark locations for N/C tapes are the most critical outputs of the planning phase of accuracy control.

7. A/C execution is comparatively simple and is neither time consuming nor disruptive of work. Proper planning facilitates execution by clearly defining who, when, what and how to measure. Most measurements require only a tape measure, level, plumb bob and chalk line.

8. A/C evaluation can be accomplished using well defined statistical techniques now employed in other areas of manufacturing. Use of a computer would facilitate the analysis.

9. An operational accuracy control system leads to greater worker satisfaction, since it defines expected performance based on previously measured, normally attainable performance. Worker generated suggestions for improvement in work processes can be quantitatively evaluated. Additionally, faults inherent within the system cannot be blamed on worker performance. Following system initiation procedures, worker acceptance of accuracy control at Tacoma Boatbuilding Co. was enthusiastic.

10. Accuracy control procedures greatly improve management control of production processes. Since work processes are carefully defined and systematically monitored, management has far better data concerning actual performance at each work stage. This provides the capability of quantitatively evaluating alterations in processes, capital improvement requests, effects of change orders, manpower requirements, etc.

11. Short term benefits of accuracy control include reduced rework and disruption, better information for shipwrights, and better scheduling. Long term benefits include, better feedback for estimating, better design details, establishment of shrinkage of parts during construction, improved equipment maintenance scheduling, better information for decision-making, better worker satisfaction and, of most importance, improved productivity.

SNAME's SHIP DESIGN COMMITTEE OVERVIEW
THE FIRST YEAR

Robert S. Johnson
Manager Ship Design
Westinghouse Defense & Electronics
Systems Center
Baltimore, MD

ABSTRACT

SNAME's New Ship Design Committee - The First Year. Established in February 1982, the Ship Design Comittee was created with the charter to encompass requirements development through the completion of Contract Design. This presentation provides a recap to date of the committees background, membership composition and meeting activities. A discussion of their interface with the Ship Production Committee is also included.

SNAME's New Ship Design (Committee - The First Year

Background

During 1981 an ad hoc Ship Design Committee under the Charimanship of Bill Hunley studied the need for a new committee to be established under the T&R Steering Committee of the Society of Naval Architects & Marine Engineers. Their report, Reference 1, was delivered to the T&R Steering Committee in November 1981. After some discussion the establishment of the Ship Design Committee was recommended by the T&R Steering Committee and approved by the Executive Committee on 11 February 1982. Its general charter was to encompass requirements development through the completion of Contract Design.

On 22 February I was invited to be its first Chairman and felt honored to accept that challenge. I determined that broad representation on the committee from government and industry was needed. Nominees for the Committee were sought from 36 major organizations and 24 were received. I did not want it to be too large so that discussion would be free. I.-sought advice from two very experienced members of SNAME and as a group we tried to select a Committee which represented a cross section of:

Kinds of organization:	Government, Regulatory, Shipbuilders, Design Agents and Academia
Geography:	East, West, & Gulf Coasts and Great Lakes

I had also requested senior people as nominees in order to set a solid lcng term policy for the Committee's activities. It was and is my intention to broaden the participation by selecting Panel Chairmen and other Committee and Panel members from more and more organizations as time goes on. I also expect a modest turnover in Committee membership (one original member has already retired and resigned and another is expected to do so). The original Committee members were:

Jack Berner, NAUSEA
Felix Bledsoe, Newport News Shipbuilding
Howard Chatterton, U.S. Naval Academy
Peter Buckley, Todd Pacific (San Pedro)
Charles Cherrix, Marad
Mel Colen, Alvondale Shipyards
Pete Gale, NAVSEA
John Hunter, General Dynamics (Groton)
Jake Lindgren, Ingalls Shipbuilding
Perry Nelson, M. Rosenblatt & Son
Wolfgang Reuter, Designers & Planners
Don Roseman, Hydronautics
Bob Scott, Gibbs & Cox
Dick Suehrstedt, Marine Consultants & Designers

The Committee met for the first time on 6 October 1982. By the time of the first meeting I had decided to solicit a liason member to the Ship Design Committee from the Ship Production Committee. My first announcement at the first meeting was that Baxter Barham, Jr. had been selected by the Chairman of the Ship Production Committee to be that liason. The Ship Design Committee members all agreed that it was essential to have such liason to assure no duplication of effort and maximize the resources available to the two committees. (This approach was recently reaffirmed to me by Ed Peterson upon his appointment to the Chairmanship of the Ship Production Committee.)

First Meeting (October 6, 1982)

The first meeting had a wide ranging discussion, including consideration of all recommendations of Reference 1, but settled on the following Action Items:

- Develop a brief definition of the Ship Design Process
- Define a standard output from Contract Design, it being the major handoff between ship designers and shipbuilders.
- Examine if there are requirements being layed on Shipbuilders by Ship Specifications for which the design technology does not exist to implement them.
- Develop a Charter for the Committee

Second Meeting (January 19, 1983)

At the Second Meeting it was determined that the Contract Design definition task and the definition of Contract Design in the brief definition of the ship design process task were very close and should be reconciled. The charter continued under review.

The problem of the inability to exchange data between different CAD systems was called to the Committee's attention, This was considered very serious and needed prompt action. An ad hoc task group was set up to study the general problem of standardization in the design process with the first priority given to looking into the CAD system incompatibility problem.

There was also a discussion on the need for a Weights Panel.

The following Action Item was identified:

- Establish an ad hoc task group to look at the need for a panel on standardization in design. Its first task was to look at interfacing different CAD systems.

Third Meeting (April 5, 1983)

A list of fifty research items for which shipbuilders were asked to do design work and for which little data exists was submitted. A standard list of Contract Design Deliverables was submitted. An interim report of the ad hoc task group studying CAD interfaces was given. The following Action Items were identified.

- Establish an ad hoc task group to look at the need for a Weights Panel.

- The Chairman took the action of providing the list of research items to Chairmen of the appropriate T&R Committees which was accomplished at the 27 April 1983 T&R Steering Committee Meeting,

Fourth Meeting (June 16, 1983)

The draft charter was reported as being almost finalized. The standard list of Contract Design Deliverables was reported as being complete. The Committee determined that it should be circulated widely for comment.

An interim report from the ad hoc task group on a Weights Panel indicated that one would probably be recommended. The ensuing discussion suggested the need for a companion Stability Criteria Panel.

The need for a succinct guide for preliminary designers on producibility considerations was suggested. Baxter Barham, our liason from the Ship Production Committee, pointed out that such a task was partially complete and solicited input from the Ship Design Committee.

The following Action Items were taken:

- Establish an ac hoc task group to investigate the need for a Stability Criteria Panel

- A copy of the guide on producibility was requested so that the Ship Design Committee could review it and provide an input

Fifth Meeting

The fifth meeting will be held at Avondale Shipyards in September 1983 and will concentrate on the report from the ad hoc task group investigating the interfacing of CAD systems. The Charter will be voted on and the report of the ad hoc task group on a Weights Panel will be received.

Summary

The first year of the Ship Design Committee's labors have had an enthusiastic and wide participation by its members. Its accomplishments are:

identifying and initiating analysis of' the incompatibility of various CAD systems

proposing a definition of standard deliverables from Contract Design

The Committee's structure is beginning to form. Depending on the final outcome of deliberations, panels may be established in the areas of:

Standardization in Design,
Weights, and
Stability Criteria

The need for establishing a Ship Design Committee appears to have been well founded.

Reference

1. Hunley, W. H., "Report on the ad hoc Ship Design Committee, "SNAME Spring Meeting/STAR Symposium, Honolulu, Hawaii, 20 - 23 April 1982.

THE 5-YEAR NATIONAL SHIPBUILDING PRODUCTIVITY IMPROVEMENT PLAN

Edwin J. Petersen
Vice President, Programs & Resources
Todd Pacific Shipyards Corporation, Los Angeles Division
San Pedro, California
Chairman, Ship Production Committee, SNAME

Mr. Petersen was appointed to succeed Ellsworth Peterson as Chairman of the Ship Production Committee of the Society of Naval Architects and Marine Engineers in May 1983.

Mr. Petersen joined Todd Los Angeles as Program Manager for Guided Missile Frigates in 1976, advancing to his current position in 1981. Prior to joining Todd, he held key executive and technical management positions with Designers and Planners, Inc., Defoe Shipbuilding Company, and Rudman and Scofield. He served in the U.S. Navy as a line officer in cruisers and submarines, followed by six years as an engineering duty officer.

Mr. Petersen is past Chairman of the Long Beach-Greater Los Angeles Section of the American Society of Naval Engineers and is currently serving on the Executive Committee of the Los Angeles Metropolitan Section and the Awards Committee of the Society of Naval Architects and Marine Engineers and on the U.S. Naval Academy Alumni Association. He is a registered professional engineer in the State of Michigan.

A 1953 graduate of the U.S. Naval Academy, Mr. Petersen holds Master of Science and Naval Engineer degrees in Naval Architecture and Marine Engineering from Massachusetts Institute of Technology.

ABSTRACT

Over the past twelve years the Ship Production Committee (SPC) of SNAME has achieved solid accomplishments in its technical management of the National Shipbuilding Research Program through a relatively informal cooperative effort with private shipyards, design firms, educational institutions, government agencies and other technical societies and maritime organizations. Through a truly national effort, a comprehensive Five Year National Shipbuilding Productivity Improvement Plan has been drafted and has received widespread favorable endorsement by the U.S. shipbuilding industry. The plan is needed at this time to take advantage of the progress already made and to provide a more formalized framework for continued cooperation in developing and implementing the technical and management tools which can substantially reduce the cost and time needed to build and repair ships in this country.

As before, the productive work of the National Shipbuilding Research Program will be carried out by the Technical Panels of the Ship Production Committee. The sole purpose of the Five Year Plan is to make it possible for the Panels to do their work more effectively for the benefit of the maritime community. It is now anticipated that final revision and issuance can be completed by December, 1983 in order that the Plan can be implemented for next year's Program.

THE S-YEAR NATIONAL SHIPBUILDING PRODUCTIVITY IMPROVEMENT PLAN

Edwin J. Petersen
Vice President, Programs & Resources
Todd Pacific Shipyards Corporation, Los Angeles Division
San Pedro, California
Chairman, Ship Production Committee, SNAME

As the new Chairman of the Ship Production Committee of the Society of Naval Architects and Marine Engineers, it is a special privilege for me to address this distinguished gathering at our annual technical symposium on shipbuilding and ship repair productivity. [I]

I can't really talk about the "5-Year: National Shipbuilding Productivity Improvement Plan" without also talking about the Ship Production Committee of SNAME and the National Shipbuilding Research Program, as the three subjects are so closely interrelated that they can't be separated from one another,

But first, a bit of history going back in time some forty years to World War II. In a short five year period the U.S. shipbuilding industry achieved unprecedented levels of productivity as it constructed, repaired, and maintained the largest and most powerful naval and merchant fleet the world has ever known. This remarkable feat was accomplished through a totally cooperative effort among shipbuilders, ship designers, suppliers, and the U.S. Government acting as an integrated team. Five principal factors made this achievement possible: first, a national commitment to get the job [2] done; second, recognition and support of the shipbuilding industry as a national asset; third, a dependable workload: fourth, extensive standardization of ship and ship component designs; and fifth, highly effective organization of the ship construction process.

Since World War II, a sequence of initially lower foreign labor rates followed by aggressive adoption of improved shipbuilding technology, coupled with enlightened foreign governmental maritime policies, has

led to progressively increasing foreign domination of the shrinking worldwide commercial shipbuilding market and the concomitant decline of the U.S. industry's competitiveness in the international arena. Aggravating this situation have been the lack of cohesive U.S. maritime policy and a late start on the part of U.S. yards to invest in improved facilities and methods to keep pace with the times.

Now the U. S. shipbuilding industry is faced with the challenge of rebuilding and maintaining the nation's seapower at an acceptable level and recapturing a greater share of the world's commercial market in order to survive and prosper once again. To achieve these ends, the industry must dramatically improve its productivity over the next several years through a combination of cooperative and individual efforts. I am convinced that, working together, we can make this happen.

To bring you up-to-date, I took over the Ship Production Committee Chairmanship from Ellsworth Peterson effective May 9. In Ellsworth's more than eight years at the helm, a great deal was accomplished and the Committee left a mark on our industry that will last for some time to come. This mark is an imprint called "HOPE" in an otherwise rather depressing sea of gloom, for shipbuilding, repairing and operating are currently in a severe state of depression worldwide, as you know. The hope stems from the unpretentious but solid accomplishment of SPC over the past several years in its technical management of the National Shipbuilding Research Program under Ellsworth's leadership. Impressive results have already been achieved and further progress is being made in many areas of ship construction and repair. To name a few: [3]

- Reorganization of work for greater production efficiency utilizing the principles of group technology;

- Introduction of accuracy control and line heating;

- Welding technology, including introduction of both fixed-

base and portable welding robots;

- Long-range facilities planning;

- Modeling techniques including photogrammetric and computer modeling methods:

- Shipbuilding standards;

- Application of Industrial Engineering concepts;

- Improvements in surface preparation and coating;

- Better integration of design and planning with production;

- Education and training of our industry's most important and indispensable asset - its human resources.

The National Shipbuilding Research Program (NSRP) is a cooperative technical venture among the Ship Production Committee of SNAME, private industry, educational institutions and government.

The principal strength of the Program lies 'in its emphasis on implementation. There are no interminable studies; no "pie-in-the-sky" research. The main thrust of the program has been and should continue to be: Investigate what is available now determine what is needed to [4] use it in U.S. shipbuilding; analyze the cost and benefits of its use the best that can be determined ahead of time; develop guidance or instructions needed for its use; and then TRY IT!

Most of you are aware that there are a number of governmental and nongovernmental conferences, advisory councils, commissions, committees, subcommittees, and other groups studying and making reports, recommendations, and news releases on what can be done and what should be done about shipbuilding productivity. Of particular interest to me was an article in the August 11, 1983 issue of the

Shipbuilder's Council "Shipyard Weekly" reporting on the deliberations of a "Preparatory Conference on Private Sector Initiatives" conducted August 2 to 4 at the University of Pittsburgh's NASA Industrial Applications Center in preparation for a White House Conference on Productivity to be held in September.

According to Dr. Paul A. McWilliams, the University's Assistant Provost and Senior Vice-Chancellor, the Conference proposed five "productivity enhancement" goals for the U.S. shipbuilding and ship repair industry. **[5]**

(1) Utilization of shipyard assets for multi-product lines of shipbuilding and general heavy construction nature,

(2) Implementation of flexible manufacturing capabilities in shipyards,

(3) Development of training and retraining measures for professional and production personnel,

(4) Definition and activation of a "shipyard of the future" pilot facility, and

(5) Compilation and utilization of national and international technologies for establishment of data bank to be used by government, industry and academe.

Dr. McWilliams also stated that, "improving the productivity of our Nation's shipyards will require a highly organized network of multidisciplinary talent" and "applied technology transfer." **[6]**

Well I have good news for you! The National Shipbuilding Research Program has in place - and has had in place for several years - a "highly organized network of multidisciplinary talent" and has initiated or has in progress specific projects (some of which have been underway for several years) toward the accomplishment of each of

the five above-listed goals, Furthermore, the draft Five Year Plan soon to be issued documents the organization, resources, and actions required to actually implement the individual projects. And those are key words: " actually Implement." No other group or program has in place the means or management resources for actual implementation of pilot programs within the U.S. shipyard environment and then account for the results . We in the National Shipbuilding Research Program propose to do both and the basic purpose of the Five Year Plan is to help us do this more effectively than at present.

Now to get to the advertised subject of this presentation: Last year a comprehensive Five Year Shipbuilding Productivity Improvement Plan was developed through a truly national effort. More than 40 knowledgeable people representing at least thirty different organizations contributed to this effort, and the draft plan has received favorable endorsement of most major shipyards. The Plan has been in a "hold" status pending the changeover in Ship Production Committee Chairmen, promulgation of a SNAME Elue Ribbon Committee review report on the effectiveness of the Ship Production Committee's operations, including recommendations for improvement, and the very recent decision by the IREAPS Board of Directors to disestablish IREAPS and request SPC to take over a number of its NSRP-related functions. As I see it, all of the pending matters can be resolved quite expeditiously, and I fully expect that the final revision to the Plan reflecting these developments can be approved and issued by the end of the year for use in next year's program.

Meanwhile, I am going to confine my coverage of the Five Year Plan to its more salient features and label this part of the presentation "Preliminary" pending final approval and release of the Five Year Plan.

The next slide provides an outline of the Plan as currently structured. The most important part is Appendix A, a comprehensive listing of completed, in-progress, and proposed future projects, roughly sorted by cognizant Technical Panel. One of the early [7]

"Actions" required by the Implementation section of the Plan is for the Program Managers to review and recommend readjustments to the Project Listing as necessary.

The next slide presents what I consider to be the salient features of the Plan: **[8]**

- It continues and improves upon the effective features of the National Shipbuilding Research Program;

- It provides a written framework for cooperation;

- It provides for strengthened top-level guidance and direction;

- It provides for an improved annual budget and project development, review, and approval cycle, thereby providing better assurance that the projects and funds authorized will be selected on the basis of maximum potential benefit to the industry;

- It provides for development of an objective performance measurement system; and

- It is self-adjusting by virtue of a built-in annual review and revision cycle.

My view of the organization structure and functions - utilizing a simplified "corporate" analogy - is represented by the next slide. **[9]** The actions needed to realign the Ship Production Committee organization as shown are currently in progress so I want to emphasize that this is a " PROPOSED " structure. In my view, this division of responsibilities, coupled with a well-considered scheme for making the appropriate appointments, will give the National Shipbuilding Research Program improved top level guidance and direction, which happens to be one of the principal recommendations of the SNAME Blue Ribbon

Committee.

The Ship Production Committee (SPC) General Membership represents all segments of the maritime community involved in ship design and construction at upper management levels and is intended to ensure the needs of the maritime industry are being met by this technical program. In addition, the chairman of each technical panel is appointed to membership.

The Executive Steering Group to be appointed from the Committee general membership is intended to provide policy guidance and direction to the Chairman and Operating Group.

The Ad Hoc Task Groups will be appointed as needed to cover such special tasks as Five Year Plan revision, technical symposium planning, and other temporary Committee support functions that should not be assigned to the technical panels in order to avoid distracting them from their principal technical objectives.

Finally, we have the Operating Group - the Technical Panels that carry out the work of the National Shipbuilding Research Program.

The next slide shows the present lineup of technical panels, including one panel, SP-5, formerly "Manpower" that is currently inactive. There is a proposal in the mill to reactivate SP-5 and redesignate it as the "Human Resources" panel, a technical/management area vital to the success of the National Shipbuilding Research Program. There is also under discussion the potential need for a panel to take over some of computer technology functions previously assigned or proposed for IREAPS. However, these decisions will be reached after due consideration by the reconstituted Ship Production Committee. [10]

Each technical panel is headed by a panel chairman nominated by the sponsoring organization and is managed by a dedicated program manager who is responsible for carrying out the assigned technical projects within the authorized schedule and budget.

In my view, what is needed to significantly improve our cost and schedule performance in building and repairing ships in this country is better management of all the resources that go into the product - manpower, material, facilities and time. That is what group technology is all about, and with the above-discussed technical panels in operation, the Ship Production Committee has all the bases covered.

Now it is time to hear from the most important people of all - the ones who will make it happen, the Panel Chairmen and Program Managers,

TODD PACIFIC SHIPYARDS CORPORATION

THE FIVE YEAR NATIONAL PLAN FOR SHIPBUILDING PRODUCTIVITY IMPROVEMENT THROUGH 'THE NATIONAL SHIPBUILDING RESEARCH PROGRAM, MANAGED BY THE SHIP PRODUCTION COMMITTEE OF THE SOCIETY OF NAVAL ARCHITECTS AND MARINE ENGINEERS

JOINTLY FUNDED BY:

- PARTICIPATING PRIVATE SHIPYARDS
- U.S. MARITIME ADMINISTRATION
- U.S. NAVY

TI 2105

MAJOR CONTRIBUTING FACTORS TO U.S. SHIPBUILDING PRODUCTIVITY DURING WORLD WAR II

- NATIONAL COMMITMENT: GET THE JOB DONE!
- SHIPBUILDING INDUSTRY: A NATIONAL ASSET
- DEPENDABLE WORKLOAD
- EXTENSIVE STANDARDIZATION

@EFFECTIVE ORGANIZATION OF WORK

TI 2108

SNAME/SHIP PRODUCTION COMMITTEE NATIONAL SHIPBUILDING RESEARCH PROGRAM ACCOMPLISHMENTS

- ORGANIZATION OF WORK
- ACCURACY CONTROL
- WELDING TECHNOLOGY
- LONG-RANGE FACILITIES PLANNING
- MODELING TECHNIQUES
- SHIPBUILDING STANDARDS
- INDUSTRIAL ENGINEERING
- SURFACE PREPARATION AND COATING
- INTEGRATION OF DESIGN, PLANNING & PRODUCTION
- EDUCATION AND TRAINING

TI 2107

NATIONAL SHIPBUILDING RESEARCH PROGRAM BLUEPRINT FOR SUCCESS:

- INVESTIGATE WHAT IS AVAILABLE NOW
- DETERMINE HOW TO USE IT
- ANALYZE COST AND BENEFITS
- DEVELOP IMPLEMENTATION GUIDELINES
- TRY IT!

TI 2108

PROPOSED PRODUCTIVITY ENHANCEMENT PROGRAM FOR SHIPBUILDING & SHIP REPAIR

1. UTILIZE SHIPYARD ASSETS FOR MULTI-PRODUCT LINES
2. IMPLEMENT FLEXIBLE MANUFACTURING
3. DEVELOP TRAINING & RETRAINING MEASURES
4. DEFINE & ACTIVATE PILOT "SHIPYARD OF THE FUTURE" PROJECT
5. ESTABLISH DATA BANK OF EXISTING NATIONAL & INTERNATIONAL TECHNOLOGIES

SOURCE: PREPARATORY CONFERENCE ON PRIVATE SECTOR INITIATIVES, AUG. 2-4, 1983 AT THE UNIVERSITY OF PITTSBURGH AS REPORTED IN "SHIPYARD WEEKLY", SHIPBUILDERS COUNCIL OF AMERICA, THURS. AUG. 11, 1983

TI 2112

TODD PACIFIC SHIPYARDS CORPORATION

"IMPROVING THE PRODUCTIVITY OF OUR NATION'S SHIPYARDS WILL REQUIRE A HIGHLY ORGANIZED NETWORK OF MULTIDISCIPLINARY TALENT. . . AND APPLIED TECHNOLOGY TRANSFER"

DR. PAUL A. McWILLIAMS
ASSISTANT PROVOST & SENIOR VICE-CHANCELLOR
UNIVERSITY OF PITTSBURGH

SOURCE: PREPARATORY CONFERENCE ON PRIVATE SECTOR INITIATIVES, AUG. 2-4, 1983 AT THE UNIVERSITY OF PITTSBURGH AS REPORTED IN "SHIPYARD WEEKLY", SHIPBUILDERS COUNCIL OF AMERICA, THURS. AUG. 11, 1983

TI 2113

FIVE YEAR NATIONAL SHIPBUILDING PRODUCTIVITY IMPROVEMENT PLAN

- OUTLINE -

TI 2114

FIVE YEAR PLAN - SALIENT FEATURES

- CONTINUES CURRENT BASIC FORMAT OF NATIONAL SHIPBUILDING RESEARCH PROGRAM
- WRITTEN PLAN
- STRENGTHENED TOP LEVEL GUIDANCE & DIRECTION
- IMPROVED ANNUAL BUDGET & PROJECT DEVELOPMENT, REVIEW & APPROVAL CYCLE
- OBJECTIVE PERFORMANCE MEASUREMENT SYSTEM
- ANNUAL REVIEW, REVISION, ADJUSTMENT

TI 2116

THE FIVE-YEAR PLAN PROPOSED TECHNICAL MANAGEMENT ORGANIZATION: THE SHIP PRODUCTION COMMITTEE (SPC) OF SNAME

FOUR GROUPS -

- SPC GENERAL MEMBERSHIP "STOCKHOLDERS"
- EXECUTIVE STEERING GROUP "BOARD OF DIRECTORS"
- OPERATING GROUP "TECHNICAL PANELS"
- AD HOC TASK GROUPS "SPECIAL TASK ASSIGNMENTS"

TI 2116

SPC CURRENT
TECHNICAL PANEL ORGANIZATION

CHAIRMAN

- 023-1 - SURFACE PREPARATION & COATING
- SP-1/3 - FACILITIES & ENVIRONMENTAL EFFECTS
- SP-2 - OUTFITTING & PRODUCTION AIDS
- SP-4 - DESIGN/PRODUCTION INTEGRATION
- SP-5 - HUMAN RESOURCES (PROPOSED)
- SP-6 - STANDARDS & SPECIFICATIONS
- SP-7 - WELDING
- SP-8 - INDUSTRIAL ENGINEERING
- SP-9 - EDUCATION & TRAINING
- SP-1O - FLEXIBLE AUTOMATION

TI 2117

SP-2: OUTFITTING AND PRODUCTION AIDS

L. D. Chirillo
L. D. Chirillo & Associates
Bellevue, WA

During the last twelve years Mr. Chirillo managed many projects for the National Shipbuilding Research Program. In June 1981, he was presented with the William M. Kennedy Award by the Society of Naval Architects and Marine Engineers "for outstanding service and contributions in the development of systems and planning as applied to shipbuilding and ship repair." His firm L. D. Chirillo Associates of Bellevue, Washington, assists the Los Angeles Divison of Todd Pacific Shipyards Corporation in their management of part of the National Shipbuilding Research Program.

ABSTRACT

We in the United States have been poor listeners. The Japanese have been telling us about their superior shipbuilding system, in English, for at least two decades. Finally, initiatives by Panel SP-2 for the National Shipbuilding Research Program, brought to industry's attention the highly organized nature of Japan's shipyards. Modern industrial sciences are practiced, such as statistical control of manufacturing which provides a built-in method for constant improvement in the shipbuilding system. These methods, coupled with a high level of intelligence, college graduates, managing shops, account for Japan's superior productivity in shipbuilding and elsewhere. To revitalize the U.S. shipbuilding industry we need first to start listening.

SP-2: OUTFITTING AND PRODUCTION AIDS

During the recent past, Panel SP-2 research, managed by the Los Angeles Division of Todd Pacific Shipyards Corporation for the National Shipbuilding Research Program, produced two publications, Line Heating - November 1982 and Integrated Hull Construction, Outfitting and Painting (IHOP) - May 1983.[1] Also, in response to demand, Product Work Breakdown Structure - Revised December 1982, was reissued. The latter is regarded by one senior executive as "a framework for change" and is referred to by another as "a truth not to be argued with." All are indicative of Panel SP-2's continuous probing into the extremely effective shipbuilding system developed by Ishikawajima-Harima Heavy Industries Co., Ltd. (IHI). What is surprising is that much of what is disclosed in such publications, has been reported in English over the past 20 years.

One example, "Line Heating - A New Technique Taking the Place of Smith Work" was the first of a number of such papers published by the Society of Naval Architects of Japan in 1961. Yet there was no general interest from U.S. shipbuilders until the National Shipbuilding Research Program stimulated interest in Japanese shipbuilding methods. What is very important about analytically applied line heating, is that its potential cannot be fully exploited without other modern shipbuilding disciplines. "A product work breakdown is the framework of any shipbuilding system which features organized production lines based on the principles of group technology. Statistical control of accuracy is the means used to continuously improve a shipbuilding system by optimizing design details,

work methods and dimensional tolerances. Line heating is the work method specifically developed to productively achieve the tolerances so identified. The three disciplines are interdependent."[2]

Despite visits by U.S. shipbuilders, including some presidents and general managers, to Japanese shipyards during the sixties and seventies, the systemic nature of shipbuilding and the interdependencies of industrial disciplines was hardly, if at all, recognized. Nor were there significant attempts to identify the roles of middle managers. Why?

Recently, the Washington Post reported some pertinent statements by Dr. H. Shinto.[3] He noted that productivity was higher in the U.S. than in Japan during the early fifties when he first visited here. He added, 'Your [U.S.] young engineers who graduated from the university were working in the workshops along with the workers. The engineers knew the production program and they knew how to use machine tools. Because they knew the process in detail, they were able to get greater productivity and high quality." Dr. Shinto went on to say, 'It's that simple. High intelligence is the only source of competitiveness.' Japanese managers responded accordingly.

Further according to the Washington Post, 'At the same time, something was changing in the U.S. -- and Dr. Shinto doesn't quite know why. But the fact is that after graduation, most American engineers now '...get into computerization not into the workshop. When I [Dr. Shinto] visited the U.S. in 1980, I didn't find the same kind of intelligence [as before] in the workshop. I don't know why, but the fact is that it has disappeared and I am quite astonished.'" The Washington Post further quoted Dr. Shinto, "Your people [Americans] are so intelligent, that if you do this [utilize engineers to manage shops], within three to four years, your productivity and quality will go up."

Dr. Shinto specifically advised of the need for more college educated people in middle management in the U.S. shipbuilding industry in 1979. Ever since, the publications relating to Panel SP-2 research advise of the imperative need for:

- "...continuous hiring of recent-graduate engineers who start in shops as process engineers and are systematically transferred to achieve both design and production experiences in hull construction, outfitting and painting," and for
- assigning this educated cadre "...successively as shop managers, senior production engineers and department managers while shifting them between organizations responsible for different types of work."[4]

What is also of great significance is Dr. Shinto's linking together productivity and quality. This linkage was brought to the attention of U.S. shipbuilders by another research publication which addresses statistical control of manufacturing. It describes how accuracy variations in shipbuilding are statistically analyzed for the purpose of monitoring the production processes.[5]

Earlier research publications disclosed how a product work breakdown and group technology enable work relating to the production of different objects in varying quantities, to be rationalized as repetitive work and so made susceptable to statistical analysis.[6][7] However, undoubtedly because engineers do not pervade workshops in U.S. shipyards, there is still insufficient understanding of a shipbuilding system and how the various disciplines are interdependent. The statistical technique, also applied to characteristics other than accuracy and called total quality control (TQC) throughout many industries in Japan, is essential to revitalize shipbuilding in the U.S.

The term TQC may cause production traditionalists to fear more inspection after the fact and a separate staff reporting directly to the general manager as for generally practiced quality assurance (QA). They need to be taught that quality is linked to productivity and that TQC methods are very definitely production aids employed by managers and the supervisors and workers assigned to workshops. Once that idea is accepted, a number of proven management concepts, published by Americans many years ago, fall into place.

Control is distinguished from breakthrough as the former seeks to consolidate gains whereas the latter recognizes that the obligation to improve the production processes never ceases.[8][9] Both are managerial functions. The idea of control is generally understood and employed. The concept of breakthrough, although not new, is not generally used. In terms that foremen understand, "We must improve our methods just to maintain our standard of living. Or we can continue with our current methods and our standard of living will fall."[lO] In Japan where they are extremely effective, quality circles were not created by behaviorial scientists. Their origins are in statistical methods and management initiatives. Quality circles as they have developed in Japan enable managers to more fully utilize the human resource without relinquishing any managerial controls. That is, in an environment of highly organized work, managers employ a very analytical method to first identify specific problems in the manufacturing system and afterwards, they employ quality circles to address solving the problems so identified.

What better way is there for managers to solve a problem in a work unit than to exploit the expertise of the pertinent workers and supervisor who are also trained to apply statistical analysis at their micro level? Dr. K. Ishikawa, known as the father of quality circles in

micro level? Dr. K. Ishikawa, known as the father of quality circles in Japan, can claim as his most notable achievement the expansion of training in statistical methods to include foremen and workers. He regrets that some efforts, such as the Navy's now defunct Zero Defect Program, relied only on slogans and did not provide workers with the necessary analytical tools. Just imagine supporting a football team with cheerleaders and no coaches.

In the context of TQC as practiced in Japan, productivity and quality are linked and quality circles are totally analytical. The foremen and workers who participate regularly employ such aids as histograms, Pareto and Ishikawa diagrams, Y-R charts, etc. In the absence of such worker capabilities, quality circles are talk sessions with inherent limitations.

Management has the responsibility to train people. In Japan, roughly speaking, managers were trained in statistical analysis in the fifties, foremen in the sixties and workers in the seventies. Now as we unfortunately know from the effects, statistical analyses permeate Japanese industries and are vastly responsible for improving productivity. Specifically regarding the shipbuilding industry, the 1967 issue of Technical Progress in Shipbuilding and Engineering, by The Society of Naval Architects of Japan, reported in English that statistical control "epoch makingly" improved quality, laid the foundation of modern ship construction methods and made it possible to extensively develop automated and specialized welding.

REFERENCES

[l] All of the publications for the National Shipbuilding Research Program mentioned in this presentation are end products of the many projects cost shared by Todd. The Program is a cooperative effort by the Maritime Administration's Office of Advanced Ship Development and the U.S. shipbuilding industry. The objective, described by the Ship Production Committee of the Society of Naval Architects and Marine Engineers, is to improve productivity.

[2] "Line Heating - November 1982" for the National Shipbuilding Research Program.

[3] "Hisashi Shinto: Discovering America's Secret", Washington Post, 10 April 1983. Dr. Shinto, acknowledged in Japan as a foremost shipbuilding expert, is currently the president of Japan Telegraph & Telephone Public Corporation.

[4] **Integrated Hull Construction, Outfitting and Painting (IHOP) - May 1983." The same advice was first incorporated in "Outfit Planning - December 1979." Both publications for the National Shipbuilding Research Program.

[5] "Process Analysis Via Accuracy Control - February 1982" for the National Shipbuilding Research Program.

[6] "Product Work Breakdown Structure - Revised December 1982" for the National Shipbuilding Research Program.

[7] "Pipe Piece Family Manufacturing - March 1982" for the National Shipbuilding Research Program.

[8] **Managerial Breakthrough" by J.M. Juran, McGraw-Hill, NYC, 1964.

[9] **Quality, Productivity, and Competitive Position** by W. Edwards Deming, MIT Center for Advanced Engineering Study, Cambridge, MA, 1982.

[10] '*Quality Control for the Foreman", January 1983, p.8, by the Union of Japanese Scientists and Engineers.

SP-1 AND 3: FACILITIES AND ENVIRONMENTAL EFFECTS

R. A. Price
Research and Development Program Manager
Avondale Shipyards, Incorporated
New Orleans, LA

Prior to his present position Mr. Price served as Senior Industrial Engineer, Ground Support Equipment, for the Boeing Company Aerospace Division. He is registered in the Smithsonian Institution and the Library of Congress for Outstanding Achievements in the Apollo Space Program. He is certified as an Engineering Technologist by the National Certification Board in Washington, D.C. Mr. Price is also the President of the American Institute of Plant Engineers, New Orleans Chapter 67.

Mr. Price holds a degree in industrial engineering from Tacoma Tech, and an Associates degree in civil engineering. He has attended Tulane University, Louisiana State University, University of Alabama, and University of Wisconsin in a continuing education program.

ABSTRACT

The objective of this program is to assist U.S. shipyards in reducing cost and construction time through the development and implementation of efficient equipment and facilities and improved work flow arrangements. The program addresses all phases of ship construction, including fabrication, assembly erection, outfitting and required shipyard services. The program also includes Environmental Effects (Panel SP-3) considerations involved in facility expansion, and modifications, operations and ship production from a regulatory point of view.

PANEL SP-1 SHIPYARD FACILITIES AND ENVIRONMENTAL EFFECTS

The objective of this program is to assist U.S. shipyards in reducing cost and construction time through the development and -implementation of efficient equipment and facilities and improved work flow arrangements. The program addresses all phases of ship construction, including fabrication, assembly erection, outfitting and required shipyard services. The program also includes Environmental Effects (Panel SP-3) considerations involved in facility expansions, and modifications, operations and ship production from a regulatory point of view.

The Ship Production Committee of the Society of Naval Architects and Marine Engineers re-activated Panel SP-1 Facilities July 20, 1973.

Avondale Shipyards, Inc. accepted the chairmanship and agreed to he the primary sponsor. Presently we have 23 active members from 17 shipyards including MarAd and Navy representation.

We have completed eleven projects, three are in work, six are requested for FY 83 and are in the funding cycle, five are proposed for FY 84, and six abstracts are prepared for FY 85.

We have held six demonstrations, five were addressing environmental. issues and one was the Pipe Shop, including the software systems.

We have held three two-day seminars during 1982 which addressed Avondale Shipyards IHI implementation effort. Two are to be scheduled at the conclusion of the process lanes and IHI implementation projects.

There has been some discussion about presentations showing post project completion results. I thought we would do one today using the Pipe Shop discussing the facility, spool design, the management system and the people who use these systems.

The Pipe Shop is designed to produce 150 pipe spools per day, one shift, it consist of the following:

- A pipe storage system
- With a semi-automatic unloading system
- Through push button control
- External Cleaning
- Internal Cleaning
- External and Internal Coating System
- Conveyor to Transporting Pipe to the saw
- Automatic Measuring
- For cutting pipe the length
- Plasma gas cutting
- End preparation system of producing bevels
- Pipe End Cleaner to remove the shop primer prior to welding
- Automatic unloading and loading systems
- Semi-Automatic weld neck flange welding system
- Semi-Automatic slip on flange welding system
- A collaring system for 90° branches for pipe through schedule 40 with hot work A
- Semi-Automatic specialwelding devices
- Special devices to reduce manual handling during the work process
- Two computers control bending machine capable of 2 x the diameter bends with the pre-coated pre-flanged pipe maintaining bolt-hole orientation.
- Special motorized dollies
- Specialized conveyoring systems

Early in the design phase, it was determined that a major change would have to be made in the method that was used in the design of piping system, also in shop control.

The management system was designed to meet the following objectives:

- To provide a Manufacturing System that would be tightly coupled with the CADAM system.
- To provide a total system that would assist in the smooth operation of the Pipe Shop.

- To provide a system that would be capable of handling our increased Productivity in the Pipe Shop.
- Provide a system that would mesh into a production&planning and schedule system.

The requirements were determined and are as follows:

- To establish and maintain a current Bill of Material as originated by Engineering.
- To determine how much material is needed of each type and on what date.
- To establish a means to maintain accurate inventories.
- To produce a process or route sheet for each pipe detail that is to be produced.
- To Schedule Pipe Details to be produced.
- To provide a cutting list for Pipe details to be manufactured.
- To provide a status of machine loads based on actual schedule of Pipe Details,
- To provide location control for Pallet storage.

The IBM Copies software packages are used interacting with the Lockheed CADAM System for our shop management system.

Lockheed and Avondale Shipyards cooperated in the development of the CADAM Piping Module, Avondale supplied the expertise in piping, identifying requirements and functions while Lockheed supplied the programming expertise.

As a first step, the total ship structure is sectionalized. Then each craft draws a 2 dimensional view of the craft's component within that section. Here we see the piping component.

The ventilation ducts have been added to the section we are using as an example.

Mechanical machinery is now superimposed.
Finally, electrical wireways are brought in.
All crafts are combined within the limiting structure, This is done by the composite department and checked visually for possible interferences,

lay out and compatibility with adjacent areas.

After composite department finishes checking, individual crafts drawings are sent back to responsible departments for follow-up work) *Here* the limiting framework within the compartment has been removed as a first step.

Wireways have been routed to the electrical department.

Mechanical machinery is then routed to mechanical department.

Here we see that ventilation has left, it has been routed to duct work fabrication. Only piping is left.

This is a close-up of the piping that exists within the area that we started with.

This is one piping run from the previous slide. This will serve as an example to demonstrate how it will become a fabrication drawing. I will refer to this as a pipe detail or P.D. This drawing is still 2 dimensional and has been generated up to this point using basic CADAM. A
The CADAM drawing can be interrogated to determine the X and Y coordinates of end points, end points and fitting hand points. After these coordinates are established, the Z coordinates of these points can be determined from scaled drawings or auxiliary CADAM views.

A catalog of piping parts carrying a31 attribute data is then used to attac attribute data to the components that will connect the 3-D points.

Here we see the pipe run connected to the end and bend points.

This particular pipe detail has a flange at the upper end. In order to describe this flange and how it is to be oriented, the catalog is again consulted. The catalog is searched for the proper flange to be placed at the upper end of the pipe detail and the correct entry selected.

Once this is done, the flange is attached to the fitting "hang point" using the light pen to select the desired location.

TO EXPLAIN HOW THE CATALOGS WORK:

These are the specifications for coding the measurements of the individual component, in this instance a flange.

This is the flange created by CADAM, not by the operator from the coding specification just shown. This view shows the face of the flange.

This is the same flange that has been rotated. Note the figure is 3D.

This is another component. This time a valve.

These are 3 D views of the valve symbol.

Now back to our P.D. The P.D. (now containing attribute data) is uniquely named i.e., PD1, PD2, etc.

The double line option is now used.

We will rotate the original view in combined X, Y and Z axis by 10 degrees increments. (Show next nine slides.)

This is the attribute data that exists within the CACAM module. It-can be displayed upon operator request. It is also used within CADAM for any NC function as it is the X, Y and Z coordinates of each point.

Going back to our P.D. we will show how we go from the 3 dimensional drawing to a 2 dimensional shop drawing.

The two drawingsseem vastly different, this is because all the processing happens within CADAM, the only operator intervention is to identify which P.D. and format is to be converted into a shop drawing. As can be seen 1)attribute data is scanned to generate a bill of material 2) all dimensions are calcuated by CADAM from 3D environment 3) attribute data provides input to calculate cut lengths as well as wet and dry weight of P.D. Additional information shown comes from pre-stored formats.

If the automatically generated "best view" does not provide sufficient information, additional views can be requested.

Here dimensions have been re-arranged for best understanding and use in fabrication.

Shop routing information is then added.

Now that we are satisfied, this is a good working drawing, the drawing is plotted and is ready for shop fabrication.

This facility is designed to produce 150 spool per day utilizing the CADAM system for spool design and the Copic system for management and control.

We projected a 39.8% savings in labor and material. As of January 1983 our actual savings is 41.8%. This is slightly better than the projected.

However, we anticipated 55 to '60 percent, thinking our actual should be about 66.6%. We were not achieving our goal.

We asked ourselves why? and how could we obtain our anticipations?

With this in mind, we established a Manufacturing Engineering group of four very qualified experienced people. A

Gave the group a character to develop:

- o Systems for implementing changes

The importance of this function was discovered when we were told by the shop that the saw was a bottle neck. It turned out that the shop thought, with good intentions the $150.00 blade could be replaced with a $95.00 blade. This was a real cost reduction. Except the change did not consider the saw as part of a system. Now it takes 10 to 15 minute's to cut a pipe and we cannot use the variable speed controls. This has been corrected.

Procedures, work sequence and methods are being developed through a coordinated effort looking at each item, viewed as part of an intergrated system.

We will now go through some things that were observed and corrected which demonstrates the value of our manufacturing engineering approach as applied to the pipe shop some other areas

- o This is our Exxon tanker deck piping erection area.
- o Why three or four men to install *one* small piece; why not pre-assemble it.
- o Pre-assembly could eliminate this condition.
- o Field fabricated hangers.
- o Field fabricated brackets.
- o More field designed hangers, this shows that the foreman is willing, however, this design work should and is now being accomplished in Engineering where it should be.
- o Why not pre-install all of these valves. It will reduce crane time, installation time, and improve safety.
- o A simple coil.
- o Reverse the coil and you delete all of the welding shown here except two joints.
- o Keep the valve faces clean and we do not have the added costs.
- o Notice that no spools are on the floor in this shop.
- o This was our shop.
- o Orderly fitting

- This is another good one.
- This was ours.
- Notice the tray on the bottom of the dolly.
- This was ours.
- It took this man 30 minutes to find his part.
- The pipe is not palletized in use order. (sequence of installation.)
- We should have installed the three valves prior to hanging the manifold. "Safety Time".
- Material movement is expensive. They are loading parts for site delivery here.
- It has been received at the site and is screened again.
- This area is screening a third time and some items are missing. Material picking must be well organized with good attention to schedules and items to be delivered.
- The flanges were installed in the package assembly building. This is out of sequence and costly.
- Items delivered to the installation site with not enough attention to the schedule.
- This is about a three month supply of fitting instead of a one week supply.

Most of these things are corrected. They would not have been identified and corrected without our Manufacturing Engineering group effort.

Getting back to the Pipe Shop,

We are now in a position to identify and solve problems that will lead us to our anticipated three manhours per spool in the pipe shop

We are currently fabricating pipe spools at 4.5 manhours and anticipate meeting our target of three manhours per spool in the near term.

SP-4: DESIGN/PRODUCTION INTEGRATION

F. B. Barham, Jr.
SPC Program Manager
Newport News Shipbuilding
Newport News, VA

Mr. Barham is employed at Newport News Shipbuilding where he is assigned to the Advanced Technology Department. He joined Newport News Shipbuilding in 1953. He has on-the-board and first line supervisory experience in engine room piping system design, component design and procurement and work packaging. He has also served his company as head of the Chief Engineers Staff Office and manager of its Design Material and Support Department. Mr. Barham has represented Newport News Shipbuilding on a number of Navy and industry task groups dealing with integrated logistic support and has been a member of SNAME since 1963.

ABSTRACT

This presentation will provide an overview of the Design/Production Integration Panel beginning with a look at the panel's background and its basic concept that design is the first step in the overall interactive production processes. The panel's method of operation will be outlined and its integrated program of related projects will be presented. The current status of panel work will be included.

SOCIETY OF NAVAL ARCHITECTS & MARINE ENGINEERS

SHIP PRODUCTION COMMITTEE

PANEL SP-4

DESIGN/PRODUCTION INTEGRATION

OVERVIEW

1983

GOOD MORNING

I AM PLEASED TO HAVE THIS OPPORTUNITY TO TALK WITH YOU ABOUT THE SHIP PRODUCTION COMMITTEE'S PANEL ON DESIGN PRODUCTION INTEGRATION, THE PANEL DESIGNATED AS SP-4.

IN THE TIME WE HAVE TOGETHER TODAY I WILL PROVIDE A BIT OF THE PANEL'S BACKGROUND, TELL YOU HOW IT OPERATES AND DESCRIBE ITS PROGRAM OF WORK. BUT ALL THE WHILE MY REAL INTENT WILL BE TO CONVINCE YOU THAT OUR INDUSTRY, THROUGH SP-4, IS TAKING THE OPPORTUNITY TO RESPONSIBLY ADDRESS RESEARCH OPPORTUNITIES THAT CAN HAVE A DRAMATIC IMPACT ON SHIPBUILDING PRODUCTIVITY. PLEASE KEEP THIS IN MIND AS WE START WITH THE PANEL'S BACKGROUND.

BACKGROUND

THE DESIGN PRODUCTION INTEGRATION PANEL, SP-4, WAS ESTABLISHED BY THE SHIP PRODUCTION COMMITTEE OF THE SOCIETY OF NAVAL ARCHITECTS AND MARINE ENGINEERS (SNAME) ON APRIL 23, 1981. AFTER THAT THE INDUSTRY PARTICIPATED IN TWO PRE-CONTRACT MEETINGS REFINING ITS PROPOSED PROGRAM AND LEADING TO INITIAL PROGRAM FUNDING VIA A MARITIME ADMINISTRATION CONTRACT WITH NEWPORT NEWS SHIPBUILDING ON JULY 30, 1982. ATTENDANCE AT THE PRE-CONTRACT MEETINGS RANGED FROM 24 TO 39 IN

NUMBER AND REPRESENTATIVES WERE PRESENT FROM 14 SHIPYARDS, THE SHIP PRODUCTION COMMITTEE, MARAD, NAVSEA, 4 DESIGN AGENTS, 2 CONSULTING FIRMS AND AN AEROSPACE CORPORATION.

THE PANEL AND 'ITS PROGRAM ARE THE RESULT OF RECOGNITION BY THE SHIPBUILDING INDUSTRY THAT DESIGN SHOULD BE THE FIRST STAGE OF AN INTEGRATED, INTERACTIVE OVERALL PRODUCTION PROCESS. IMPROVEMENTS IN THE INTERFACES AND COMMUNICATIONS BETWEEN DESIGN AND PRODUCTION ARE ONLY A PARTIAL SOLUTION. THE NEED IS FOR FULL INTEGRATION OF THE TWO FUNCTIONS WITH DESIGN BEING CONSIDERED THE FIRST STEP IN THE PRODUCTION SEQUENCE.

PANEL SP-4 PROVIDES A MUCH NEEDED FORUM FOR IMPORTANT DESIGN INVOLVEMENT IN THE WORK OF THE SOCIETY'S SHIP PRODUCTION COMMITTEE. THIS INVOLVEMENT IS NECESSARY AND INHERENT IN THE CONCEPT THAT DESIGN IS THE FIRST STAGE OF PRODUCTION. THE PANEL IS ALSO DESIGNED FOR THE INTERACTION OF OWNERS, GOVERNMENTAL AGENCIES, DESIGN AGENTS, UNIVERSITIES AND SHIPYARDS. THE INTERACTION BETWEEN THESE PARTIES AND THEIR FOCUS ON THE INTEGRATED SHIP PRODUCTION PROCESS PROVIDES THE BASIS FOR PRODUCTIVE PANEL OUTPUT DESIGNED TO INCREASE PRODUCIBILITY, PRODUCTIVITY AND QUALITY.

THE PANEL'S WORK IS DIRECTED TOWARD LOWER OVERALL COSTS, REDUCED OVERALL DETAIL DESIGN AND CONSTRUCTION TIME BETWEEN CONTRACT AWARD AND DELIVERY AND INCREASED QUALITY. THIS WORK IS BASED ON THE PREMISE THAT INITIAL PLANNING AND DESIGN ACTIONS ARE THE PREDOMINANT DETERMINANTS OF FINAL COSTS, CONSTRUCTION TIME AND QUALITY.

OPERATION

BASED ON THE ABOVE, THE PANEL HAS, FOR CONVENIENCE SAKE, CLASSIFIED ITS WORK AS EITHER,

0 DESIGN FOR PRODUCTION

OR

0 CADCAM

THE CADCAM CLASSIFICATION IS CONSIDERED TO INCLUDE COMPUTER INTEGRATION OF THE DESIGN PRODUCTION SYSTEM VIA

0 COMPUTER AIDED DESIGN

0 COMPUTER AIDED PROCESS PLANNING

0 COMPUTER AIDED MANUFACTURING

MORE GENERALLY STATED, THE WORK OF THE PANEL ADDRESSES THE SHIP DETAIL DESIGN AND PLANNING EFFORTS, INTEGRATION OF THOSE EFFORTS INTO ONE PRODUCTION PROCESS AND THE TOOLS INVOLVED.

THE PANEL QUICKLY RECOGNIZED THAT THE WORK AREAS JUST DEFINED INCLUDED IMMENSE RESEARCH OPPORTUNITIES AND THAT IT WOULD BE A NECESSITY TO ESTABLISH A REASONABLE METHOD OF SELECTING PROJECTS. THEY ALSO RECOGNIZED THE NECESSITY TO DEVELOP A MODUS OPERANDI THAT WOULD INSURE THE EXECUTION OF 'A PROGRAM THAT WOULD COOPERATE WITH AND TAKE ADVANTAGE OF RELATED RESEARCH EFFORTS.

WITH THIS IN MIND, THE PANEL ESTABLISHED THE FOLLOWING PROJECT OBJECTIVES:

0 THE PROJECT MUST BE DESIGNED TO RESPOND TO AN INDUSTRY-WIDE NEED.

OUR WORK IS SPAWNED BY PROBLEMS EXPERIENCED IN THE INDUSTRY OR BY OPPORTUNITIES TO IMPROVE THE INDUSTRY'S PERFORMANCE. MOST OF OUR PROJECTS INCLUDE AN UP-FRONT REQUIREMENT THAT THE INDUSTRY BE CANVASSED TO DETERMINE THAT THERE IS TRULY INDUSTRY NEED AND SUPPORT FOR THE PROJECT. IN THESE INSTANCES, PANEL APPROVAL IS REQUIRED PRIOR TO PROCEEDING WITH THE PROJECT. THE PROJECT WILL BE CANCELLED WHEN INTEREST AND NEED CANNOT BE DEMONSTRATED.

0 PROJECTS SHOULD SEARCH FOR EXISTING SOLUTIONS.

MOST SP-4 PROJECTS 'INVOLVE A LITERATURE SEARCH AND INCLUDE A REQUIREMENT TO SEEK EXISTING ANSWERS FROM OTHER INDUSTRIES. USUALLY MUCH PRODUCTIVE WORK CAN BE DONE IN APPLYING EXISTING TECHNOLOGY TO THE SHIPBUILDING PROCESSES. HOWEVER, WHILE WE TAKE CARE NOT TO DO RESEARCH FOR RESEARCH SAKE, WE DO TRY TO KEEP ABREAST OF EVOLVING DISCIPLINES AND WELCOME THE OPPORTUNITY TO APPLY THEM TO OUR NEEDS.

0 PROJECTS MUST YIELD GENERIC RESULTS.

OUR PROJECTS MUST BE OF VALUE TO A SIGNIFICANT NUMBER OF YARDS; THEY CANNOT BE DESIGNED TO SOLVE ONLY A SINGLE YARD'S PROBLEM. SP-4'S PROGRAM DEALS PRIMARILY WITH PROCESSES AND TECHNOLOGY; IT IS NOT A PROGRAM OF EQUIPMENT OR MATERIAL ACQUISITION.

0 RESULTS MUST BE PRESENTED AND PUBLISHED.

ALL PROJECTS MUST BE THOROUGHLY DOCUMENTED AND THE RESULTS MADE AVAILABLE TO THE INDUSTRY. IN MOST INSTANCES REGIONAL PRESENTATIONS ARE REQUIRED. IT IS IMPORTANT TO US THAT THE INDUSTRY REALIZE THE INTENT, CONTENT AND USE OF A PROJECT'S RESULTS AND WE FEEL THIS CAN MOST EFFECTIVELY BE DONE FACE TO FACE.

WITH THE PROJECT OBJECTIVES IN PLACE, IT WAS THEN NECESSARY TO DEVELOP A METHOD OF OPERATION INSURING THEIR APPLICATION TO THE PANEL'S WORK. IT WAS 'NECESSARY TO TAKE STEPS TO SEE THAT THE OBJECTIVES WERE REASONABLY, RESPONSIBLY AND CONSISTENTLY APPLIED IN DEFINING A LONG RANGE PLAN, IN SELECTING AND CONTRACTING FOR INDIVIDUAL PROJECTS AND IN PERFORMING RESULTING WORK. THE SP-4 GUIDELINES FOR PROGRAM MANAGEMENT WERE DEVELOPED TO MEET THESE NEEDS. THESE GUIDELINES WILL BE INCLUDED IN THE PROCEEDINGS FOR YOUR REVIEW AND USE AND WILL NOT BE PRESENTED VERBATUM AT THIS TIME. HOWEVER, I DO CALL YOUR ATTENTION TO THEIR PRINCIPLE ELEMENTS, AS FOLLOWS:

0 PROGRAM MANAGER DUTIES

ALL OF THE USUAL MANAGEMENT DUTIES ARE INCLUDED AND IN ADDITION PARTICULAR CARE HAS BEEN EXERCISED TO INCLUDE RESPONSIBILITIES TO MAINTAIN LIAISON WITH RELATED ORGANIZATIONS AND ACTIVITIES. IT IS THROUGH PROPER USE OF THIS LIAISON THAT THE PANEL CAN PURSUE RESPONSIBLE COOPERATIVE RESEARCH EFFORTS FOR SYNERGISTIC BENEFITS.

0 PROJECT REVIEW BOARD (PRB)

THE GUIDELINES ESTABLISH A FIVE MEMBER PROJECT REVIEW BOARD. THE PROJECT REVIEW BOARD, KNOWN AS THE PRB, REVIEWS ALL POTENTIAL PROJECTS AND RECOMMENDS WHICH SHOULD BE INCLUDED IN THE SP-4 PROGRAM. THEY ALSO REVIEW ALL PROJECTS AND PROPOSALS REGARDING CONTRACTING, RECOMMENDING SUITABLE PROPOSALS, POSSIBLE SPONSORS AND ACCEPTABLE SUBCONTRACTORS.

THE PRB CONSISTS OF A REPRESENTATIVE CROSS SECTION OF THE PANEL AND IS REQUIRED TO BE CONTINUALLY ALERT TO OUR OBJECTIVES AND PRINCIPLES OF OPERATION. HOWEVER, ALL POTENTIAL PROJECTS, PROPOSALS AND PRB ACTION ARE PRESENTED TO THE ENTIRE PANEL FOR ITS APPROVAL.

THE PRB IS A GROUP OF SUCH SIZE AS CAN REASONABLY BE EXPECTED TO ACCOMPLISH DETAIL INVESTIGATIVE WORK WHILE REPRESENTING THE CHARACTER OF THE PANEL. THE REQUIRED PANEL APPROVAL RESULTS IN AN INTERACTION THAT INSURES THAT OUR GOALS AND PRINCIPLES OF OPERATION ARE NOT COMPROMISED.

0 LONG RANGE PLAN

THE GUIDELINES REQUIRE THE PROGRAM MANAGER TO DRAFT AND MAINTAIN A LONG RANGE PLAN FOR THE PANEL. THE PLAN MUST REFLECT:

THE CURRENT FISCAL YEAR PROGRAM.
THE TENTATIVE FISCAL YEAR PROGRAM FOR THE NEXT YEAR.
CANDIDATE PROJECTS FOR FUTURE ACTION.
WORK REMAINING FROM PAST YEARS.

THE PLAN IS REVIEWED AND UPDATED BY THE PANEL ANNUALLY.

0 PRIORITIES

PRIORITIES ARE ESTABLISHED WITHIN THE LONG RANGE PLAN AND 'PANEL ACTION TO REVISE THE PLAN IS REQUIRED IN ORDER TO INTRODUCE NEW PROJECTS.

PROJECTS REQUIRING MULTI-YEAR FUNDING RECEIVE PRIORITY OVER NEW PROJECTS IN THE CARRYOVER YEAR(S).

0 PANEL APPROVAL

THIS IS THE KEY TO OUR ENTIRE OPERATION.

THE GUIDELINES LAY OUT DUTIES FOR THE PROGRAM MANAGER AND SINCE THEY ARE PUBLISHED THERE IS A UNIVERSAL UNDERSTANDING REGARDING RESPONSIBILITIES AND AUTHORITY.

A PROPOSAL REVIEW BOARD PERFORMS DETAIL WORK THAT ALLOWS EFFECTIVE ACTION ON A NUMBER OF MATTERS IN THE LARGER FORUM OF THE PANEL.

THE PROGRAM MANAGER DRAFTS A LONG RANGE PLAN AND MAINTAINS STATUS: THE RULES FOR PRIORITIES ARE LAID OUT,

BUT

IN ALL INSTANCES PANEL APPROVAL IS REQUIRED. JUST AS THE FIRST PROJECT OBJECTIVE WAS TO RESPOND TO THE INDUSTRY, THE FIRST CONCERN OF SP-4 IS THAT ITS PROGRAM AND METHOD OF OPERATION RESPOND TO ITS INDUSTRY REPRESENTATIVES.

THE PANEL'S OPERATION THEN IS THROUGH ESTABLISHED GUIDELINES DESIGNED TO INSURE REASONABLE, RESPONSIBLE AND CONSISTENT APPLICATION OF ITS WORK OBJECTIVES. NOW WE FIND THAT THE APPLICATION OF THESE GUIDELINES NATURALLY RESULTS IN:

COMMUNICATION - BETWEEN ORGANIZATIONS AND WITHIN THE PANEL.

COORDINATION - OF EFFORTS WITHIN THE PANEL AND AMONG RELATED ORGANIZATIONS

AND

COOPERATION - IN PERFORMING RESEARCH, AGAIN, BOTH WITHIN OUR OWN PANEL AND WITH OTHER INVOLVED ORGANIZATIONS

THROUGH THIS COMMUNICATION, COORDINATION AND COOPERATION IN RESEARCH WE ARE FINDING EXCITING OPPORTUNITIES TO ACHIEVE WIDELY APPLICABLE RESULTS WITH EVER INCREASING CHANCES FOR SYNERGISTIC BENEFITS.

ALL RIGHT, UP TO THIS POINT I'VE PROMISED YOU THAT WE HAVE A PANEL FOUNDED ON AN INDUSTRY RECOGNIZED NEED. THAT IN AN EFFORT TO ACT RESPONSIBLY WE HAVE LAID OUT OBJECTIVES AGAINST WHICH WE MUST MEASURE OUR WORK AND HAVE OUTLINED A METHOD OF OPERATION WHERE THIS WORK CAN BE DEFINED AND EXECUTED IN ACCORDANCE WITH THE WILL OF THE INDUSTRY.

NOW ITS TIME TO LOOK AT RESULTS.

FUNDING FOR SP-4 BEGAN IN 1982 AND RESULTED IN THE PROGRAM SHOWN ON THIS ILLUSTRATION. ALSO SHOWN IS THE PROPOSED FY 83 PROGRAM.

THE DESIGN FOR PRODUCTION MANUAL PROJECT IS A TWO PHASE EFFORT. PHASE I HAS EXPLORED INDUSTRY NEED AND SUPPORT FOR SUCH A MANUAL AND PRELIMINARY EVALUATIONS INDICATE BROAD INTEREST AND SIGNIFICANT NEED. PHASE I HAS ALSO DEVELOPED A PROPOSED MANUAL CONTENT AND FORMAT. IT IS ANTICIPATED THAT PHASE II WILL BE AUTHORIZED AND THE. MANUAL PRODUCED IN FY 83.

THE GROUP TECHNOLOGY PARTS CLASSIFICATION AND CODING SYSTEM PROJECT IS ALSO A TWO PHASE PROJECT SCHEDULED IN THE SAME GENERAL TIME FRAME AS THE DESIGN FOR PRODUCTION MANUAL PROJECT.

THE FISCAL YEAR 1982 PROGRAM IS ROUNDED OUT WITH A PROJECT TO RESEARCH STANDARD SOFTWARE TOOLS AND THE FY 83 PROGRAM IS COMPLETED WITH TWO SINGLE YEAR PROJECTS.

0 INCORPORATING MODERN SHIPBUILDING TECHNOLOGY EARLY IN THE DESIGN CYCLE

AND

0 COMPUTER AIDED PROCESS PLANNING

THIS TWO YEAR PROGRAM NOT ONLY RESPONDS TO DEMONSTRATED INDUSTRY NEEDS AND HAS THE POTENTIAL TO INCREASE PRODUCTIVITY IN SHIPBUILDING BUT BECAUSE OF THE MUTUALLY SUPPORTIVE NATURE OF THE PROJECTS, IMPLEMENTATION FEASIBILITY IS ENHANCED AND POTENTIAL BENEFITS ARE INCREASED.

CONSIDER THE FOLLOWING:

0 THE DESIGN FOR PRODUCTION MANUAL, WITH THE HELP OF THE PROJECT TO INCORPORATE MODERN SHIPBUILDING TECHNOLOGY EARLY IN THE DESIGN CYCLE, WILL COVER DESIGN INVOLVEMENT FROM CONCEPT DESIGN THROUGH DETAIL DESIGN.

0 THE GROUP TECHNOLOGY PARTS CLASSIFICATION AND CODING SYSTEM PROJECT WILL NOT ONLY PROVIDE THE INDUSTRY WITH A GROUP TECHNOLOGY IMPLEMENTATION TOOL, BUT WILL PROVIDE THE ABILITY TO AUGMENT AND EXPAND CADCAM UTILIZATION IN THE SHIPBUILDING INDUSTRY. THE COMPUTER AIDED PROCESS PLANNING PROJECT WILL MAKE USE OF THE GROUP TECHNOLOGY PARTS CLASSIFICATION AND CODING SYSTEM PROJECT RESULTS TO FURTHER EXPAND THE INTEGRATION OF DESIGN AND PRODUCTION. WHILE THESE TWO PROJECTS INTERACT TO EXPAND THE COMPUTERIZATION OF THE SHIP DESIGN AND PRODUCTION DISCIPLINES THE RESEARCH STANDARD SOFTWARE TOOLS PROJECT WILL SEEK WAYS TO INTEGRATE THE EVOLVING AREAS OF AUTOMATION THROUGH THE PROPER USE OF SOFTWARE TOOLS.

NOW TO DEMONSTRATE OUR SEARCH FOR SYNERGISTIC RESULTS THROUGH COOPERATIVE RESEARCH LET'S TAKE A CLOSER LOOK AT THE DESIGN FOR PRODUCTION MANUAL PROJECT.

THE MANUAL IS PRESENTLY PROPOSED TO BE A MULTI-VOLUME WORK PUBLISHED IN LOOSE LEAF FORM. THE PROPOSED MANUAL OUTLINE HAS BEEN DEVELOPED AND IT IS QUITE EXTENSIVE. IT'S COVERAGE IS INTENDED TO INCLUDE, BUT IS NOT LIMITED TO:

0 CONCEPTS AND GENERAL STATEMENTS REGARDING THE OBJECTIVE OF THE MANUAL; THE PRODUCTIVITY GAP--U. S. VS OVERSEAS; FACTORS AFFECTING PRODUCTIVITY; TERMINOLOGY, PRINCIPLES, DEFINITIONS AND OBJECTIVES OF DESIGN, INDUSTRIAL AND PRODUCTION ENGINEERING AND PLANNING. GUIDELINES FOR IMPLEMENTATION OF DESIGN FOR PRODUCTION PRACTICES ARE INCLUDED.

0 METHODS OF INTEGRATING DESIGN AND PRODUCTION. COVERAGE HERE WILL OUTLINE PRODUCIBILITY OBJECTIVES, STANDARD TERMS OF REFERENCE FOR DESIGN AGENTS, IMPACT OF FACILITIES ON DESIGN, COMMUNICATION BETWEEN DESIGN AND PRODUCTION, INPUTS OUTPUTS AND PROCEDURES FOR EACH STAGE OF DESIGN, THE NECESSITY TO DOCUMENT FACILITY CAPABILITY, ETC.

- THE APPLICATION OF PRODUCTION ENGINEERING. HERE COVERAGE WILL INCLUDE INPUTS TO AND OUTPUTS FROM THE PRODUCTION ENGINEERING FUNCTION, THE NEED TO DEVELOP STANDARD INTERIM PRODUCTS, PRODUCTION PROCESS STANDARDS, THE APPLICATION OF GROUP TECHNOLOGY, ETC.

OBVIOUSLY A WORK OF SUCH SCOPE WILL INCLUDE AREAS OF SIGNIFICANCE TO A WIDE VARIETY OF PEOPLE AND ORGANIZATIONS. IT IS JUST AS OBVIOUS THAT COMPLETE COVERAGE OF ALL POSSIBLE SUBJECTS IN THE ORIGINAL ISSUE WITH A ONE YEAR EFFORT IS NOT PRACTICAL. HOWEVER, A SURPRISING AMOUNT OF WORK CAN BE DONE THROUGH THE COOPERATION OF AGENCIES AND THE INTERACTION OF PROJECTS. CONSIDER THE FOLLOWING:

- THE PREVIOUSLY MENTIONED SP-4 PROJECT REGARDING THE INCORPORATION OF MODERN SHIPBUILDING TECHNOLOGY EARLY IN THE DESIGN CYCLE IS NOW DESIGNED TO BE WORKED IN CLOSE COOPERATION WITH THE MANUAL PROJECT USING A COMPATIBLE FORMAT AND COVERING CONCEPT DESIGN THROUGH CONTRACT DESIGN.

- THE AREA OF PRELIMINARY DESIGN IS ALSO OF PRIMARY CONCERN TO THE SNAME SHIP DESIGN COMMITTEE. STEPS HAVE BEEN TAKEN TO ESTABLISH PROPER LIAISON WITH AND INPUT FROM THE SDC. IT IS ANTICIPATED THAT THE INCORPORATING MODERN SHIPBUILDING TECHNOLOGY EARLY IN DESIGN PROJECT, COMPLETE WITH SDC INPUT, WILL BE PUBLISHED AS A PART OF THE DESIGN FOR PRODUCTION MANUAL.

- LIAISON WITH SP-9, THE EDUCATION PANEL, HAS ALSO BEEN ESTABLISHED. HERE WE PLAN TO EXPLORE THE POSSIBILITIES OF USING THE MANUAL AS A UNIVERSITY LEVEL TEXT. PRELIMINARY INVESTIGATIONS INDICATE THAT INSTRUCTION NOTES FOR COURSE MATERIAL CAN BE ECONOMICALLY ADDED. IF THIS IS DONE, THE VALUE OF THE MANUAL TO THE INDUSTRY WILL BE REALIZED NOT ONLY THROUGH IMPROVED BASIC SHIP DESIGN, IN YARD TRAINING AND IN NEW SHIPBUILDING PRACTICES, BUT ALSO THROUGH A NEW GENERATION OF NAVAL ARCHITECTS AND MARINE ENGINEERS THAT ARE ALSO SHIPBUILDERS.

- SP-7 HAS IDENTIFIED THE NEED TO DEVELOP PRODUCTIVE WELD JOINT DESIGNS. WELDING WILL BE ADDRESSED IN THE MANUAL AND APPROPRIATE INTERFACE WILL BE ESTABLISHED WITH SP-7 TO DETERMINE IF PLANNED COVERAGE WILL SATISFY THE NEEDS IDENTIFIED BY BOTH PANELS.

- SP-4 HAS IDENTIFIED PROJECTS FOR FY 82, 83 AND 84 THAT WILL BE TOUCHED ON IN THE MANUAL. HOWEVER, THE DETAIL OF COVERAGE WHILE APPROPRIATE FOR THE INITIAL ISSUE OF THE MANUAL, DOES NOT ELIMINATE THE NEED FOR THE OTHER PROJECTS. IN FACT, THE MANUAL WILL LAY THE FOUNDATION FOR DETAIL STUDIES IN AREAS SUCH AS,

- CLASSIFICATION AND CODING
- COMPUTER AIDED PROCESS PLANNING
- REQUIRED CONTENT OF DRAWINGS

IT IS ANTICIPATED THAT THESE PROJECTS WILL FIND A HOME IN THE PUBLISHED LOOSE LEAF MANUAL OR CREATE ADDITIONAL VOLUMES.

THE PANEL IS PLEASED WITH THE WAY THE DESIGN FOR PRODUCTION MANUAL IS TAKING SHAPE BUT IS NOT SATISFIED TO SIT BACK AND RELAX. TOO MANY PROBLEMS HAVE TO BE SOLVED AND TOO MANY OPPORTUNITIES HAVE TO BE EXPLORED. FOR FY 84 WE HAVE TENTATIVELY IDENTIFIED A PROGRAM THAT INCLUDES THE FOLLOWING PROJECTS.

0 REQUIRED CONTENT OF DRAWINGS

THIS PROJECT PROPOSES TO INVESTIGATE DRAWING CONTENT FROM THE POINT OF VIEW OF THE NEEDS OF PRODUCTION PERSONNEL INVOLVED IN MODERN SHIPBUILDING TECHNIQUES. IT WILL ALSO LOOK AT THE USE OF DESIGN OUTPUT BY COMPUTER-DRIVEN NUMERICAL CONTROL MACHINERY TO DETERMINE IF THE ESTABLISHED FORMS OF PRESENTING DATA ARE STILL USEFUL OR IF THEY MAY NOW BE OBSOLETE AND UNNECESSARY.

0 INFORMATION FLOW REQUIREMENTS FOR DESIGN AND PROCUREMENT

THIS PROJECT PROPOSES TO DEVELOP THE USES OF DESIGN AND PROCUREMENT DATA, RESULTING INTERFACES, TIMING AND DEGREE OF SIGNIFICANCE. THE RESULTING RESEARCH IS INTENDED TO DEFINE THE NECESSARY INFORMATION REQUIREMENTS IN A TIME-SOURCE-USER RELATIONSHIP. A PREFERRED FLOW FOR AN EXISTING SHIP DESIGN TO SUPPORT MODERN SHIPBUILDING METHODS WILL BE PROVIDED.

0 INTERFACE IMPACTS, SYSTEM TO ZONE TRANSITION

HERE WE PROPOSE TO EXAMINE A SMALL NAVY COMBATANT THAT HAS BEEN BUILT BY USING BOTH THE SYSTEM AND THEN THE ZONE ORIENTED METHODS OF PRODUCTION. IT IS INTENDED TO IDENTIFY AND DOCUMENT PROBLEM AREAS INVOLVED IN THE TRANSITION, PROVIDE EXAMPLES OF COMPUTER GENERATED ISOMETRIC BLOCK DRAWINGS AND INCLUDE BEFORE AND AFTER PHOTOGRAPHS AND SUPPORTING MATERIAL.

A

0 DEVELOPING SPECIFICATION DRIVEN PIPE DRAWINGS & PIPE DETAILS

THIS PROJECT WOULD DEVELOP THE ARCHITECTURE AND SOFTWARE FOR' A CADCAM SYSTEM THAT WOULD PROVIDE SPECIFICATION DRIVEN PIPING DRAWINGS, PIPE DETAILS AND TAPE IMAGES FOR CONTROL OF NC AND DNC PIPE BENDING MACHINES.

IN ADDITION, THE PANEL HAS A LONG RANGE PLAN THAT INCORPORATES APPROPRIATE PROJECTS IDENTIFIED IN THE NATIONAL SHIPBUILDING RESEARCH PROGRAM (NSRP) FIVE YEAR PLAN AS WELL AS PROJECTS IDENTIFIED BY PANEL MEMBERS AND OTHERS. WHERE SP-4 AND THE NSRP FIVE YEAR PLAN DO NOT AGREE REGARDING ASSIGNMENT OF PROJECTS, SP-4 HAS NEGOTIATED WITH OTHER AFFECTED PANELS UNTIL AGREEMENT ON TRANSFER OF PROJECTS -HAS BEEN REACHED. SP-4 HAS TRANSFERRED TWO PROJECTS TO SP-8 AND ONE TO SP-6 WHILE SP-6 HAS TRANSFERRED TWO PROJECTS TO SP-4 AND SP-8 ONE. THE LONG RANGE PLAN IS A DYNAMIC PLAN CONSTANTLY SEARCHING FOR THE BEST APPLICATION OF THE PANEL'S RESOURCES. IN THIS REGARD THE PLAN IS REVIEWED EVERY YEAR BY THE PANEL AND ADJUSTED TO ACCOMMODATE WORK ACCOMPLISHED AND EVOLVING RESEARCH OPPORTUNITIES.

IN SUMMARY, I'VE TRIED TO OFFER YOU CONVINCING EVIDENCE THAT SP-4 IS EFFECTIVELY WORKING TO MAKE THE SHIPBUILDING INDUSTRY MORE PRODUCTIVE BY THE REALIZATION OF THE CONCEPT THAT DESIGN IS THE FIRST STEP IN THE PRODUCTION SEQUENCE. KEY WORDS USED WERE:

RESPONSIBLE - THE PANEL WAS CONCEIVED BY RESPONSIBLE INDUSTRY REPRESENTATION

- CARE IS TAKEN TO RESPONSIBLY SELECT WORK AND ESTABLISH PROGRAMS.

- THE MODUS OPERANDI IS SUCH AS TO EXPECT RESPONSIBLE RESULTS.

COOPERATION - COOPERATION BETWEEN SP-4 PROJECTS IS REQUIRED.

- COOPERATION WITH OTHER RESEARCH EFFORTS IS SOUGHT.

SYNERGISM - THE AREAS OF CONCERN, THE PREMISE ON WHICH THE PANEL IS FOUNDED AND ITS APPROACH TO ITS TASK HAS LED THE PANEL TO THE ESTABLISHMENT OF AN INTEGRATED PROGRAM OF PROJECTS. WHILE EACH PROJECT IS EVALUATED AND RECOGNIZED ON ITS OWN MERIT, THE SELECTION OF PROJECTS IS SUCH THAT THE TOTAL PROGRAM VALUE SHOULD SIGNIFICANTLY EXCEED THE SIMPLE SUM OF THE INDIVIDUAL PROJECT VALUES.

LAST YEAR I ADDRESSED THE SYMPOSIUM AS A LAST MINUTE SUBSTITUTE FOR THE SP-4 CHAIRMAN, TOM O'DONOHUE. I NOTED THEN THAT TOM WAS ABOUT 6'5" TALL, A WELL PROPORTIONED 250 POUNDS AND COULD EASILY DEMAND YOUR ATTENTION AND THAT ALL I COULD DO WAS ASK YOUR INDULGENCE. THIS YEAR I AM CONVINCED THAT PANEL SP-4 HAS A PROGRAM THAT SHOULD DEMAND YOUR ATTENTION AND THAT ALL OF YOU SHOULD BECOME INVOLVED IN REMOVING THE BAR BETWEEN DESIGN AND PRODUCTION.

THANK YOU.

SP-7: WELDING

B. C. Howser
Manager of Welding Engineering
Newport News Shipbuilding
Newport News, VA

After attending the University of Miami, Coral Gables, Florida, Mr. Howser has been associated with welding at Newport News Shipbuilding for some twenty-two (22) years. During this time he has had management responsibility in the Production Welding Department, Manpower Planning Department for Budget Control and the Welding Engineering Department which he presently manages.

Mr. Howser is his company's sustaining member of the American Welding Society and is a member of the following committees:

- American Bureau of Shipping Special Committee on Welding
- Robotics International of the Society of Manufacturing Engineers
- American Welding Society Committee on Welding in Marine Construction
- Chairman, SNAME/Ship Production Committee SP-7 Welding Panel

ABSTRACT

The SNAME/SPC Welding Panel is committed to the implementation of existing technology as it pertains to shipbuilding welding. Toward these objectives, two projects have recently been completed which are believed to be of considerable interest to the shipbuilding community. Problems involved in the integration of a robot arc welder into shipyard production welding will be discussed as well as a report on the findings of a group of panel members who visited Japan to study their shipbuilding welding methods.

AT OUR INITIAL APPEARANCE TO THIS ANNUAL SYMPOSIUM REPRESENTING THE SP-7 WELDING PANEL, OUR PURPOSE WAS TO ACQUAINT YOU WITH THE PANEL, WITH ITS OBJECTIVES AND OUR APPROACH TO ACHIEVE THOSE OBJECTIVES, AS WELL AS ACQUAINT YOU WITH THE PROJECTS WE HAD CHOSEN TO PERFORM. FOR OUR SECOND APPEARANCE WE ATTEMPTED TO DESCRIBE IN DETAIL THE CONTENT OF OUR PROJECTS AND THEIR STATUS. ACTIVE PROJECTS ARE:

- EVALUATION OF CINCINNATI MILACRON T^3 ROBOT
- EVALUATION OF UNIMATION APPRENTICE ROBOT
- PLASTIC WELD MODELS FOR VISUAL REFERENCE STANDARDS
- FITTING AND FAIRING AIDS
- ACCEPTANCE STANDARDS FOR NDT OF WELDS NOT COVERED BY CLASSIFICATION
- MULTI-CONSUMABLE GUIDE ELECTROSLAG WELDING
- TRACKING SYSTEMS FOR AUTOMATIC WELDING
- BENEFITS OF LOW MOISTURE ELECTRODES
- EXAMINATION OF CANDIDATE STEELS FOR HIGH HEAT INPUT WELDING
- ONE SIDE PULSED GAS METAL ARC WELDING OF ALUMINUM FOR MARINE APPLICATION

THE WELDING PANEL HAS A NUMBER OF PROJECTS PROPOSED FOR FY 1983, FOR WHICH WE ARE AWAITING MARITIME ADMINISTRATION FUNDING. THEY ARE:

- .CORED WIRE FOR SUBMERGED ARC WELDING
- .TRACKING SYSTEM FOR AUTOMATIC WELDING, PHASE II
- .BULK WELDING OF HIGH STRENGTH (80-100 KSI) QUENCHED AND TEMPERED STEELS
- .PROTOTYPE AUTOMATIC PORTABLE TACK WELDER

WE FELT THAT THIS YEAR WE SHOULD USE A SLIGHTLY DIFFERENT APPROACH. THE WELDING PANEL HAS BEEN QUITE BUSY IN THE PAST YEAR; COMPLETING A NUMBER OF PROJECTS OR SO NEARLY COMPLETING THEM THAT THE RESULTS ARE REPORTABLE. FOR OUR PRESENTATION WE HAVE CHOSEN TWO PROJECTS ON WHICH TO REPORT. WE WILL DESCRIBE THESE IN DETAIL; THE APPROACH TAKEN, THE RESULTS ACHIEVED AND CONCLUSIONS REACHED.

ONE OF THE FIELDS THAT WE HAVE BEEN INVESTIGATING IS THE APPLICATION OF ROBOTS IN SHIPBUILDING. IN THE FEW YEARS THAT ROBOTS HAVE COME TO THE FOREFRONT IN OTHER INDUSTRIAL APPLICATIONS, SHIPYARD MANAGEMENTS HAVE BECOME VERY INTERESTED IN THEM. WHEN THEY HEAR THAT A ROBOT CAN WELD FOR 8 HOURS A SHIFT, THREE SHIFTS EACH DAY AND FOR AN INFINITE NUMBER OF DAYS WITHOUT HAVING TO TAKE ANY PERSONAL TIME SUCH AS COFFEE BREAKS AND CIGARETTE BREAKS, DO NOT BECOME TIRED AND SLOW DOWN AND ARE NOT PRONE TO BE ABSENT FROM WORK, THEY QUESTION WHY THERE ARE NO ROBOTS ENGAGED IN SHIPBUILDING WELDING.

IN AN ATTEMPT TO ANSWER THIS QUESTION AS WELL AS TO DETERMINE IF ROBOTS REALLY HAVE APPLICATION TO SHIPBUILDING WELDING AND IF SO, WHAT THAT APPLICATION IS, TODD PACIFIC SHIPYARDS, LOS ANGELES DIVISION AND THE SP-7 PANEL JOINTLY UNDERTOOK THE PROJECT TO EVALUATE A ROBOT WELDING APPLICATION IN A SHIPYARD PRODUCTION ENVIRONMENT.

AN INHOUSE ASSESSMENT WAS MADE AT TODD OF PHYSICAL CHARACTERISTICS OF PARTS REQUIRED BY PAST CONTRACTS. BASED ON THIS STUDY, THE CINCINNATI MILACRON T^3 ROBOT WAS OBTAINED. AN OPERATOR AND MAINTENANCE PERSONNEL WERE, SELECTED AND SENT TO THE FACTORY FOR TRAINING AND IN OCTOBER 1981, THE ROBOT AND ASSOCIATED EQUIPMENT BECAME OPERATIONAL.

THE CMT^3 ROBOT IS A POINT TO POINT SERVO-CONTROLLED MACHINE. THIS MEANS THE ROBOT IS DESIGNED TO FOLLOW A STRAIGHT LINE PATH BETWEEN ANY TWO PROGRAMMED POINTS.

TO PROGRAM A STRAIGHT LINE WELD SEGMENT REQUIRES THAT THE TORCH, WHICH IS MOUNTED ON THE ROBOT ARM, BE PROPERLY LOCATED AT THE STARTING POINT OF THE WELD AND THAT THE ORIENTATION OF THE TORCH RELATIVE TO THE JOINT BE CORRECT. THE CONTROL UNIT IS THEN COMMANDED TO REMEMBER THE ROBOT'S ARM POSITION SO THAT IT CAN RETURN TO THE SAME POSITION WHEN INSTRUCTED. THE ROBOT ARM MUST THEN BE MANEUVERED TO THE END OF THE JOINT, MAKING SURE, THAT PROPER TORCH ORIENTATION IS MAINTAINED; (NOT NECESSARILY THE SAME AS AT THE START OF THE WELD PATH). THIS POINT IS THEN REMEMBERED AS BEFORE. ONCE THE PATH IS

TAUGHT, THE ROBOT, WHEN INSTRUCTED, WILL MOVE TO THE START POINT AND MOVE AT THE ASSIGNED SPEED IN A CONTINUOUS STRAIGHT LINE TO THE ENDING POINT. AFTER EACH PATH IS TAUGHT THE ROBOT IS RUN THROUGH THE PATH AS IF WELDING, ALLOWING THE OPERATOR TO CHECK THE TORCH ORIENTATION BETWEEN THE PROGRAMMED POINTS.

THIS IS AN EXAMPLE OF THE TIME AND EFFORT REQUIRED TO PROGRAM ONE STRAIGHT LINE WELD PATH. WHEN OTHER CONFIGURATIONS HAVE TO BE PROGRAMMED, ADDITIONAL VARIABLE INFORMATION MUST BE INPUT INTO THE SYSTEM TO DIRECT THE ROBOT AND/OR WELDING OPERATIONS. THIS CONTROL INFORMATION MUST BE INPUT AT THE CONTROL CONSOLE AND INCLUDES:

.ROBOT OPERATION INFORMATION

.WELDING OPERATION INFORMATION

.SYSTEM OPERATION INFORMATION

THE MOST TIME CONSUMING ASPECT OF PROGRAMMING A WELDING PATH IS ORIENTING THE TORCH INTO PROPER POSITION RELATIVE TO THE JOINT. PROPER TORCH ORIENTATION IS ABSOLUTELY CRITICAL TO THE OUTCOME OF THE WELD AND TODD REALIZED

EARLY IN THE PROJECT THAT AN EXPERIENCED WELDER WOULD BE NEEDED TO PROGRAM THE ROBOT. THERE WAS JUST NO WAY THAT A PROGRAMMER, NO MATTER HOW GOOD OR EXPERIENCED HE MIGHT BE, COULD SATISFACTORILY ORIENT THE TORCH TO CONSISTENTLY PRODUCE QUALITY WELDS.

PART PROGRAMMING IS THE MOST CRITICAL ASPECT OF THE ROBOT WELDING OPERATION AFFECTING ITS SUCCESSFUL APPLICATION IN SHIPBUILDING. IN VIEW OF THE TEDIOUS AND TIME CONSUMING OPERATIONS INVOLVED IN PART PROGRAMMING AND SINCE SHIPBUILDING IS CHARACTERIZED BY ITS VARIETY OF SMALL BATCH, OFTEN UNIQUE ASSEMBLIES, SERIOUS CONSIDERATION NEEDS TO BE DEVOTED TO THE ECONOMICS OF ROBOT WELDING. IN THE CASE OF A SIMPLE UNIQUE PART, PROGRAMMING TIME CAN REPRESENT AS MUCH AS 90 PERCENT OF THE TOTAL PROCESSING TIME. UNLESS SUFFICIENTLY LARGE BATCH SIZES ARE AVAILABLE TO ALLOW THE ROBOT'S INCREASED PRODUCTIVITY TO OFFSET THIS FACTOR, ROBOT WELDING CANNOT BE ECONOMICALLY JUSTIFIED. ASIDE FROM THE ECONOMICS; HOWEVER, THE ROBOT, WHEN CORRECTLY PROGRAMMED, WILL CONSISTENTLY PRODUCE WELDS OF BETTER QUALITY AND APPEARANCE THAN MANUAL WELDS. THIS IS DUE TO IT BEING ABLE TO MAINTAIN CONSTANT WELD PARAMETERS DURING THE WELD PROCESS. THE ABILITY TO MAINTAIN CONSTANT TRAVEL SPEED ALSO CONTRIBUTES TO BETTER CONTROL OVER DISTORTION.

THE ROBOT PERFORMED SATISFACTORILY, EVEN BETTER THAN THE SPECIFICATIONS CALLED FOR IN SOME CASES. THIS SPECIFIED PERFORMANCE IS TO FAITHFULLY REPEAT THE OPERATION FOR WHICH IT IS PROGRAMMED AN INFINITE NUMBER OF TIMES WITH PREDICTABLE ACCURACY. THIS MEANS THAT THE ASSEMBLIES BEING WELDED MUST BE POSITIONED ACCURATELY AND THE FIT-UP MUST BE MUCH MORE ACCURATE THAN IS GENERALLY COMMON IN SHIP CONSTRUCTION. THESE TWO CONDITIONS PRESENT THE GREATEST BARRIER TO ROBOT WELDING IN SHIPBUILDING, AND WILL REMAIN SO, UNTIL AN ACCEPTABLE MEANS OF GEOMETRY AND DIMENSION VARIATION COMPENSATION IS DEVELOPED FOR REAL TIME CORRECTION.

THERE ARE PRESENTLY UNDER DEVELOPMENT AT LEAST TWO TYPES OF SUCH TRACKING SYSTEMS. ONE OF THESE, A VISION SYSTEM BEING DEVELOPED BY STANFORD RESEARCH INSTITUTE (SRI) IS BEING EVALUATED BY TODD, L.A. IN CONJUNCTION WITH THE ROBOT EVALUATION PROJECT. PRELIMINARY REPORTS INDICATE THAT A SUCCESSFUL MODEL OF THIS SYSTEM IS PERHAPS TWO YEARS AWAY.

ANOTHER TYPE OF GUIDANCE SYSTEM, A MICRO-PROCESSOR CONTROLLED THROUGH AN ARC ADAPTIVE SEAM TRACKER, IS PRESENTLY AVAILABLE AND THE SP-7 PANEL IS FUNDING AN EVALUATION PROJECT TO DETERMINE IF IT IS ADEQUATE FOR FULLY AUTOMATIC AND ROBOTIC SHIPBUILDING WELDING.

THE FUNDED PORTION OF THE CMT[3] PROJECT HAS BEEN COMPLETED BUT THE FINAL REPORT HAS NOT BEEN SUBMITTED. HOWEVER, PRELIMINARY AND INTERIM REPORTS ALLOW US TO DRAW THESE CONCLUSIONS. UTILIZATION OF THE ROBOT TO WELD FAIRLY COMPLEX ALUMINUM AND STEEL SUB-ASSEMBLIES CONFIRMED THAT A PROGRAMMABLE, AUTOMATED MACHINE CAN BE TAUGHT TO MANIPULATE THE TOOL ATTACHED TO IT AND TO CONSISTENTLY, ACCURATELY AND QUICKLY PERFORM THE PROCESS AS DEFINED. MOREOVER, IT WAS ALSO DETERMINED THAT CLOSE TOLERANCE FIT-UP AND POSITIONING ARE NECESSARY WITH EXISTING TECHNOLOGY. TEACHING TIME WAS IDENTIFIED AS THE MOST SIGNIFICANT FACTOR LIMITING THE PRODUCTIVITY OF THE ROBOT IN SMALL BATCH MANUFACTURING OPERATIONS.

THE DETERMINATION OF THE DEGREE OF USEFULNESS OF THE ARC WELDING ROBOT SYSTEM IN THE SHIPBUILDING INDUSTRY IS AN ONGOING TASK WHERE MORE DATA IS REQUIRED FOR MEANINGFUL EVALUATION AND CONCLUSION.

STUDY MISSION TO JAPAN

A SECOND PROJECT INVOLVES A STUDY MISSION TO JAPAN TO OBSERVE SHIPBUILDING WELDING.

THE STUDY MISSION HAD ITS INCEPTION A NUMBER OF YEARS AGO AND WAS ORIGINALLY SUGGESTED IN CONJUNCTION WITH TWO SPECIFIC PROJECTS OF THE WELDING PANEL: (1) "FITTING AND FAIRING DEVICES IN SHIPBUILDING" AND (2) "WELDING ROBOTS IN SHIPBUILDING". MOST OF YOU KNOW THAT VISITS TO JAPAN ARE NOT UNCOMMON. THERE HAVE EVEN BEEN A NUMBER OF GROUPS TO VISIT THAT COUNTRY TO OBSERVE WELDING OPERATIONS, BUT TO THE BEST OF OUR KNOWLEDGE, THIS WAS THE ONLY GROUP TO GO SPECIFICALLY TO OBSERVE SHIPBUILDING WELDING AND OTHER TECHNOLOGY SPECIFICALLY RELATED TO SHIPBUILDING.

WE WERE VERY FORTUNATE TO OBTAIN THE SERVICES OF TWO GENTLEMEN WHO HELPED TO ORGANIZE THE TRIP, ESTABLISH AN ITINERARY, ARRANGE FOR WELDING DEMONSTRATIONS AT THE VARIOUS SHIPYARDS AND TO HANDLE ALL THE LOGISTICS OF OUR TRAVEL. THESE GENTLEMEN WERE MR. MICHAEL SOMECK, MARITIME ATTACHE, U.S. EMBASSY TOKYO, JAPAN AND MR. KOKI TACHIBANA, SPECIAL TECHNICAL REPRESENTATIVE, AMERICAN BUREAU OF SHIPPING, TOKYO, JAPAN. DURING OUR TRAVEL IN JAPAN, ONE OR THE OTHER OF THESE GENTLEMEN ACCOMPANIED US, HANDLING ALL OF THE DETAILS OF TRAVELLING AND ALLOWING US TO DEVOTE OUR WHOLE ATTENTION TO THE TECHNICAL ASPECTS OF THE MISSION.

THE TRIP TOOK PLACE FROM NOVEMBER 29, 1982 TO DECEMBER 19, 1982. DURING THAT TIME WE VISITED 13 COMPANIES ENGAGED IN SHIPBUILDING OR IN THE MANUFACTURE OF SHIPBUILDING COMPONENTS OR WELDING EQUIPMENT. IN THE FEW MINUTES ALLOTTED TO ME FOR THIS PRESENTATION, THERE IS NO POSSIBLE WAY THAT I CAN RELATE TO YOU ALL THE THINGS WE OBSERVED ON THIS TRIP. I WILL ATTEMPT TO HIGHLIGHT SOME OF THE MORE SIGNIFICANT OBSERVATIONS AND RELATE SOME OF THE CONCLUSIONS DRAWN.

FROM THE BEGINNING WE HAD EXPRESSED A DESIRE TO BE ABLE TO GO INTO THE PRODUCTION AREAS OF THE COMPANIES TO BE VISITED AND IN THIS WE WERE NOT DISAPPOINTED. PLANNED DEMONSTRATIONS OF VARIOUS WELDING PROCESSES AND TECHNIQUES WERE PROVIDED IN THE RESEARCH LABORATORIES OF SOME OF THE COMPANIES VISITED, BUT IN MOST CASES WE WERE ALLOWED RIGHT DOWN ON THE SHOP FLOOR TO OBSERVE PRODUCTION OPERATIONS.

THERE ARE OVER 5000 SHIPYARDS IN JAPAN BUT A LARGE PART OF THE SHIPBUILDING TONNAGE IS CONSTRUCTED IN THE SHIPYARDS OF SEVEN MAJOR SHIPBUILDING COMPANIES. OUR ITINERARY INCLUDED EIGHT SHIPBUILDING FACILITIES REPRESENTING ALL OF THESE SEVEN COMPANIES. MANY OF THE SHIPBUILDING FACILITIES, PARTICULARLY THE OLDER YARDS, HAVE OTHER HEAVY CONSTRUCTION ACTIVITIES IN OR ADJACENT TO THEIR SHIPYARDS, SUCH AS PRESSURE VESSELS, BOILERS, DIESEL ENGINES, BRIDGES, ETC. WHICH HELPS TO MAINTAIN A CONSTANT WORKLOAD.

THE PERIOD FROM 1969 THROUGH 1974, DURING THE EARLY YEARS OF THE JAPANESE SHIPBUILDING BOOM, SEVERAL NEW SHIPYARDS WERE BUILT WITH SPECIAL FEATURES TO OPTIMIZE THE CONSTRUCTION OF LARGE VOLUME OIL TANKERS. THESE NEW FACILITIES NOW HAVE A VERY SMALL WORKLOAD FOR THEIR LARGE SPECIALIZED CAPACITY. THE BUILDING DOCKS ARE VERY LARGE; AS MUCH AS 3000 FEET LONG BY 300 FEET WIDE WHICH EQUATES TO A MAXIMUM SHIPBUILDING CAPACITY OF l,000,000 DWT FOR THIS SIZE DOCK.

SINCE MANY OF THE JAPANESE SHIPBUILDING COMPANIES HAD BUILT NEW YARDS OR INSTALLED NEW FACILITIES SPECIFICALLY TO BUILD LARGE VOLUME CARRIERS OF OIL, LIQUIFIED PETROLEUM GAS (LPG) AND LIQUIFIED NATURAL GAS (LNG), THE REDUCED DEMAND FOR THESE PRODUCTS HAS REDUCED THE NEED FOR ADDITIONAL SHIPS OF THESE TYPES. IN ADDITION, THE JAPANESE GOVERNMENT HAS REASONED THAT SINCE THERE IS LESS MARKET FOR SHIPS AND TO EQUALIZE THE COMPETITION FOR MARKET SHARE, HAS REQUIRED THESE COMPANIES TO REDUCE THEIR SHIPBUILDING CAPACITY BY 40 PERCENT.

ONE OF THE THINGS NE WERE PARTICULARLY INTERESTED IN WAS THE USE OF ROBOTS IN SHIPBUILDING. We HAVE HEARD SO MUCH ABOUT FULLY AUTOMATED FACTORIES AND FACTORIES OF THE FUTURE THAT WE EXPECTED TO SEE A SIGNIFICANT NUMBER OF SHIPBUILDING WELDING ROBOTS. THE FACT OF THE MATTER IS THAT WE OBSERVED NO ROBOTS PRODUCTION WELDING IN JAPANESE SHIPYARDS. WE DID OBSERVE TWO WELDING ROBOTS IN TWO OF THE SHIPYARDS VISITED BUT NEITHER WAS OPERATING DURING THE TIME WE WERE THERE.

WE WERE TOLD AT KOBE RESEARCH CENTER THAT A SMALL PORTABLE ROBOT, CAPABLE OF WORKING IN SMALL AREAS OF A SHIP, IS ON THE DRAWING BOARDS AND WILL BE IN JAPANESE SHIPYARDS IN APPROXIMATELY ONE AND ONE HALF YEARS. THERE WERE; HOWEVER, SOME ROBOTS PERFORMING WELDING IN A PRESSURE VESSEL FACILITY AND A LARGE NUMBER WERE WELDING IN A CONSTRUCTION EQUIPMENT MANUFACTURING PLANT. IN THESE FACILITIES, EACH WELDER OPERATED 2 MACHINES, USING EITHER A TEACHING HEAD TO PROGRAM THE WELD PATH OR THE ROBOT ITSELF TRACED THE WELD PATH AND THEN MADE THE WELD.

AT A WELDING EQUIPMENT PLANT, PART OF AN ASSEMBLY LINE FOR DATSUN AUTOMOBILES WAS UNDER TEST, WITH APPROXIMATELY 60 ROBOTS IN USE, PRIMARILY FOR WELDING.

FIT-UP AND FITTING AND FAIRING DEVICES

THE JOINT FIT-UP IN ALL THE JAPANESE YARDS WAS EXCEPTIONAL WHICH INCREASES THE EFFECTIVENESS OF AUTOMATIC EQUIPMENT. FOR EXAMPLE, 40 TO 50 FEET LONG ASSEMBLIES WERE HELD IN PLACE WITH TWO FITTING AIDS (DOGS), WITH VERY CLOSE FIT-UP FOR TACKING AND ONE SIDE SUBMERGED ARC WELDING. ACCURATE CUTTING, FITTING AND FLAME FORMING ALSO CONTRIBUTED TO THE EXCELLENT FIT-UP PLUS THE AS RECEIVED PLATE FROM STEEL MILLS IN JAPAN HAS LITTLE OR NO WAVINESS.

OTHER THAN AUTOMATIC FRAME AND PANEL LINES, MANUAL FITTING AIDS IN USE WERE MUCH THE SAME AS IN MOST U.S. YARDS. THE DIFFERENCE IS THAT AN AID FOR A PARTICULAR TYPE FITTING IS STANDARDIZED AND IS USED IN ALL THE JAPANESE YARDS. NO TACK WELDED FITTING AIDS ARE USED IN SUB-ASSEMBLY FABRICATION UNLESS IT IS ABSOLUTELY NECESSARY. THE PULLING, PUSHING, ALIGNMENT, FAIRING ETC., IS

DONE WITH DEVICES SUCH AS PORTA-POWERS, ELECTRO-MAGNETS, VACUUM HOLD DOWNS, HYDRAULIC JACKS, ETC. THIS PRACTICE PROVIDES SAVINGS IN THE CONSERVATION OF LABOR AND MATERIALS BY ELIMINATING PREPARATION OF THE AIDS, ELIMINATION OF LABOR AND MATERIALS TO ATTACH THEM, REMOVE, THEM AND REPAIR OF THE SITES AFTER REMOVAL.

THE JAPANESE GENERALLY DO NOT USE MECHANICAL MEANS OF FORCING MATERIALS TO BRING THEM INTO FAIR. INSTEAD, THE LINE HEATING TECHNIQUE IS USED WHICH RESULTS IN A MUCH BETTER LOOKING JOB AND ELIMINATES BUILT IN STRESSES. BECAUSE OF THE USE OF THIS TECHNIQUE AND THE PRACTICE OF ACCURACY CONTROL FROM THE VERY START OF FABRICATION, FIT-UP OF UNITS AT THE ERECTION STAGE PRESENTS VERY FEW PROBLEMS.

ONE AREA IN WHICH JAPANESE SHIPBUILDERS CLEARLY EXCEL IS ONE SIDE WELDING. MOST IF NOT ALL OF THE SHIPYARDS HAVE PANEL LINES WHICH USE THE SUBMERGED ARC WELDING (SAW) PROCESS WITH FLUX/SAND/COPPER BACKING (FCB) WHICH TOGETHER FORM A ONE SIDE WELDING SYSTEM THAT PRODUCES EXCELLENT RESULTS. VERY LITTLE BACK SIDE REPAIR IS NEEDED, DUE PRIMARILY TO THE EXCELLENT JOINT FIT-UP AND THE FLATNESS OF THE PLATES.

BESIDES THE PANEL LINES, WHICH ARE ALL FIXED STATIONS REQUIRING THE WORK TO BE ROUTED TO THEM, A LARGE AMOUNT OF ONE SIDE WELDING IS PERFORMED ON CURVED SHELL ASSEMBLY BUTTS AND SEAMS AND SEAMS OF HULL BLOCKS AT THE ERECTION STAGE. THIS IS MADE POSSIBLE BY THE USE OF THE VARIOUS WELDING PROCESSES; SAW, SMAW, FCAW, ETC. IN COMBINATION WITH FIBER/ASBESTOS/BACKING (FAB), A FLEXIBLE BACKING MATERIAL, 24 INCHES LONG BY 2 l/4 INCHES WIDE AND 5/8 INCH THICK. THIS BACKING MATERIAL, DDE TO ITS FLEXIBILITY, SHORT LENGTH AND EASE OF INSTALLATION ALLOWS THE ONE SIDE WELDING PROCESS TO BE UTILIZED TO A MUCH GREATER EXTENT THAN HAS PREVIOUSLY BEEN POSSIBLE. IT ALSO PROVIDES WELDS OF EXCELLENT QUALITY AND APPEARANCE.

THE JAPANESE PLACE MORE RESOURCES INTO APPLICATION ENGINEERING IN THE WELDING TECHNOLOGY AREA THAN IS DONE IN THE UNITED STATES. THEY MAKE FULL USE OF AVAILABLE WELDING TECHNOLOGY, PLANNING ALL WORK IN MINUTE DETAIL BEFOREHAND. ONCE THE WORK IS PLANNED, THEN CAREFUL ATTENTION IS GIVEN TO THE JOB TO INSURE THAT IT TAKES PLACE AS PLANNED. THESE FACTORS, AS WELL AS THE COORDINATED INTERFACE AMONG THE SHIPYARD TRADES, (LAYOUT, CUTTING, FITTING AND WELDING) CONTRIBUTED TO THE EXCELLENT QUALITY OF THE WELDING WE OBSERVED.

IT IS QUITE EVIDENT THAT DEDICATION TO QUALITY IS NOT MERELY A SLOGAN BUT IS A PHILOSOPHY TO LIVE BY IN JAPANESE SHIPYARDS. EACH EMPLOYEE WORKS AS ACCURATELY AS HE CAN TO PERFORM HIS JOB AS NEARLY PERFECT AS IS POSSIBLE. AN ILLUSTRATION OF THIS POINT IS THE WELDER, WHO, AFTER COMPLETING ALL WELDING IN A GIVEN JOB, CLEANS THE WELD, CLEAN SWEEPS THE WORK AREA, REMOVES BLOWERS AND LINES, ETC. AND IN EFFECT PROVIDES FIRST LINE INSPECTION ON THE COMPLETED WELDS. THERE WOULD BE A GREAT LOSS IN RESPECT BY HIS FELLOW WORKERS IF OBVIOUS DEFECTS OR UNWELDED AREAS WERE LEFT BY A WELDER.

QUALITY CIRCLES WERE QUITE EVIDENT, WITH SOME OF THE SHOPS HAVING EXHIBITS OF ACCOMPLISHMENTS ALONG WITH INFORMATION ABOUT THAT PARTICULAR PROGRAM, ITS PURPOSE AND THE PEOPLE WHO HAD BEEN INVOLVED. THESE QUALITY CIRCLES NO DOUBT CONTRIBUTED PARTLY TO THE EXCELLENT QUALITY OF THE WORKMANSHIP OBSERVED IN ALL OF THE SHIPYARDS VISITED. THE EXCELLENT QUALITY CAN ALSO BE ATTRIBUTED TO THE STABILITY OF THE WORK FORCE (LIFETIME EMPLOYMENT) AND THE GREATER AMOUNT OF TRAINING AFFORDED JAPANESE WORKERS.

AS AN EXAMPLE, JAPANESE YARDS TRAIN WELDERS FOR SIX MONTHS AND ALMOST ALL OF THEIR NEW EMPLOYEES HAVE A HIGH SCHOOL EDUCATION. EMPLOYEES ARE GENERALLY HIRED FOR THEIR WORKING LIFETIMES. IN CONTRAST, U.S. SHIPYARDS TRAIN WELDERS ABOUT SEVEN WEEKS. MANY OF THESE TRAINEES HAVE LESS EDUCATIONAL BACKGROUND THAN THEIR JAPANESE COUNTERPARTS AND GENERALLY STAY WITH THE COMPANY ON THE AVERAGE OF 2-5 YEARS.

THE JAPANESE GOVERNMENT IMPOSES STRICT ENVIRONMENTAL REQUIREMENTS ON ALL INDUSTRY, INCLUDING SHIPBUILDING. THE, RESULTS OF THESE REQUIREMENTS ARE QUITE EVIDENT IN THE CLEANLINESS OF THE SHIPYARDS AND THE GOOD HOUSEKEEPING PRACTICED THERE. A GOOD EXAMPLE OF THIS IS THAT ALL WELDING STUBS ARE RETAINED BY THE WELDER AND RETURNED TO A COLLECTION LOCATION EACH DAY. SAFETY AND HEALTH OF THE JAPANESE WORKER IS GIVEN TOP PRIORITY, WITH THE INDIVIDUAL WORKERS BEING OUTFITTED WITH ALMOST EVERY TYPE OF PERSONAL PROTECTIVE EQUIPMENT IMAGINABLE. CONSIDER A SUBMERGED ARC WELDING OPERATOR, PERFORMING THE LEAST HARMFUL OF THE WELDING OPERATIONS; A PROCESS WHICH EMITS VERY LITTLE SMOKE OR FUME, NO MOLTEN SPATTER AND NO VISIBLE ARC LIGHT. YOU WILL STILL SEE THESE OPERATORS IN SPATS, PROTECTIVE LEATHERS, RESPIRATORS, ETC., AS WELL AS THE REGULAR SAFETY EQUIPMENT SUCH AS HARD HATS, SAFETY GLASSES, SAFETY SHOES, EAR PLUGS OR MUFFS, ET CETERA.

TO SUM IT ALL UP, I THINK THIS MISSION PROVED MORE THAN ANYTHING ELSE THAT THE JAPANESE ARE NOT SUPERMEN TO HAVE ACHIEVED THE EMINENCE THEY NOW ENJOY. THEY ARE INSTEAD, DILIGENT WORKERS WHO VERY CAREFULLY PLAN IN ADVANCE WHAT THEY ARE GOING TO DO, PREPARE THEMSELVES TO THE BEST OF THEIR ABILITY TO CARRY OUT THE PLAN AND THEN PAY CAREFUL ATTENTION TO ACCOMPLISHING THE TASK AS PLANNED. IN A FEW WORDS, THEY MAKE BETTER USE OF WHAT IS AVAILABLE THAN MOST OF THOSE WITH WHOM THEY ARE IN COMPETITION.

INTRODUCTION: SHIP PRODUCIBILITY RESEARCH PROGRAM

J. E. DeMartini
Ship Producibility Research Program Manager
Bath Iron Works Corp.
Bath, Maine

Mr. DeMartini is currently responsible for the management of the BIW sponsored Ship Producibility Research Program, which is a major part of the MarAd/Navy funded National Shipbuilding Research Program. This research and development effort focuses its efforts within SNAME Panel SP-6 on Standards and Specifications, and SNAME Panel SP-8 on Industrial Engineering, of the Ship Production Committee. Mr. DeMartini is chairman of both SNAME panels and also serves as National Secretary of ASTM Committee F-25 on Shipbuilding Standards.

Just before his association with the Ship Producibility Research Program, Mr. DeMartini worked as part of the BIW planning team, which was responsible for outfitting plans and schedules for the construction of two 40,000 dwt. tankers. Prior to joining BIW, he was employed as a Staff Manager at the American Society for Testing and Materials (ASTM) and was the staff representative to the ASTM Committee on Shipbuilding Standards.

Mr. DeMartini holds a B.A. in Management from the University of Notre Dame. He is an Associate Member of SNAME and a member of ASTM.

ABSTRACT

Since 1973, Bath Iron Works Corporation has managed the Ship Producibility Research Program (SPRP), an integral part of the Maritime Administration's National Shipbuilding Research Program. In recent years, program efforts have been concentrated in two principal areas: 1) Shipbuilding Standards; and 2) Shipbuilding Industrial Engineering. Significant progress has been experienced in both areas.

The introduction will highlight the recent history, accomplishments, and achievements of the SPRP. Detailed discussions of the activities of SNAME Panel SP-6 on Standards and Specifications and SNAME Panel SP-8 on Industrial Engineering, which comprise the SPRP, will be delivered in the two papers to follow.

INTRODUCTION: SHIP PRODUCIBILITY RESEARCH PROGRAM

This year marks the tenth anniversary of Bath Iron Works Corporation's involvement within the National Shipbuilding Research Program (NSRP) via management of our Ship Producibility Research Program (SPRP). This program is now encompassed by the activities of SNAME Panels SP-6 on Standards and Specifications and SP-8 on Industrial Engineering, of the Ship Production Committee.

A review of the programs undertaken within the Ship Producibility Research Program over the past ten years highlights an impressive record of accomplishments in both the standards and industrial engineering fields. The creation of an active national program for industry standardization and the demonstration of the fact that traditional industrial engineering techniques can be applied successfully within shipyards are but two of the major outgrowths of SPRP efforts. Indications are that the next ten years will provide even greater challenges and more opportunities to improve shipyard productivity through further implementation of standards and industrial engineering techniques within the yards.

Focusing attention on the last twelve months, it is appropriate to characterize this period as one of transition and diversification for the Program.

From an organizational standpoint, Mr. James E. DeMartini assumed responsibility for the SPRP in late October, 1982 from Mr. Joseph R. Fortin. It is appropriate to state for the record a word of thanks to Mr. Fortin for his many contributions to the NSRP, both as a Project Engineer responsible for the Industrial Engineering Program, and subsequently for his direction as Program Manager of the SPRP.

In early December, 1982, Mr. Thomas M. O'Toole joined the program staff as a Project Engineer in the Standards Panel and has been assuming greater responsibilities for the development of programs and activities in the National Shipbuilding Standards Program.

While Joseph Phillips is not new to the Program, the upsurge of activities in the Industrial Engineering Panel related to our successful efforts in evaluating and implementing engineered labor standards within the shipyards have generated many new areas of involvement for Mr. Phillips.

From a technical standpoint, both panels have reached turning points in their respective areas of concentration.

During the last year, the prime focus of the Standards Panel was in support of standards development activities within the ASTM Shipbuilding Standards Committee. Panel members continued to produce draft standards as front-end inputs to the F-25 Committee in order to speed up the ASTM publication process.

An aggressive public relations effort was spearheaded through the Panel which was aimed at bringing the Standards Program to the people. This effort is continuing and up to this point has been tremendously successful.

Finally, a new major area of involvement for the panel is the Navy Document Conversion Program, which involves SNAME, NAVSEA, and ASTM in a cooperative effort to replace MIL-SPECS, Standard Drawings, etc. with commercial industry standards. A feasibility study was conducted within SP-6 on the subject of commercializing the Navy GENSPECS which provides some interesting insights and which is directly applicable to this program.

With the F-25 Program well underway, a requirement now exists for the Standards Panel to expand our activities in directions other than pure standards development. The Standards Panel will be seeking to accomplish this in the coming years; however, it is considered quite likely that some high priority standards development programs in support of F-25 will continue, but on a reduced scale. Mr. O'Toole will discuss the efforts of SP-6 and F-25 in his paper to follow.

A

The prime emphasis of the Industrial Engineering Panel for the last three years has been a multi-phased/multi-shipyard program that has evaluated the feasibility of implementing Engineered Labor Standards, once thought to be applicable only to highly repetitive mass production environments, within the highly variable world of shipbuilding. With a final phase left to come during this coming year, this large scale effort has already demonstrated conclusively that considerable dollar savings can be achieved not only through the use of engineered labor standards for scheduling, but also through methods improvements that become evident through the systematic process of generating the labor standard data.

With the conclusion of this major effort now on the horizon, the turning point for the industrial engineering panel is also focused upon the need to expand and diversify our programs in other areas of Industrial Engineering that will yield substantial benefits to the shipyards. A recent upsurge of interest in the activities of the Industrial Engineering Panel has been noted on the part of NAVSEA and the Naval Shipyards. Future involvement in panel activities by Naval Shipyards may create new opportunities for cooperative efforts between commercial and naval yards in the application of industrial engineering techniques to the repair and overhaul areas.

One new area upon which the Industrial Engineering Panel has already chosen to focus is in the development of a comprehensive Shipyard Industrial Engineering Training Program. Efforts have been initiated to conduct a cooperative effort in the coming year involving Howard Bunch and the Education Panel working in conjunction with the Industrial Engineering Panel. This is a significant step and reflects the philosophy of several of my predecessors that more cooperation between the various panels is necessary in order to derive maximum results from our respective programs. Mr. Phillips will amplify on these and other aspects of the Industrial Engineering Panel's activities in his paper.

In summary, it appears that the time has come for both panels to branch out and seek new opportunities. As will be evident in the two papers to follow, the challenges now before the two panels are quite different, as will be the courses of action chosen to meet these challenges. However, there is one distinct similarity. Both panels, with their standardization and industrial engineering experts, are in a unique position to cooperate with other panels in ways that can produce synergistic results. The need for this type of activity between panels has been emphasized a number of times recently. Last summer the Program Managers of the NSRP recognized that inter-panel cooperation/coordination was essential as the Ship Production Committee activities expanded into areas such as Design/Production Integration and Flexible Automation, which, by their very nature, crossed many existing panel boundaries. Since that time, MarAd has provided the NSRP Calendar and Program Managers now routinely distribute minutes and meetings announcements to their counterparts; steps which make for a more coordinated approach to achieving our common goals.

A review of the tasks listed in the Five Year National Shipbuilding Productivity Improvement Plan highlights the fact that programs assigned to a given panel may have application to other panels as well. Given the scope and depth of some of these programs such a situation is, indeed, not surprising.

Finally, the cooperative effort between the Education Panel and the Industrial Engineering Panel to develop a comprehensive Shipyard Industrial Engineering Training Program is a classic example of where this type of cooperation can contribute to the furtherance of the goals of each panel.

As you examine the following two papers by Mr. O'Toole and Mr. Phillips, you are asked to do so with an eye toward perceiving the broad areas of application for each panel's efforts and to see the many possibilities for increased interaction with other panels. The basic premise upon which the National Shipbuilding Research Program was established and the Ship Production Committee now operates is that increased cooperation within the industry will yield positive gains in productivity and cost reductions in shipbuilding. This has already been proven and there are more opportunities now than ever before to further this cooperative attitude among the SPC panels. We are looking forward to the challenges of the future.

SP-6: ADVANCES IN SHIPBUILDING STANDARDS & SPECIFICATIONS

Thomas M. O'Toole
Project Engineer
Bath Iron Works Corporation
Bath, Maine

Mr. O'Toole is responsible for the administration of the Standards and Specifications portion of the, Ship Producibility Research Program, which is managed by Bath Iron Works Corporation. Specifications Panel SP-6 of the Ship Production Committee, Society of Naval Architects and Marine Engineers.

Formerly a Staff Manager at the American Society for Testing and Materials (ASTM), he was the staff representative for several ASTM technical committees on metals and metals testing.

Mr. O'Toole holds a B.A. in Physical Science from Glassboro State College of New Jersey. He is a member of ASTM.

ABSTRACT

Since 1978, SNAME Panel SP-6 and ASTM Committee F-25 on Shipbuilding Standards have actively been working to develop national industry standards for shipbuilding. Together, they constitute the National Shipbuilding Standards Program.

This paper addresses the recent advances of the National Shipbuilding Standards Program and the continuing use of standards in the shipbuilding industry. The specific projects of SNAME Panel SP-6 will be reviewed with emphasis on new and future standards that will assist in achieving significant cost savings. The developing program to convert Navy Documents that appear to have commercial parallels into commercial standards, and the Navy's continuing adoption of commercial ASTM shipbuilding standards, will also be discussed.

SP-6: ADVANCES IN SHIPBUILDING STANDARDS & SPECIFICATIONS

INTRODUCTION

The benefits of shipbuilding standards are both numerous and evident. A major reason for the use of standards is that products can be manufactured based on uniform design and production processes. Standardization will lead to reductions in design, engineering, approval and inspection times, all of which will ultimately result in reduced shipbuilding costs and construction times.

These benefits of standardization in the shipbuilding industry were the reason for the reactivation of SNAME Panel SP-6 on Standards and Specifications in November, 1977 to serve as the shipbuilding industry steering group for standardization efforts. Shortly after the reactivation of Panel SP-6, ASTM Committee F-25 on Shipbuilding Standards was formed. Panel SP-6 and Committee F-25 work in conjunction with one another to form the National Shipbuilding Standards Program, which will provide the industry with the needed state-of-the-art shipbuilding standards.

The efforts of Panel SP-6 and Committee F-25 are resulting in increased awareness by industry and the Navy of the current programs. The Navy's recent adoption of many of the standards produced under the National Shipbuilding Standards Program is of particular importance in light of the Navy's expanded program to achieve a 600-ship fleet. If more commercial standards can be cited in the construction of U.S. Navy vessels, significant cost savings can be easily attained.

The following pages summarize the efforts of the National Shipbuilding Standards Program, the objectives, accomplishments, and future goals, with emphasis on the following major areas:

- Current activities of the National Shipbuilding Standards Program (both the SNAME Standards Panel and the ASTM Standards Committee)
- Recently completed SP-6 Program Task S-34 on "Commercialization of U.S. Navy GENSPECS"
- Growing success of program as the membership and numbers of standards continue to increase on ASTM Committee F-25 on Shipbuilding
- Current status of the effort to convert Navy Standards to commercial shipbuilding standards

OVERVIEW OF THE NATIONAL SHIPBUILDING STANDARDS PROGRAM

Presently the National Shipbuilding Standards Program consists of SNAME Panel SP-6 on Standards and Specifications and ASTM Committee F-25 on Shipbuilding Standards. SNAME Panel SP-6, through cost shared programs under the National Shipbuilding Research: Program, performs essential support and R&D function of the program, and accomplishes a "pump priming" effort by providing an initial boost to the voluntary efforts of ASTM Committee F-25 in the form of first draft standards.

Committee F-25, the implementing arm of the National Shipbuilding Standards Program, then evaluates each draft standard through the rigorous consensus process of ASTM and eventually publishes a national ASTM shipbuilding standard.

The ultimate success of the National Shipbuilding Standards Program rests with the industry's ability to provide human and monetary resources to support ASTM Committee F-25 and members are continually being sought to join this voluntary effort.

SNAME PANEL SP-6 ON STANDARDS & SPECIFICATIONS

The primary role of the panel is to set shipyard plans and priorities for standards development which will accelerate direct benefits to the industry. Panel SP-6 is managed by Bath Iron Works on behalf of the shipbuilding industry.

Draft Shipbuilding Standards

During the last twelve months, Panel SP-6 has sponsored eleven projects, of which four have been completed and the results input into Committee F-25. Four more projects will be completed by January, 1984. These programs are listed in Table I.

These standards cover a broad spectrum of the shipbuilding industry, from outfitting construction standards to standards that facilitate procurement of major equipment. At the present time, it is anticipated that SP-6 will sponsor at least two standards writing programs during FY-83. These projects, covering Hull Outfit Standards and Standard Equipment Purchase Specifications, will represent over 40 individual standards.

Commercialization of GENSPECS

In addition to providing the industry with draft shipbuilding standards, Panel SP-6 has also produced several reports to assist the shipbuilding industry in its standardization efforts.

One such report is the recently completed Feasibility Study on the Commercialization of the U.S. Navy General Specifications (GENSPECS), which was prepared by J. J. McMullen & Associates. This particular report provides the results of an analysis of the imposed Military and Federal Specifications found in the GENSPECS (1982) and determines the feasibility of converting to commercial standards. This report allows the reader the ability to quickly determine if commercial substitutes are potentially available. This project was prompted by the general belief that the use of commercial standards will result in components that are less expensive, more in line with industry practice, and easier to obtain than components built to military standards.

This report covers a comprehensive review of the U.S. Navy GENSPECS and it recommends direct commercial replacements for many Navy Standards contained in the GENSPECS. The report also recommends over 120 USCG or ABS specification substitutes that could effectively replace the cited Navy Standards and highlights where over 90 "commercial quality" substitutes already exist that could replace the Navy Standards.

Several important conclusions resulting from this task are as follows:

- That all commercial standards recommended as suitable substitutes in the report should receive an extensive technical review for suitability.

- More effort is required to consolidate existing military standards and commercial standards for use as U.S. shipbuilding standards.

- That this report be utilized as a tool in the shipbuilding industry effort to convert Navy Standards into commercial ASTM shipbuilding standards under the auspices of ASTM subcommittee F-25.94 on Navy Documents.

- That NAVSEA conduct analysis of all items identified as suitable commercial candidates for substitution to determine if these standards can be implemented in lieu of the current military specifications.

- That the benefits of this report be communicated to top level management in support of the National Shipbuilding Standards Program.

This report is seen as a key element in the commercialization efforts of the U.S. Navy and to the work of ASTM subcommittee F-25.94 on Navy Documents (which will be covered in the Committee F-25 section of this paper). This document has been transmitted from Panel SP-6 to NAVSEA for review and consideration. The Navy's consideration of this task will be of great significance to U.S. shipbuilders engaged in Naval construction in several ways. The major benefit, however, will be the potential replacement of Military and Federal Specifications with commercial shipbuilding standards that will result in lower costs in the construction of Naval vessels.

Industry Awareness

Another major objective of Panel SP-6 is to engage in efforts that will foster increased awareness of the activities of the National Shipbuilding Standards Program. The program was represented at the First International Maritime Exposition held in conjunction with the 90th annual meeting of SNAME and recently at the 1983 "ASNE Day" Convention. Together, over 400 individuals expressed an interest in the work of SP-6 and F-25, and as a result, the membership of Committee F-25 has grown significantly.

The writer wishes to express his thanks, on behalf of the National Shipbuilding Standards Program, to SNAME and to ASNE for providing the space for the Standards Program Exhibit at these exhibitions.

Continuing efforts to increase public awareness of the program are proceeding. Recent presentations, given by the Chairman of Panel SP-6, Mr. J. E. DeMartini, and the upcoming address at the "Marine Engineering Symposium" by Mr. T. P. Mackey, President of Hyde Products, emphasize the importance of standardization within the shipbuilding industry and of the need for top management support in the voluntary activities of ASTM Committee F-25.

Other public relations activities of the National Shipbuilding Standards Program include publication of several articles appearing in the major maritime journals. These articles contain information relative to several specific tasks of the program and efforts are continuing on a regular basis to inform the maritime industry of this program. With this increased awareness, it is anticipated that future activity within the program will grow at an even greater rate.

An increasing amount of direct participation is seen as being forthcoming from the industry and through cooperative efforts between SNAME panels. This is due to the fact that standardization impacts virtually every aspect of the shipbuilding industry and of most existing SNAME panels in some way.

CURRENT ACTIVITIES - ASTM COMMITTEE F-25 ON SHIPBUILDING

The scope of Committee F-25 is to develop standard specifications, test methods, definitions and practices for design, construction, and repair of marine vessels.

Presently the committee consists of ten technical subcommittees, each relating to a specific area of shipbuilding standardization. These technical subcommittees are listed in Table II.

Membership on the committee is presently 204 and represents a 15% increase from last year. The membership continues to grow as the work and numbers of shipbuilding standards continue to increase.

Standards Development Programs

To date, 13 standards have been through the full ASTM consensus process and have been published. Presently there are seven more standards undergoing the final stages of the consensus process. When these seven standards are approved and published, this will represent an increase of over 50% in the number of standards produced by ASTM Committee F-25 over the past year. This suggests that an even greater number of published standards will soon be forthcoming from the committee. Presently there are nearly 100 active projects in various stages of development, including standards for shipboard furniture to Reinforced Thermosetting Resin (RTP) for Marine Pipe.

Navy Document Conversion Program

Several recent developments with in the maritime industry have led to the formation of a group aimed at managing the conversion of selected Navy Documents to commercial ASTM shipbuilding standards. This group, now designated as ASTM subcommittee F-25.94 on Navy Documents, serves as coordinating group between the Navy, SNAME, and the ASTM technical subcommittees. The major function of this group is to select Navy standards that are believed to have a general amenability to conversion to a commercial standard and submit that information to the SNAME focal point for this activity, Panel SP-6, for action.

The need for commercialization of existing Navy Standards including MIL-SPECS and NAVSEA Standard Drawings was the impetus for major remarks in the SNAME President's Annual Address delivered at the 90th Annual Meeting of SNAME, Nov. 18, 1982. At this address, John J. Nachtsheim formalized the need for the industry to support the U.S. Navy's accelerated shipbuilding program through a concentrated effort aimed at converting Navy Standards to commercial state-of-the-art ASTM standards. Please note that this commercialization of U.S. Navy standards will not be affecting Navy standards which are mission related or in some other sense non-commercial.

Citing the fact that, by the Navy's own admission; approximately 35% of the existing 4,000 MIL-SPECS and 3,500 standard drawings are either out of date or need extensive revisions, he suggested that this situation was a cause for major concern in light of this accelerated construction program. The challenge presented to SNAME was to use the vast pool of technical talent available within the SNAME Technical and Research Organization to conduct a technical review of outdated Navy Standards as a means of bolstering the ASTM Committee F-25 efforts. The SNAME Technical and Research Steering Committee has designated Panel SP-6 as the SNAME focal point of the conversion activity due to requirements for a single activity that would coordinate all SNAME activities for this program.

To date, this Navy Document Conversion subcommittee has developed a formal process which seeks to utilize SNAME members as primary reviewers of the selected Navy Documents. The SNAME reviewers will examine these selected documents with an eye towards "commercialization." Major points, pro and con, concerning efforts to commercialize this standard will be highlighted during this review. Once this Navy Document has been evaluated by the SNAME reviewer, the revised document will be forwarded to various ASTM technical subcommittees for review and ballot where it will receive a thorough industry and Navy review, and eventually receive publication as a national shipbuilding standard.

Once becoming a national shipbuilding standard, adopted, and accepted by the U.S. Navy for use in ship construction, the economic effects of this effort will be fully realized. Although this program is in its early stages, the potential for conversion of large numbers of Navy Documents is great. A brief outline of this conversion process appears in Table III.

As further evidence of the continuing recognition of the importance of the National Shipbuilding Standards Program, the U.S. Navy has recently issued acceptance notices for 12 of the 13 published ASTM shipbuilding standards and steps are being taken internally within NAVSEA to incorporate these standards into the U.S. Navy GENSPECS. Once incorporated in the GENSPECS, these ASTM standards will be cited for applications in the construction of Navy ships. One standard, ASTM F707 on Modular Gage Boards, is being circulated DOD-wide for acceptance at the request of the U.S. Air Force. This acceptance of commercial shipbuilding standards is seen as a key turning point in the efforts of Committee F-25. The continuing publication of commercial ASTM shipbuilding standards and acceptance of these standards by the Navy assures that the National Shipbuilding Standards Program will continue to make strides in cementing industry standards as a part of the shipbuilding routine.

The adoption of commercial standards to effectively replace Navy documents is, in part, a result of OMB Circular A119., which requires that government organizations cite commercial standards wherever possible. On Nov. 2, 1982, the U.S. Navy re-affirmed its top level commitment to the National Shipbuilding Standards Program when Vice Admiral Earl B. Fowler, Commander Naval Sea Systems Command, issued a decision paper which stated the following:

> "NAVSEA (will) continue participation in industry standards writing bodies of particular interest to the Navy. (NAVSEA will) limit participation to those standards where a Navy input will be productive to the Navy, especially where the industry document has a good chance of superceding a Navy specification or drawing, or preventing the need to develop a new Navy document."

The Navy has been a major contributor to the National Shipbuilding Standards Program since its inception. This continued support is essential for the Program to succeed.

In addition to U.S. Navy Support, the U.S. Coast Guard is now working closely with ASTM Committee F-25 in the development of a standard on Marine Sewage Disposal Systems. Once developed, the U.S. Coast Guard will adopt and cite this industry standard in the Coast Guard Regulations. Future activities with government agencies interested in adopting commercial shipbuilding standards are likely to increase as these groups continue to see the advantage of working in cooperation with industry to set standards.

NATIONAL SHIPBUILDING STANDARDS PROGRAM LONG RANGE PLAN

As can be seen the efforts of Panel SP-6 and Committee F-25 are continuing at an increasing rate. As draft standard projects are completed by Panel SP-6, they are continually input into the ASTM Committee F-25 system. In addition to Panel SP-6 inputs, the number of standards originating in Committee F-25 is also increasing. As the number of these standards increases, Panel SP-6 will begin to diversify its present effort from that of the original "pump priming" effort, which has been the prime emphasis of SP-6 activities for the past four years.

It is fully anticipated that many SP-6 programs will still be in direct support of the standards development function of Committee F-25. However, as F-25 reaches a self-sustaining point, the SP-6 Panel must pursue new standards related programs that can lead to increased shipyard productivity. Some examples of this type of activity could be seminars given to shipyard personnel to increase their knowledge of standardization and its benefits, and increased "cross-pollinization" of efforts between other SNAME Panels and Panel SP-6 where the development of selected shipbuilding techniques could lead to standardization. The Panel is currently reviewing the recommendations of the Five-Year National Shipbuilding Productivity Improvement Plan and several of the programs contained therein suggest studies that could lead to cost savings within shipyards.

The recognition of the importance of shipbuilding standards will be more easily seen if potential dollar savings through the usage of the standards within the industry are emphasized. Future standards development in SP-6 and F-25 will attempt to focus on high cost areas where standardization is particularly needed. Future efforts in F-25 include the development of a long range plan for the management of standards development based in part upon the completed SP-6 "Recommended U.S. Shipbuilding Standards Program Long Range Plan." The F-25 Long Range Plan will include mechanisms by which the priorities of standards development by the U.S. shipbuilding industry will be established within the subcommittee framework. As previously mentioned, Panel SP-6 and Committee F-25 are closely reviewing the prioritization of all future programs in an attempt to capitalize on the significant impact of documented cost savings. Other future activities within F-25 include the need for the U.S. Shipbuilding Industry to become involved in the International Standards Organization (ISO) Committee TC-8 on Shipbuilding. The need to become more cognizant of IS0 activities has led to the recent formation of an F-25 subcommittee to review the standards produced by IS0 on shipbuilding and to investigate the possibility for U.S. involvement in future international activities.

The executive committee of F-25 has also recently established a task group to investigate the potential for converting existing foreign national standards (i.e. JIS, DIN, AFNOR, etc.) to commercial U.S. shipbuilding standards in Committee F-25 via a program similar to the Navy Document Conversion Program. The future developments of these two activities could greatly increase the output of standards from Committee F-25.

CONCLUSIONS

The increasing utilization of commercial ASTM shipbuilding standards on both commercial and Navy vessels is a primary goal of the National Shipbuilding Standards Program. This program offers the industry the opportunity to realize significant cost reductions through the use of commercial ASTM standards on both Navy and commercial vessels. Active participation in this program by the entire industry assures that the National Shipbuilding Standards Program can continue to develop into the industry focal point for the production of sound shipbuilding standards.

TABLE I

RECENT DRAFT STANDARDS & REPORTS

SPONSORED UNDER PANEL SP-6

Task S-25 on HVAC Construction Standards:

- Standard Specification for Goosenecks
- Standard Specification for Terminals
- Standard Specification for Fire Dampers
- Standard Specification for Control Dampers
- Standard Specification for Duct Hangers
- Standard Specification for W.T./N.W.T. Closures
- Standard Specification for Penetrations
- Standard Practice for HVAC Drafting
- Standard Practice for Volumetric Testing of HVAC Air Systems
- Duct Details

Task S-27A, Outfit Construction Standards:

- Standard Practice for Machinery Space Supports for Machinery Space Floors, for Marine Use
- Standard Practice for Machinery Space Floors for Marine Use
- Standard Specification for Handrails, Open (Storm and Guard)
- Standard Specification for Staples,Handgrabs, Handle, and Stirrup Rungs
- Standard Specification for Semi-Flush O.T./W.T. Bolted Manhole
- Standard Specification for Semi-Flush O.T./W.T. Hinged, Bolted Manhole
- Standard Specification for Raised O.T./W.T. Bolted Manhole
- Standard Specification for Machinery Space Handrails and Stanchions
- Standard Specification for Flush O.T./W.T. Bolted Manhole

Task S-28, Update of MarAd Schedule for Pipes, Joints, Valves, Fittings, and Symbols:

- Standard Material Schedule for Shipboard Pipes, Joints, Valves & Fittings for Commercial Ships

Task S-30, Mechanical Construction Standards:

- Standard Practice for Design and Application of Valve Label Plates
- Standard Practice for Arrangement of Piping System Thermometer Connections
- Standard Specification for Expanded Sockets for Pipe & Tubing
- Standard Practice for Design of Overboard Discharge Connections
- Standard Practice for Design of Lifting Padeyes
- Standard Specification for Bilge Strainer Boxes
- Standard Practice for the Selection & Application of Valve Operating Gear

Task S-31, QA/QC Acceptance Standards:

- Study produced list of QA/QC acceptance standards in use and made recommendations to produce priority standards.

Task S-32, Purchase Specification Bid Response Sheets for:

- Tubular Heat Exchangers
- Plate Type Heat Exchangers
- Centrifugal and Rotary Pumps for Liquid Service
- Axial Flow Fans
- Centrifugal Fans
- Control Valves
- Remote Valve Operators
- Packaged Refer Units
- Refer Compressors - Reciprocating
- Refer Compressors - Rotary
- Refrigeration Condensers, Receivers, Accumulators
- Refrigeration Oil Traps & Separators
- Refrigeration Expansion Valves, Gages, Thermometers
- Ship Service Generators
- Emergency Generators

Task S-33, Mechanical Construction Standards IV

- Standard Specification for Fire & Foam Cabinets
- Standard Practice for Selection of Thermometers
- Standard Practice for Selection of Gages for Vacuum, Pressure, and Compound Services
- Standard Practice for Shotblast Descaling of Interior Surfaces of Steel Pipe
- Standard Specification for Macomb Strainers
- Standard Specification for Large Plate Flanges, 14" 0.D. and above
- Standard Specification for Tank Sounding Striker Plates
- Standard Practice for Forming Flanged Pipe/Tube Ends for Lap Joint Flanges (Van Stone)

Task S-34, Feasibility Study for the Commercialization of U.S. Navy GENSPECS:

- Study produced final report for the feasibility of U.S. Navy GENSPECS, identifying Navy Standards that could be substituted with existing commercial standards.

Task S-35: Hull Design & Construction Standards:

- Standard Specification for Three Compartment Dispensing Tank
- Standard Specification for 65 Gallon Dispensing Tank
- Standard Specification for Portable Davits
- Standard Specification for Ships Letters and Numerals
- Standard Spedification for Cargo Tank Ladders
- Standard Specification for Cargo Tank Rails
- Standard Specification for Cargo Tank Platforms
- Standard Specification for Pyrotechnic Storage Box

Task S-36, Functional Design Configuration Standards:

- Functional Configuration Standards showing typical equipment packages for:

  - Multi-Stage Distiller
  - Geared Steam Turbine Lube Oil Unit
  - Fuel Oil Service Unit
  - Service Air Unit

Task S-37, Watertight/Gastight and Non-Weathertight Door Standards:

- Standard Specification for Watertight Door
- Standard Specification for Airtight/Gastight Door
- Standard Specification for Non-Weathertight Door
- Standard Specification for Gastight Double Door
- Standard Specification for Dutch Door

TABLE II

COMMITTEE F-25 ON SHIPBUILDING STANDARDS

Technical Sub committees

F-25.01 Materials	F-25.08 Deck Machinery
F-25.02 Coatings	F-25.10 Electrical, Electronics & Automation
F-25.03 Outfitting	F-25.11 Machinery
F-25.04 Hull Structure	F-25.12 Welding
F-25.07 Gen. Support Reqs.	F-25.13 Piping Systems

TABLE III

NAVY DOCUMENT CONVERSION PROCESS

- NAVSEA will submit to Navy Document Conversion Subcommittee any Navy Documents (plus any supporting information) to undergo commercial conversion process.

- Navy Document Conversion Subcommittee will review these Navy Documents for amenability to commercial conversion and submits those documents to the chairman of Panel SP-6

- The Chairman of Panel SP-6 now forwards these Navy Documents to selected SNAME panels where the applicable technical expertise required to review the documents resides.

- These Navy Documents would then be reviewed for amenability to commercial conversion by the selected SNAME reviewer.

- The reviewed Navy Documents and comments received from the SNAME review are forwarded to ASTM to begin the ASTM consensus balloting procedure.

As used herein, the term "Navy Document" means military/federal specifications/standards/handbooks/NAVSEA standard and any type drawings and other similar and related publications intended to be converted to ASTM standards.

SP-8: THE SHIPBUILDING INDUSTRIAL ENGINEERING PROGRAM

Joseph R. Phillips
Project Engineer
Ship Producibility Research Program
Bath Iron Works Corporation
Bath, Maine

Mr. Phillips is a Project Engineer responsible for administration of the Industrial Engineering portion of the Ship Producibility Research Program, which is managed by Bath Iron Works Corporation on behalf of the U.S. shipbuilding industry. He also serves as secretary of the Industrial Engineering Panel SP-8 of the Ship Production Committee, Society of Naval Architects and Marine Engineers.

Mr. Phillips holds degrees from the State University of New York, is a licensed Merchant Marine officer, a member of the Society of Naval Architects and Marine Engineers, and an associate member of the Institute of Industrial Engineers.

ABSTRACT

The successful use of industrial engineering techniques is increasing in the more aggressive U.S. shipyards, both large and small. Activities sponsored by SNAME Panel SP-8 on Industrial Engineering are reaching an expanding audience as repair and overhaul yards, as well as new construction yards, seek to cut costs through the more efficient use of our most expensive resource, manpower.

Recent panel efforts have concentrated in four areas: application studies demonstrating the many uses of engineered labor standard data; informational efforts including a five city workshop series and a primer for small and medium shipyards; increased coordination with the Naval Shipyard/NAVSEA industrial engineering effort; and development of a comprehensive plan for future educational and developmental programs to further advance the use of industrial engineering to reduce the cost of building and maintaining vessels in U.S. shipyards.

SHIPYARD INDUSTRIAL ENGINEERING

Commercial shipyards exist to make money through the building and repairing of ships. Naval shipyards exist today to assist in maintaining the fleet and to provide a base for rapid wartime mobilization.

The industrial engineer views the function of shipyards rather than their unique purpose. 'From this perspective, a construction yard is an integrated system of people, materials, and equipment which manufactures and tests a variety of interim products which are then assembled into a complex final product. A repair and overhaul yard both manufactures and overhauls the interim products as well as performing major Maintenance on final product. The functions performed are very similar whether the final product is a ship, boat, barge or marine structure.

As defined by the Institute of Industrial Engineers, the profession of industrial engineering involves the design, improvement, and installation of these same integrated systems of people, materials and equipment. It draws upon specialized knowledge and skill in the mathematical, physical, and social sciences together with the principles and methods of engineering analysis and design in order to specify, predict, and evaluate the results to be obtained from such systems.

Examples of industrial engineering functions in shipyards are: facilities design; equipment evaluation for purchase justification; labor standard development for manpower scheduling; method engineering for production improvement, etc.

SNAME PANEL SP-8

Panel SP-8 on Industrial Engineering is one of nine technical and research panels of the Ship Production Committee, Society of Naval Architects and Marine Engineers (SNAME). Panel members presently represent naval and commercial shipyards, the U.S. Maritime Administration, Naval Sea Systems Command, and the industrial engineering profession.

The objective of SNAME Panel SP-8 is to assist U.S. shipyards in the development and implementation of an improved industrial engineering capability in order to reduce the time and cost of ship construction and repair.

Panel sponsored projects are funded by the Maritime Administration and Navy on a cost-shared basis with industry. Program management for these funded efforts is provided by the Ship Producibility Research Program Office of Bath Iron Works Corporation.

RECENT ADVANCES

In the past year, four major categories have received attention: application of engineered labor standard data; informational efforts; closer coordination with Naval shipyards; and comprehensive plan development.

Engineered Labor Standards

Four commercial yards have run real-world tests on various applications of engineered labor standard data in the past year. Engineered labor standard data is a series of scientifically generated estimates of the time required to accomplish a given task. The task estimated may be anything from typing a letter to sandblasting a double-bottom tank, and, depending upon the use to which the data will be put, can involve small efforts of short duration or massive jobs requiring a crew of men for many hours. Engineered data is developed from pre-determined time values as opposed to the old stopwatch methods.

This year's work represents the third phase of a four-part effort entitled, "Methods Engineering/Labor Standards Development and Application Program." This program is intended to establish the basic feasibility and cost-effectiveness of such applications. Now in their final stages, the projects explained below represent a cooperative venture using a shared computer system and data base developed in conjunction with the H. B. Maynard Company.

Bath Iron Works Corporation industrial engineers tested applications of computer generated engineered labor standard data for computer simulation of production enhancements. Examples include an evaluation of the existing Welding Incentive System, which may lead to a revision of the criteria upon which bonus rates are based. A second example is a cost reduction study involving two kinds of thermal insulation with differing installation methods. Claims for the superiority of the new type were found to have been exaggerated, thus avoiding a costly and unnecessary changeover.

The industrial engineering staff of National Steel and Shipbuilding Co. has worked extensively in their sheetmetal shop testing applications of labor standard data for detailed shop planning and for providing backup information to support capital expenditure requests. Examples of these tasks include linking engineered labor standards to their Sheet Metal Computer Aided Design System and also providing justification for a method improvement involving purchase and installation of an eight-foot seam welder.

Peterson Builders, Inc. also assigned industrial engineers to SP-8 sponsored work in the techniques of applying engineered labor standards to typical shipyard situations. Working within their sandblast and painting areas, the PBI team was able to draw usable information from previous panel efforts by Newport News and Sun Shipbuilding. In conjunction with the Production Control Department, this team has also prepared standards and control procedures to be implemented in their Pipe and Electrical departments to reduce costs on the ARS Navy Salvage Ship contracts.

At Bethlehem Steel Corporation's Sparrows Point Yard, mobile material handling equipment has received the attention of the industrial engineering team. Development of a system to evaluate the functions and to control the use of forklifts and straddle lifts is expected to increase the efficiency of this use. Fewer individual material moves and an eventual reduction of equipment inventory are expected. Application of standards developed last year for temporary staging has taken the form of labor scheduling and material ordering to ensure the proper number of workers and material of the correct dimensions are on hand for each staging job.

Based upon the lessons learned through two previous phases of development work in seven shipyards, this year's projects, when complete, will greatly enhance industry knowledge and experience in the techniques and benefits related to accurate predictions of the time needed to do a job. Improved production methods, savings from the use of new technologies, and other useful information will also be shared by the panel as a result of these efforts. In round figures, savings potential from the tasks performed to date are estimated by the principal participants at upwards of three million dollars ($3,000,000.00).

Spreading the News

While membership on SNAME panels is open to representatives of all U.S. shipyards and related organizations, we know that only a handful of the more progressive companies are fully engaged in the work of the nine current Ship Production Committee panels. Assessing shipyards alone, we find that in 1982 twenty-one yards were represented on two or more panels. A total of thirty-four yards were at least nominally involved in one or more SPC activities. While this is excellent, it nevertheless means that several hundred U.S. shipyards are still uninvolved, ranging in size from major facilities with over a thousand on the payroll to repair groups employing only a handful. Few of these companies possess the resources to significantly participate in research and development work, but nearly all could benefit in some way from the results of our combined efforts.

Panel SP-8 on Industrial Engineering has this year stepped up efforts to spread the news. Two special projects in particular were designed to serve this purpose, a workshop series, and a Production Planning and Control primer for small and medium size shipyards.

The Scheduling Standards Workshop, developed by Rodney A. Robinson of Corporate-Tech Planning, Inc., was a follow-up to a special project carried out at Peterson Builders, Inc. last year. Similar to previous SP-8 sponsored informational efforts, this workshop was designed to reach beyond our usual participants in a more forceful way than the standard publication and limited distribution of final reports. Like the industry demonstrations of newly developed hardware presented by other panels, this workshop was intended to directly reach potential users of the techniques involved and to give them the opportunity to question and discuss the topic in depth.

In an attempt to reach those yards we seldom hear from, the workshop was initially presented in five locations around the country. In four out of five workshops; Washington, San Diego, Seattle, and New Orleans, a full house guaranteed a lively discussion and a critical analysis of the theories presented and examples used. Naval shipyards were well represented at these workshops, and Norfolk Naval Shipyard later received a special presentation, entirely at their own expense. In all, 165 people representing 39 shipyards and five supporting organizations participated in this informational exchange. Many good suggestions for future panel research topics were received from these participants, along with many requests for publications and additional information.

Another special project is presently nearing completion which will also reach out beyond our normal membership. A Planning and Production Control Primer for Small and Medium Shipyards has been drafted at the request of several smaller yards. Many such organizations have no separate planning department and very few actually control production through scientific planning. This primer is structured for the manager of .a smaller yard to compare the organizational structure of several specimen yards and to see how a planning and production control function would be introduced into them. Organizational options and step-by-step procedure for the evaluation and gradual introduction of planning and industrial engineering techniques will be provided. The first edition of this primer will be widely distributed for review and comment.

The current market situation demands that shipyards use every tool available to become truly competitive. Recently formulated build-abroad/repair-abroad policies will, unfortunately, prevent this industry from benefitting significantly when the world-wide economic recovery takes effect. We cannot simply wait for times to get better; we must make them better. The emphatic conclusion to be drawn from panel experience is that industrial engineering can be used to help improve nearly every element of shipbuilding and repair, for this is its purpose. The original scope of SNAME Panel SP-8, to assist U.S. shipyards in the development and implementation of an improved industrial engineering capability, has therefore become more vital than ever.

To gain maximum benefit from limited resources, SP-8 has initiated several efforts which will help us target future programs where they will do the most good. Examples of how these efforts are evolving into our comprehensive plan can be seen in our recently funded Fiscal Year 1983 program.

THE UPCOMING YEAR

Two primary efforts under Fiscal Year 1983 funding will be consistent with all previous panel efforts. The successful completion of the engineered labor standards investigation in this year is expected to generate additional ideas for future special projects in related areas. Training efforts this year are expected to form a basis for all future industrial engineering educational efforts.

Engineered Labor Standards

Fulfilling the panel's original five-year action plan will be the Phase IV projects within the Methods Engineering/Labor Standards Development and Application Program. Transferability of basic data between shipyards; links to computer design systems, to material handling systems, and to labor incentive programs will be further developed and tested. Reports will be distributed which describe each experimental application, results achieved, and the conclusions of the participants. Wherever it is applicable, step-by-step procedures will be detailed and examples included in these reports. Documented productivity gains and cost savings will be stressed as always.

Most advanced work in engineered standard data application is expected to be performed within member shipyards, entirely at their own expense, in future years. High priority, small scale special products may be funded if a high potential for significant industry benefits is deemed to exist.

Closer Coordination with Navy Yards

Naval shipyards have received the publications of Panel SP-8 from its inception, but until recently only Puget Sound Naval Shipyard has taken an active role in panel activities. Market conditions have brought a change in emphasis which brings the commercial and naval yards closer together. Problems involved in conversion, overhaul and repair are receiving more attention by our member yards. As the panel has begun to put more energy into problems common both to new construction and to overhaul work, we have also begun to seek out more advice and assistance from Naval yards as well as commercial repair yards. Naval shipyards have had a long involvement in industrial engineering and we hope to draw upon their existing talent and experience.

Under the leadership of Capt. Robert A. Sulit, USNR, Director of the Facilities & Equipment Division of the Naval Sea Systems Command, the navy yards have recently formed a group of their own. The NAVSEA Industrial Engineering Steering Group (NIESG) is made up of Production Engineers from the eight naval shipyards, the Naval Ordinance Station at Louisville, KY and headquarters staff. Its intended purpose is to exchange information on common industrial engineering related problems and to generate collective solutions. An SP-8 representative attended the May meeting of NIESG in order to determine possible interaction between the two groups. The nature of current problems, both industrial and organizational, are extremely similar in public and private yards and cooperation should have a net positive effect. The Facilities & Equipment Director's staff will provide the key liaison by attending all meetings of both groups.

Individual naval yards are still encouraged to participate directly in SP-8 activities.

Comprehensive Plan Development

The fourth major thrust of the past year has been a re-assessment of panel goals and procedures. Working within the context of the Five-Year National Shipbuilding Productivity= Improvement Plan (1983-1988) and the panel's own Five Year Action Plan, we are working toward an overall Shipyard Industrial Engineering Comprehensive Plan. This is not intended as a wish list to wave in front of funding agencies, but rather a set of planning documents, updated periodically, which formalize the most successful elements of work done to date. Periodic surveys of industry needs, quantitative assessment of all projects, strong coordination with other groups and follow-up on all efforts are being stressed.

FUTURE DIRECTIONS

Under the Fiscal Year 1984 Industrial Engineering program, a number of future projects are presently being considered for panel support in an effort to broaden the funded portion of our work into Industrial Engineering procedures not yet addressed. Two important aspects of this broader view include doing more for repair and overhaul yards as well as re-involving some of the panel's founding members.

Tasks outlined in the Five-Year National Shipbuilding Productivity Improvement Plan (1983-1988), after some trading with Panel SP-4 on Design/Production Integration, are being prioritized along with a number of panel generated ideas. Some topics are: Organizational Structure to Facilitate Method Improvements; Computer Aided Facility Planning, Design, and Drafting; Accuracy Control Manual for Surface Vessels; and Updated Method Engineering Workshops. These topics and others will be pursued on a funds-available/priority basis.

CONCLUSION: THE NEXT STEP

In closing I would like to re-emphasize an earlier thought. When the National Shipbuilding Research Program was established, the U.S. Maritime Administration was a powerful force operating under a strong national mandate to promote the design, construction, operation, and maintenance of a strong merchant fleet. The Program's original goal was to reduce the cost of construction subsidies by making shipyards more efficient in a number of ways.

A decade later the state of the industry has drastically deteriorated. We are now talking about survival and few outside the ship repair and construction community are listening. With the steady erosion of all traditional industry safeguards we may conclude that the Federal Government is inadvertently backing our foreign competitors. A few commercial yards are presently riding high on a wave of new naval construction, but will they be left high on the rocks when the 600-ship navy is complete and that wave recedes?

If the current domestic economic recovery continues, other U.S. industries will be rehiring laid-off workers. Will we? As workers in these other U.S. industries demand deferred wage increases, will we not also receive similar demands?

As we are pressed harder on every side, we must use every tool available to get lean and mean or we will not survive. There is not a shipyard in this country that can afford to stand still for even a day.

The technical and research panels of the SNAME Ship Production Committee have helped to supply this industry with survival tools, and, if properly funded and supported, they will continue to do so.

Training

Few of the people using industrial engineering techniques in shipyards today are actually graduates of industrial engineering schools. Most first line supervisors, middle managers, and craftsmen promoted to industrial engineering departments learn on the job and teach themselves whatever they can to make their jobs easier. An industrial engineering degree is certainly not required before a person can analyze a suggested method improvement or facility change. The procedures and checklists developed by industrial engineers over the years can, however, add consistency and certainty to these processes.

Two projects are being developed jointly this year by Panels SP-8 and SP-9 on Education under the general heading of Industrial Engineering Training. The first of these involves a double-edged survey to develop a prioritized list of the current needs of shipyard employees for analytical tools, and also a catalog of methods and techniques available to industrial engineers which can best meet these needs. The resulting Shipyard Industrial Engineering Training Curriculum will be used by yard employees to identify the analytical tools which can be used in their particular situation and to locate the book, videotape, correspondence course, or other source which can best describe the procedure. This curriculum is also a part of the panel's comprehensive plan because it will be used to guide the selection of future I.E. training efforts.

Following the priorities established in the Shipyard Industrial Engineering Curriculum, a pilot project will produce a shipyard oriented mini-course on one simple but effective analytical procedure. This course will be tested in a workshop situation, revisions made based on participant feedback, and then packaged as a 30-45 minute videotape. Tape copies will be distributed with pre-printed notes and bibliographies of readily available generic training materials. If the pilot tape can be effectively used in the real-world shipyard environment others will be produced to create a short series.

Last summer the program managers and panel chairmen of the National Shipbuilding Research Program officially recognized that the growing maturity of this program, and of the individual panels, required greater inter-panel coordination. Within less than a year, the benefits of a coordinated meeting calendar, wider distribution of meeting minutes, and cross-fertilization of ideas was already having a positive effect. This effect can be noted in the work of several panels today. The jointly sponsored training tasks of Panel SP-8 and SP-9 are prime examples of this important trend.

THE NEXT STEP is to recognize that several Ship Production Committee panels have a special service role to perform. This role, while inherent in the basic functions of these panels, cannot be filled until its value is formally recognized. This role is to seek out elements within the efforts of all other panels which can be combined together to produce new benefits. Examples include the potential for SP-6 to facilitate the conversion by Panel SP-023-1 of Military Specifications on coatings into nationally accepted commercial standards. Panel SP-9 can promote the educational use by schools and shipyards of training material and publications produced by all of the other panels. The charter of SNAME/SPC Panel SP-10 specifically notes, "The Flexible Automation Panel has the responsibility to act for the industry in coordinating a cooperative technical program with the Maritime Administration and the Navy to: . . . Coordinate the efforts of other SNAME panels proposing flexible automation applications. . ."

The Industrial Engineering Panel has a similar special role to play which has only recently begun to emerge. Industrial engineers can help to organize the various contributions of all panels so that they most effectively work in concert within each individual facility. The definition again: INDUSTRIAL ENGINEERING is the Design, Improvement, and Installation of INTEGRATED SYSTEMS of Manpower, Materials, and Equipment.

While the results of individual panel efforts are highly valuable, the maximum benefit of each one will only be achieved when they are carefully linked together within individual shipyards. To meet the challenge of survival, the U.S. shipbuilding and repair industry must use the integrated systems approach to get lean and mean as quickly as possible and Panel SP-8 on Industrial Engineering is ready to lead the way.

SP-9: EDUCATION & TRAINING

Howard M. Bunch
NAVSEA Professor of Ship Production
Department of Naval Architecture and Marine Engineering
The University of Michigan
Ann Arbor, Michigan

Professor Bunch has been associated with The University of Michigan since 1975. He is responsible for the program for Ship Production within the Department of Naval Architecture and Marine Engineering, and teaches all courses in this area of specialization. He also is classified as a Research Scientist, and is head of the Marine Systems Division, University of Michigan Transportation Research Institute.

Professor Bunch had undergraduate studies in mechanical and civil engineering at Leland Stand ford University. He holds a BA degree and MBA degree from the University of Texas at Austin.

ABSTRACT

The purpose of this panel is to coordinate the development and emplacement of programs for education in the range of technical skills required to improve shipyard productivity. This includes technician training, management refresher training, and pre-entry professional training. The panel was established in May, 1981; contract funding was initiated in the summer of 1982 with a budget of $300,000. Six projects are underway, and in varying states of completion.

The budget for FY1983 is $410,000. The funds are to cover seven high-priority project areas, carried out in eight contract assignments.

SHIP PRODUCTION COMMITTEE
EDUCATION PANEL

HISTORY

* * *

ESTABLISHED IN APRIL, 1981

* * *

PURPOSE IS TO DEVELOP AND MAINTAIN EDUCATIONAL PROGRAMS RELATING TO THE LATEST TECHNOLOGY IN SHIP PRODUCTION AND PLANNING, SPECIFIC AREAS OF CONCERN ARE:

SKILLED TRADED TRAINING
PRE-ENTRY PROFESSIONAL TRAINING
MIDDLE MANAGEMENT TRAINING

EDUCATION AND TRAINING PANEL MEMBERSHIP
(ORGANIZATIONS)

SHIPBUILDERS	10
ACADEMIA	7
GOVT AGENCIES	2
ALL OTHERS	5

SP-9 BUDGET
($000)

	FY82	FY83	
SKILLED TRADES	$ 45	$125	
PRE-ENTRY PROFESSIONAL	90	50	
MANAGEMENT REFRESHER	100	100	
OTHER		3	5
ADMINISTRATION	65	100	
	$300	$410	

EDUCATION AND TRAINING PANEL
FY82 PROJECTS UNDERWAY

CATALOGUE OF AUDIOVISUAL TRAINING PROGRAMS AVAILABLE FOR SHIPYARD TRAINING	$45K
CURRICULUM DEVELOPMENT	$30K
SHIP PRODUCTION TEXTBOOK AND CLASSROOM MODELS	$60K
WORKSHOP: THE DEMING VIDEOTAPES ON QUALITY, PRODUCTIVITY AND COMPETITIVE POSITION	$35K
WORKSHOP: SOCIAL TECHNOLOGIES IN SHIP PRODUCTION	$45K
TECHNIQUES OF SURFACE PREPARATION AND COATING	$20K

EDUCATION AND TRAINING PANEL

FY83 PROJECTS

SKILLED TRADES

SHIPYARD ORIENTATION FOR SKILLED TRADES	$ 40K
SPECIFIC TRAINING PROGRAMS	$ 85K
TRAINING FOR NAVSEA MATERIAL MULTI-YARD APPRENTIC PROGRAM SKILLS TASK ANALYSIS	
	$125K

EDUCATION AND TRAINING PANEL
FY83 PROJECTS

MANAGMENT TRAINING

TRAINING NEEDS SURVEY	$50K
CONTINUING EDUCATION	$50K
	$100K

EDUCATION AND TRAINING PANEL

FY83 PROJECTS

PRE-ENTRY PROFESSIONAL

COMPLETION OF TEXTBOOK AND CASE STUDIES	$50K
	$50K

EDUCATION AND TRAINING PANEL
FY83 PROJECTS

NOT CLASSIFIED

LIAISON WITH INDUSTRIAL ENGINEERING PANEL	$ 5K
MICROFISCHE LIBRARY AND INDEX SERVICES	$30K
	$35K

SP-10: FLEXIBLE AUTOMATION

James B. Acton
Manager, Research and Development
Todd Pacific Shipyard - L.A. Division
San Pedro, CA

Mr. Action joined Todd Pacific Shipyard's Los Angeles Division in his current position as Manager, Research and Development in June 1981. He has over 30 years of increasingly responsible experience in management and staff capacities; the last 21 have been in private industrial corporations. A professional Industrial Engineer, his industrial experience includes 8 years shipbuilding, 9 years aerospace and 3 years in banking, while concurrently advancing to the rank of Captain in the Naval Reserve.

He holds a Bachelor of Science Degree in Business and Economics from Illinois Institute of Technology plus a Standard Certificate in Banking and Finance from the American Institute of Banking; he is a Certified Manufacturing Engineer in the field of Robotics.

Mr. Action is a member of the Navy League of the U.S., the Naval Reserve Association, the American Society of Naval Engineers, the Society of Naval Architects and Marine Engineers, a Senior Member of both the American Institute of Industrial Engineers and Robotics International of the Society of Manufacturing Engineers.

ABSTRACTS

FLEXIBLE AUTOMATION may be defined as the combination of reprogrammable single and multi-functional manipulators and fixed function machines integrated with conventional fabrication and assembly techniques for optimizing the performance of the manufacturing process. Achieving this in the shipbuilding industry came a step closer by the activation of the SP-10 panel at its first meeting on June 14, 1983. With initial projects reviewed and reports on various related projects in progress made by shipyard and Navy members, potential new projects were defined and are being scoped and abstracts prepared by panel members for inclusion in FY '84 plans. Current and future projects and the unique nature of this panel are discussed in the presentation.

SNAME/SPC PANEL SP-10 FLEXIBLE AUTOMATION

I INTRODUCTION

Flexible Automation is a new panel operating in that ill-defined area between proven and emerging technology aimed at productivity improvement, It is not simply the application of robotswhich are defined as:

> "Reprogrammable multi-functional 'manipulators designed to move material parts, tools or specialized devices, through variable programed motions for the performance of a variety of tasks,"

It is more than the now popular Flexible Manufacturing System (FMS). It is not a Computer Integrated Manufacturing (CIM) Center. Thus, for the shipbuilding industry, it is defined as:

> "The combination of reprogrammable single and multi-functional manipulators and fixed functions machines integrated with conventional fabrication and assembly techniques for optimizing the performance of the manufacturing process"

II, BACKGROUND

In mid 1981, it was generally recognized that, in regard to robotics, a void existed in the shipbuilding industry, Perceiving the need to fill this void, MARAD and TODD held a three-day workshop in Long Beach, California October 13-18, Attendance included representatives of 18 shipyards, 7 universities, 4 robot manufacturers, 15 shipyard suppliers, MARAD and various Navy offices, The purpose of the workshop--to bring together a representative mix of industry experts, governmental representatives and educators to develop an understanding of robotics, ascertain the degree of common problems within the industry (associated with Flexible Automation) and to make recommendations for action--were met,

The collective efforts of participants in the workshop through discussion in the general and panel sessions developed a number of significant conclusions:

- While the application of robotics technology' to the shipbuilding industry cannot be a panacea, it can be an excellent tool for improving productivity if the applications are carefully selected and properly utilized,

- In order to apply robotics technology, a program is needed and must be developed by the shipbuilding industry, working with robot manufacturers and educational institutions, and supported by MARAD and the Navy,

- In order to best meet the requirements of all participants in a robotics program, the industry needs to develop a "road map" that will tell how to:

  best transfer the technology now existing;

  develop and apply new technology; and

  target applications to the high cost drivers in the industry,

Review of the sessions, panel discussion and the overall . . conclusions by the participants resulted in the following recomnendations:

- Increase promotion of Flexible Automation and its application to the shipbuilding industry,

- Develop a program in which the shipbuilding industry 'takes the lead and works with robot manufacturers and educational institutions to apply the technology to the industry,

- Establish a shipbuilding Flexible Automation Panel under the SPC to take action on these recommendations and continue to act for the industry in coordinating a cooperative technical program with the Maritime Administration and the Navy,

III. PANEL ESTABLISHMENT

The Flexible Automation Panel, sponsored by Todd Pacific Los Angeles Division, was established by the SPC in mid 1982 to commence functioning with the FY 83 budget, The first meeting was held July 14 & 15 1983, Five commercial shipyards, two Naval shipyards, one 'educational institution, three consulting firms, two equipment manufacturers, Robotics International of SME, the Maritime Administration and the Navy were represented, Several other commercial shipyards have indicated their intention to participate,

The panel reviewed the results of the workshop and adopted a charter which will implement the conclusions and recommendations thereof,

The panel has agreed and requested that the following significant points be emphasized to the other panels:

- There wi11 be a considerable overlap between SP-10 and other panels such as SP-7, therefore requiring close coordination between panels rather than duplication of their efforts, Thus, the substantive requirements of each flexible automation project must be analyzed in order to determine the lead panel,

- This panel should be prepared more than any other to provide service to other panels,

- Progress of projects should be carefully monitored by the entire panel with those failing to show accomplishment cancelled and the remaining budget applied elsewhere,

IV, CURRENT PROJECTS

Robotic Welding Cable Manufacture, Inspection and Repair, Bethlehem Steel, Sparrows Point

Scope

This project will be directed to the development and installation of a robotic controlled system for the manufacture and repair of welding cable, Eethlehem Steel's Sparrows point Shipyard will enlist the technical assistance of Virginia Tech, for this project,

Objective

The proposed system will perform the following functions:

1. Take new cable from a reel,' cut it to the desired length, and attach the male and female cam locks to the ends,

2. Take used welding lines and inspect them for damage; and from predefined parameters, identify what kinds of repairs are necessary,

3. Perform the following repairs as required:
   - replace the male and/or female cam locks
   - cut out damaged areas and splice the remaining pieces together
   - tape over minor damages to the insulation perform no repairs on undamaged lines
   - perform no repairs on lines having too many damaged areas, but feed them into a discard bin.

PROJECT TASKS

The major research and development tasks of the total project are as follows:

1. Perform detailed study of present welding cable production/repair operations,

2. Identify and develop functional specifications for the automated system components,

3. Perform detailed economic analysis,

4. Interact with vendors and make plant visitations,

5. Develop a physical model to simular the automated welding cable production/repair system,

6. Solicit vendor proposals, compile and evaluate proposals. Order automated machinery components,

7, Perform layout, design, and overall site preparation,

8. Install and test automated welding cable production/repair system,

9, Evaluate the automated system and make any necessary modifications,

10. Develop procedures manual,

Phase I of the project covers Tasks l-6, except for ordering equipment.

Cost

Phase I has been funded for $318,231,

Potential Savings .

The savings from this project will result from the shipyard's increased capability to adequately supply its work force with quality welding lines, This will significantly reduce the amount of lost time incurred while welders or tackers are either searching for usable lines, exchanging damaged lines for good lines, or repairing lines, B.It is expected also that the costs associated with the repair of copper inclusions in the steel will be greatly reduced, as there will be fewer such inclusions, c,Additionally, there will be a savings resulting from a decrease in the manpower currently utilized to repair welding lines,

Keeping in mind that any savings must be reduced by installation and maintenance costs, it is conservatively estimated that Sparrows Point Shipyard can realize annual savings of $600,000, It is not difficult to see that larger shipyards can realize proportionately greater savings,

PLAN FOR IMPLEMENTING FLEXIBLE AUTOMATION IN THE SHIPBUILDING INDUSTRY - TODD LOS ANGELES DIVISION

Scope

This project will utilize a consulting firm to augment and assist the panel in:

1. Developing a "road map" for transferring existing and developing/applying new flexible automation technology to the industry; and

2. Establishing a consensus priority list of high cost driver areas for target applications of this technology,

Objective

The proposed project Will determine what has to be done in order to decide which jobs or processes should be automated, what automatic and auxiliary equipment should be selected, and how to prepare the work place and workers for 'introduction of automation, This will provide the basis for determining the detailed analyses/projects that should be pursued for each proposed application,

Task Area Outline

Collect and analyze data on:

1. Basic economic factors such as numbers of shifts Per day, number of work places, number of parts, batch size, cycle time, etc.;

2. Dimension, weight, characteristics of parts to be handled;

3. Type of operation to be performed;

4. Fixturing and tooling needed;

5. Auxiliary facilities required;

6. What kind of inspection tools are needed; and

7. Working conditions currently put on the workers,

Schedule

This project should be completed by mid 1984,

Cost

Competitive quotations will be solicited; cost will not exceed $100,000,

Benefits

The task of introducing automation is neither simple nor straightforward, The opportunities for mistakes are enormous; and each is likely to be costly, By developing a plan for implementation, the costliest--those that are Iikely to occur because of lack of knowledge--can be minimized,

V. FUTURE PROJECTS

ROBOTIC THERMAL SPRAY FACILITY (SPRAYING ALUMINUM ONTO STEEL FOR CORROSION PROTECTION)

1. This project will require major involvement of panels SP-7 and 023-l with SP-10 leading, Potential support "spin-off" projects include changed weld procedures to take advantage of the aluminum as' a "weld through" coating, This would permit coating plates and shapes prior to fabrication, .

2. The facility. size should accommodate parts up to 12' x 40" (plate) and shapes (angles, tees) of equal length,

3. METCO (vendor) is interested in helping develop the specifications and the project.

MARKING OF PLATE CUT BY CNC BURN1NG MACHINES

1. Explore various marking devices such as laser, and the Ishikawajima-Harima Heavy Industries (IHI) Co,, Ltd. "Z-marking" system,

2. All identification data should be included,

3. Should be generated along with the cutting information (CAD-DNC, tape, etc,),

PROCEDURE AND EVALUATE AN EXISTING 3-D VISION SYSTEM

1. The potential availability of Robotic Visiion Systems, Inc, "two-pass" system developed for the "Flexible Manufacturing System for Submarine Propellers", and other systems demonstrated at Robot VII needed to be explored,

2. The panel agreed on the need for reaching the objective of off-line teaching but wants more information on currently available systems,

VI, CONCLUSIONS .

The challenge facing the Flexible Automation Panel involves developing uses of Flexible Automation as tools to interface with various processes thus providing, the hardware to support Group Technology, This is perceived to be the incorporation

of various combinations of programmable/non-programmable single and multiple use automated machines supplementing or replacing existing equipment and integrated into the various shipyards to provide improved product quality and precision, plus increased output capability and flexibility,

***

SP-O-23-1: SURFACE PREPARATION AND COATINGS

John W. Peart
Chief Chemist
Avondale Shipyards, Inc.
New Orleans, LA

Mr. Peart acquired 17 years experience in corrosion and process engineering in the aerospace industry. He has worked the last 13 years in the Marine Industry in the area of surface preparation and coating method and corrosion engineering and has served as R & D Manager of SNAME 023-l for seven years.

Mr. Peart graduated from South East Missouri University with a B.S. Chemistry and did graduate work at the University of Akron in polymerchemistry.

ABSTRACT

This paper gives a brief review of the National Shipbuilding Research Program's effort in the area of surface preparation and coatings.

Its efforts to determine the necessary radius required on sharp edges to provide coating life equivalent to flat areas is disucssed.

The survey of abrasive sources and the quality of the abrasive materials available and the necessary requirements is reviewed.

The progress report on the development of a means to deposit calcite coatings in ship ballast tanks as a method in controlling corrosion is presented.

SNAMF, SHIP PRODUCTION COMMITTEE
023-1 SURFACE PREPARATION AND COATING

When I was reviewing this years panel activities in preparation for this presentation, it occurred to me that the best news of all is that even though it has been a trying year for U.S. shipyards, the 023-l panel is Alive and Enthusiastically Active. This is evidenced by excellent meeting attendance and continued dedication of effort.

Unfortunately, in my inter-shipyard visits and program coordination efforts, I have noted a subtle but distinct change of attitude of some management. Within some yards one feels a ground swell of parochialism.

This is no doubt the result of fear. Indeed U.S. shipbuilders have very valid concerns with the limited market resulting from the demise of commerical shipbuilding and the seemingly slow initiation of Navy procurement of non-nuclear vessels.

But if these concerns are allowed to become fear and replace logic, a regression to Pre-1970 attitudes will occur. If this happens, continued productivity improvement in U.S. shipbuilding will be severly jeopardized.

The accelerated acceptance and implementation of technology and the productivity gains experienced by the U.S. shipbuilding in the last decade has been primarily the result of cooperation. Identifying common problems, working to gather in their solutions and sharing the results. This not "closed doors" has been the blueprint of success of the National Shipbuilding Research Program. The continuation of this cooperative attitude is essential to its continuing success.

I previously spoke of our good committee attendance, for example, last fall fifty people attended the annual minisymposium and joint meeting with SNAME 023 and ASTM F 25.02 Marine Coatings. Even greater participation is expected at this fall minisymposium. The meeting will be co-sponsored by the NavSea 05Ml Material and Corrosion Control Group. Navy speakers will discuss the fleet corrosion control program and its impact on the shipbuilders in addition to speakers discussing our National Shipbuilding Research Programs. The minisymposium will be held Wednesday, October 5, at the Downtown Holiday Inn in Baltimore. The committees will meet Thursday, the 6th and as an additional attraction on Friday, the 7th an on site demonstration will be given at Bethlehem Steel Sparrows Point on their new mineral grit reclamation facility, a 023-l R & D program. I will show some slides and further discuss this program later.

I believe one of the most significant developments in our program in the past year has been the increased Navy participation. Through the efforts of the Navy representative on our committee, approval has been received to apply flame retardant water base coatings to the crew areas of one of the fregits being built at Todd - Los Angeles. We are funding a program to trace and compare the application costs of this system and the conventional solvent systems specified. Meanful cost savings are anticipated because of less interference with welding and burning, the elimination of costly solvents and the superior application characteristics of the water base material.

Additionally, meanful weight savings will be achieved. Weight being a very critical design criteria for modern combatants.

We are also cost sharing the Phase II life cycle cost study of the different generic coatings in different ship areas with the Navy. We are funding David Taylor Research Labs at Annapolis to develop data base system to which our present data will be programmed and additional coating

inspection data will be added as received. A standard inspection data acquisition system will be developed for both Navy and Commerical paint systems. The Navy will initiate a program for the collection of coating performance data at their facilities which will be entered into the program. The broadened data base will increase confidence level of the coating performance and life cycle cost analysis.

Japanese Coating Technology definition and implementation efforts are continuing. A preliminary draft of the "Design and Planning for Zone Oriented Painting System" has been delivered. Finalization of this report as well as the coordination of the "Adaptation of Japanese Pre-Fabrication Priming Procedures to U.S. Shipbuilding Methodology, Feasibility Study" will be accomplished with a visit to IHI this fall.

The object of the latter program is to compare coating life resulting from the Japanese and U.S. shipbuilding surface preparation methods.

The life cycle test program will be initiated soon and ship inspections will be accomplished during the visit. The "Effect of Edge Preparation and Coating Life" Phase I has been published and distributed. It primarily reports the results of a world wide literature search of the subject. Shipbuilding standards from different countries are included addressing the preparation of steel surfaces and imperfections prior to coating.

Studies have been done on the effect of edge preparation on coating life in the Soviet Union, Sweden and Italy. The Russian paper being the most interesting.

The Russians concluded the following:

1. For angles less than or equal to 90° effective edge preparation cannot be obtained.

2. As the bevel angle increases above 90°, edge protection increases with increasing film thickness for a given paint system.

3. With the bevel angle less than 150° (5 mm (0.2 in) radi) and film thickness in the range of loo-150 micron (4 - 6 mils) edge protection relative to flats is still not possible.

4. Below a bevel angle of 135° surface preparation has no effect on coating life. Figure 2 illustrates bevel angles and radius of curvatures that result in significant changes in coating life.

5. Figure 1 is a parametric graph of coating performance vs. bevel angle.

This plot shows two significant performance life rate changes, one between 90° and 135° and one between l35° and 150° for a given surface preparation and coating thickness.

ABRASIVE RECLAMATION FACILITY

The abrasive prototype reclamation facility went on stream at Bethlehem Steel - Sparrows Point shipyard August 1st and quality products are being produced. The project was completed in eight months after the contract was awarded. This was the result of an excellent job by, Sparrows Point Facility's group and the fact that little modification was required on the equipment as delivered by Apache Abrasives, Houston, Texas.

ABRASIVE SURVEY AND SPECIFICATION

The work on this project is nearing completion and report will be published soon.

The object of this project was compare characteristics of available abrasives and develop a specification from the test data.

Ten materials were tested including coal slags, copper slags and speciality materials. The specific gravity was determined on the materials because a higher specific gravity material releases more kinetic energy on impact. Three materials, two copper slags and Dupont's "Starblast" had

the highest specific gravity (3.57) of the materials tested. As expected, the copper slags had the highest cutting rates but the DuPont material did not follow this pattern, having the worst cutting rate of any material tested, no doubt because of its small rounded, particles. Conversly it had the best breakdown characteristics and the coal 'slag materials the worst. This characteristic is primarily important in determining the feasibility of reclaiming but it also will predict the amount of dust generated on blasting.

Chemical analyses were performed' for chloride and sulfate soluble salts additionally resistivity measurements were made. Soluble salts deposited on a blasted surface results in premature oxidation and/or detramental to the coating. Resistivity measurements indicates the amount of dissolved salts present, the lower the conductivity measurement the higher the ion content, and the higher the soluble salts.

Three' materials had a low ranged of conductivity. One a copper slag having a medium amount of chloride and a 50-50 coal slag/copper slag mixture having a very low conductivity and a very high chloride content. 'But oddly, the other material having a low conductivity was a copper slag having (0) chloride and a low sulfate.

One must conclude that this material is contaminated with some yet to be identified soluble salt.

CATHODIC PROTECTION/PARTIAL COATING VERSUS COMPLETE COATING IN TANKS

Since the results of one year ballast cycling has been reported, cycling has continued on the test tanks. The results of twenty-one months testing is summarized below:

1. In general the tank containing shop primer and zinc anodes is performing very well and remains protected as indicated by the calcareous deposits,

6.

2. The tank partially coated (top and bottom) and protected with Zinc anodes is performing second best and is still being protected.

3. Additional coating breakdown has occurred in the fully coated tank and active corrosion is occuring in localized areas. This is evidenced by potential measurements as well as visually.

4. The tanks protected with aluminum anodes (Galvalum III) has performed very poorly.

5. The tank protected with one mil of shop primer only is in a highly active state of corrosion because of the depletion of the zinc in the primer.

This presentation provides a high light of our activities time constraints limits the number of projects discussed. The summary of program to date including available reports is available on request.

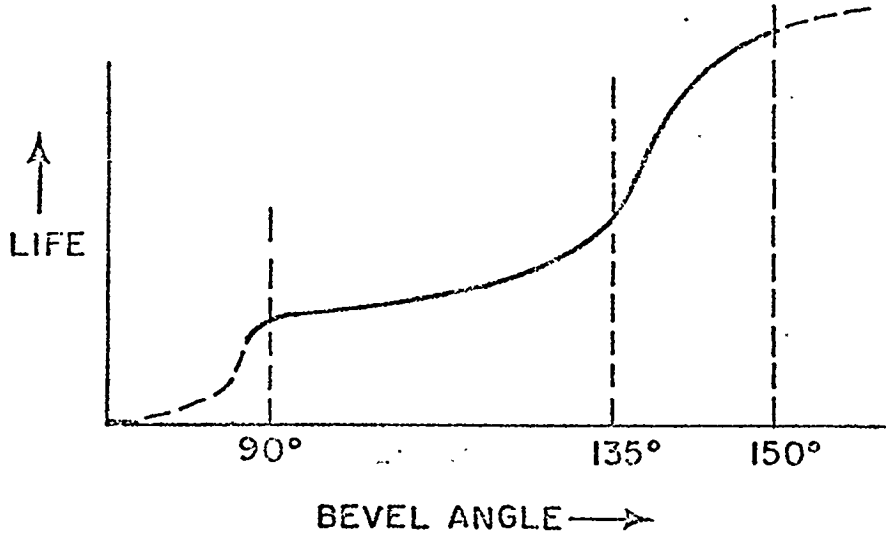

Fig. 1. A parametric graph of coating performance against: bevel angle.

Actual bevel angles (α):

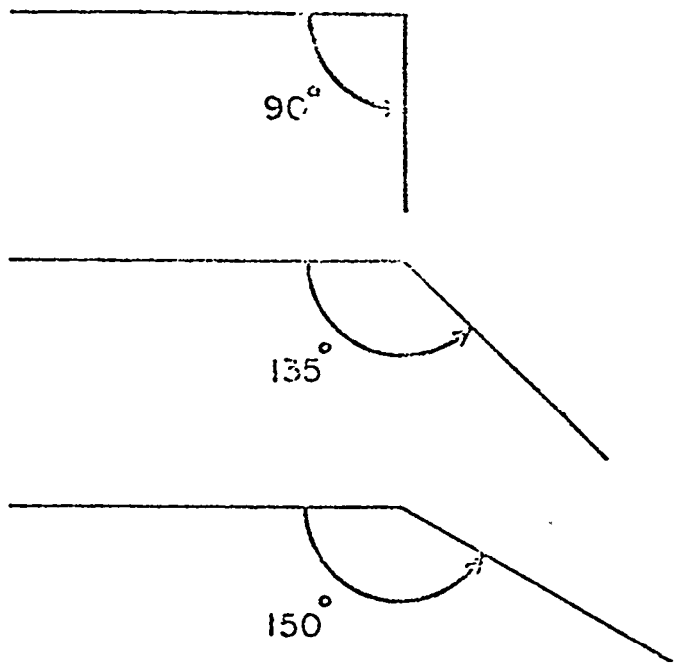

Actual radii of curvature (r):

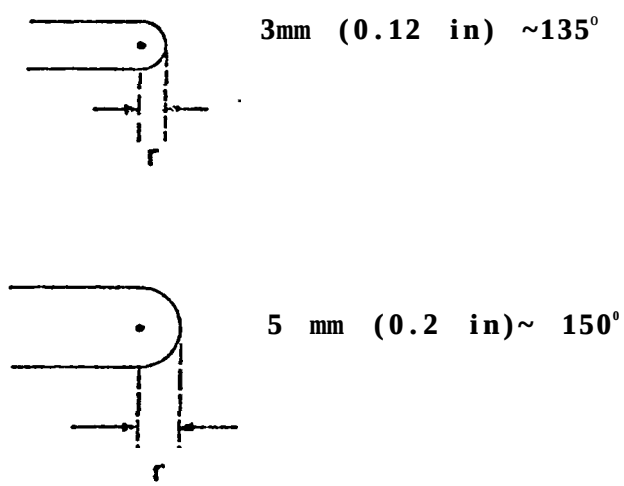

Fig. 2. Illustration of actual bevel angles and radii of curvature corresponding significant changes in coating performance on edges

APPENDIX A: SPC/IREAPS TECHNICAL SYMPOSUM AGENDA

TUESDAY, AUGUST 23

7:30 REGISTRATION AMERICA LEVEL-FOYER
4:00

9:00 KEYNOTE ADDRESS AMERICA BALLROOM

. THE HUMAN SIDE OF TECHNOLOGY
Admiral Hyman G. Rickover, USN (Ret)

10:00 INFORMAL DISCUSSION PERIOD

10:30 GENERAL SESSION AMERICA BALLROOM
SESSION CHAIRMAN: B. Long
Bethlehem Steal Corporation

- PRODUCTIVITY REDISCOVERED
  J. W. Brasher, Ingalls Shipbuilding
- COST CONCEPTS & PRODUCTIVITY
  I.D. Gessow, U.S. Maritime Administration
- ENHANCING PRODUCTION MANAGEMENT CONTROL
  T. O'Connor, J. Lucie, S. Fisher
  Advanced Technology, Inc.

12:00 LUNCH

I:30 CONCURRENT SESSIONS
Session 1 AMERICA NORTH
PLANNING
SESSION CHAIRMAN: 0. Gatlin
Avondale Shipyards

- BUILD STRATEGY DEVELOPMENT
  J.D. Craggs, Appledore, Ltd.
- A CONCEPTUAL (DATA BASE DESIGN) INFORMATION MODEL FOR OUTFIT PLANNING
  R.L. Diesslin, IIT Research Institute
- RATIONALIZATION OF SHIPYARD INFORMATION FLOWS FOR IMPROVED SHIPBUILDING PRODUCTIVITY
  M.E. Steller, Temple, Barker &Sloane, Inc.

Session 2 AMERICA CENTER
SESSION CHAIRMAN: J. Peart
Avondale Shipyards

- COST REDUCTION IN DECK MACHINERY INSTALLATION
  D.G. Pettit, Naval Sea Systems Command
- MODIFICATIONS TO THE SHIP HULL CHARACTERISTICS PROGRAM FOR CALCULATING METACENTRIC HEIGHT
  R. McNaull, Maritime Administration
- PRODUCTION RISK MANAGEMENT
  J. Lucre, Naval Sea Systems Command
  D. L. McMichael, McMichael & Associates

3:00 INFORMAL DISCUSSION PERIOD

3:30 CONCURRENT SESSIONS
Session 1 AMERICA NORTH
SESSION CHAIRMAN: R.A. Price
Avondale Shipyards

- STATE-OF-THE-ART CAD/CAM APPLICATIONS IN THE SHIPBUILDING INDUSTRY
  R.L. Diesslin, IIT Research Institute
- INCREASE OF PRODUCTIVITY BY AUTOMATED PREFABRICATION OF PIPE SPOOLS
  G. Wilkens, Oxytechnik Ges. MbH
- CAD/CAM IN A NAVAL REPAIR YARD-UPDATE
  J. Renard and F. Nigro
  Long Beach Naval Shipyard

Session 2 AMERICA CENTER
HUMAN RESOURCES
SESSION CHAIRMAN: H.M. Bunch
University of Michigan

- BEHAVIOR MODIFICATION OR WORKER PARTICIPATION? PRODUCTIVITY AND THE SHIPBUILDING WORKFORCE
  M.E. Gaffnay, National Academy of Sciences
- HUMAN FACTORS AND MODELS
  J.W. Rohrer, D.M. Hall, J.A. Breslin
  U.S.A. Models
- SURVEY & ASSESSMENT OF SHIPYARD TRAINING FOR PROFESSIONAL SHIPYARD EMPLOYEES
  P.W. Vickers, University of Michigan

5:00 ADJOURNMENT

5:30 RECEPTION AMERICA SOUTH
6:30

WEDNESDAY, AUGUST 24

7:30 REGISTRATION AMERICA LEVEL-FOYER
4:00

8:30 CONCURRENT SESSIONS
Session 1 AMERICA NORTH
CAD/CAM
SESSION CHAIRMAN: G. Plsncich
J.J. Henry

. CAD & PRODUCTION SYSTEMS USING COMPUTER GRAPHICS
D.R. Patterson, British Ship Research Assoc.

- APPLICATIONS OF CAE TO SHIP SYSTEMS AND STRUCTURES
  J.M. Reed, L.F. Cooper, T.C. Esselman
  Westinghouse Electric Corp.
- "SPADES" INTEGRATED APPROACH TO STRUCTURAL DRAWINGS & LOFTING
  F. Cali and F. Charrier, Jr.
  Cali & Associates, Inc.

session 2 AMERICA CENTER
SESSION CHAIRMAN: J. Erikson
Bath Iron Works

I THE ENGINEERED TIME VALUES SYSTEM-A BETTER APPROACH TO PRODUCTIVITY MANAGEMENT IN MAINTENANCE
R.A. Bihr. PRC Systems Services

I MATERIAL REQUIREMENTS PLANNING-A NEW AUTOMATIC SYSTEM AT LONG BEACH NAVAL SHIPYARD
D.W. Cunningham, Arthur Andersen & Co.

I A FLOOR SPACE SIMULATOR FOR SHIPYARD STEEL
S.M. Knapp, SPAR Associates, Inc.

I0:00 INFORMAL DISCUSSION PERIOD

I0:30 CONCURRENT SESSIONS
Session 1 AMERICA NORTH
CAD/CAM
SESSION CHAIRMAN: J. Wasserboehr
National Steel and Shipbuilding

I COMPUTER APPLICATIONS IN A BUILDING AND REPAIR YARD
R. Lovdahl & P. Cromer
Todd Pacific Shipyards Corp.

I PRODUCT MODELLING IN INTERACTIVE AUTOKON
J. Oian, Shipping Research Services, Inc.

BI-DIRECTIONAL INTERACTIVE GRAPHIC INTERFACE FOR STRUCTURAL SYNTHESIS DESIGN PROGRAM AND HULL STRUCTURAL DATA BASE PROGRAM
E. Byler and R. Frasca, Advanced Marine Enterprises, Inc.
P. Glennie, Naval Sea Systems Command

Session 2 AMERICA CENTER
SMALL YARDS
SESSION CHAIRMAN: E.R. Bangs
IIT Research Institute

- KEEPING UNIT OUTPUT LOW WHILE INCREASING PRODUCTIVITY
W.Z. Hayman, Missouri Valley Shipyard
- "DOES THE FUTURE OF U.S. SHIPBUILDING LIE INLAND?"
J.M. Ross & J. Boylston, Giannoti & Assoc., Inc.
- GETTING THE JOB DONE AT THE SMALLER SHIPYARD
C. Baumgardner, Design Models, Inc.

12:00 LUNCH

1:30 GENERAL SESSION AMERICA BALLROOM
SESSION CHAIRMAN: J.W. Hartigsn
Naval Sea Systems Command

I IMPLEMENTATION AND IMPACT OF WORK STATIONIZATION IN SHIP CONSTRUCTION OUTFITTING
M.R. Yriondo, Designers & Planners, Inc.

I NARROWING THE GAP BETWEEN HUMAN WORK PERFORMANCE & POTENTIAL
D.C. Anderson, University of Notre Dame

3:00 INFORMAL DISCUSSION PERIOD

3:00 GENERAL SESSION AMERICA BALLROOM
SESSION CHAIRMAN: J. J. Nachtsheim
Advanced Marine Enterprises, Inc.

I IMPACT OF TECHNOLOGICAL CHANGE ON SHIPBUILDING PRODUCTIVITY
E. Frankel, Massachusetts Institute of Technology

I CAN WE EXPECT THE SHIPBUILDER/DESIGN AGENT RELATIONSHIP TO PRODUCE IN-EXPENSIVE HIGH PRODUCTIVITY SHIPS?
J.N. Spillane, Shipbuilding Consultants, Inc.

I ACCURACY CONTROL FOR U.S. SHIPYARDS
R.L. Storch, University of Washington

5:00 ADJOURNMENT

THURSDAY, AUGUST 25

7:30 REGISTRATION AMERICA LEVEL-FOYER
12:00

8:30 GENERAL SESSION AMERICA BALLROOM
SHIP PRODUCTION COMMITTEE PANEL OVERVIEWS
SESSION CHAIRMAN: E.L. Paterson
Peterson Builders, Inc.

I SNAME's SHIP DESIGN COMMITTEE OVERVIEW
R.S. Johnson, Westinghouse Defense & Electronics Systems Center

I THE 5-YEAR NATIONALSHIPBUILDING PRODUCTIVITY IMPROVEMENT PLAN SUMMARY
E. Petersen, Todd Pacific Shipyards, Inc.

I SP-2: OUTFITTING AND PRODUCTION AIDS
L.D. Chirillo, L.D.C. Associates

10:00 INFORMAL DISCUSSION PERIOD

I0:30 GENERAL SESSION AMERICA BALLROOM
SPC PANEL OVERVIEWS (contd)
SESSION CHAIRMAN: J. Acton
Todd Pacific Shipyards, Inc.

l SP-1 and 3: FACILITIES AND EVNIRONMENTAL EFFECTS
R. A. Price, Avondale Shipyards, Inc.

l SP-4: DESIGN/PRODUCTION INTEGRATION
F.B. Barham Jr., Newport News Shipbuilding

l SP-7: WELDING
B.C. Howser, Newport News Shipbuilding

12:00 LUNCH

I:30 GENERAL SESSION AMERICA BALLROOM
SPC PANEL OVERVIEWS (contd)
SESSION CHAIRMAN: F. B. Bsrham Jr.
Newport News Shipbuilding

l INTRODUCTION: SHIP PRODUCIBILITY RESEARCH PROGRAM
J.E. DeMartini, Bath Iron Works Corp.

l SP-6: THE NATIONALSHIPBUILDING STANDARDS & SPECIFICATION PROGRAM
T.M. O'Toole, Bath Iron Works

l SP-8: THE SHIPBUILDING INDUSTRIAL ENGINEERING PROGRAM
J.R. Phillips, Bath Iron Works

l SP-9: EDUCATION
H.M. Bunch, University of Michigan

3:00 INFORMAL DISCUSSION PERIOD

3:30 GENERAL SESSION AMERICA BALLROOM
SPC PANEL OVERVIEWS (contd)
SESSION CHAIRMAN: J. DeMartini
Bath Iron Works Corp.

. SP-10: FLEXIBLE AUTOMATION
J. Acton, Todd Pacific Shipyards, Inc.

l O-23-1: SURFACE PREPARATION AND COATINGS
J-W. Peart, Avondale Shipyards, Inc.

4:30 ADJOURNMENT

APPENDIX B: SPC/IREAPS TECHNICAL SYMPOSIUM ATTENDANCE LIST

SPC/IREAPS TECHNICAL SYMPOSIUM ATTENDANCE LIST

WESTIN HOTEL-COPLEY PLACE
BOSTON, MASSACHUSETTS

AUGUST 23-25, 1983

A-E-C AUTOMATION NEWSLETTER
7209 Wisteria Way
Carlsbad, CA 92008

E. Forest
Editor

AEGIS CORPORATION
250 Catalonia Avenue
Suite 705
Coral Gables, FL 33134

Robert F. Sherman
Vice President

ADVANCED MARINE ENTERPRISES, INC.
1725 Jefferson Davis Highway
Suite 1300
Arlington, VA 22202

Eric Byler

John J. Nachtsheim
President

ADVANCED TECHNOLOGY, INC.
2711 Jefferson Davis Highway
Suite 300
Arlington, VA 22202

Stephen Fisher
Group Leader

Thomas D. O'Connor
Sr. Systems Analyst

A&P APPLEDORE LIMITED
Northumbrian Way, Killingworth
Newcastle Upon Tyne
England NE12 OEH

M. Bell
Senior Production Engineer

John D. F. Craggs
Managing Editor

R. B. Sands
Director of A&P Appledore Operations Ltd.

ARTHUR ANDERSEN & COMPANY
911 Wilshire Blvd.
Los Angeles, CA 90017

Douglas W. Cunningham
Mgr., Mgmt Information Consulting Div.

ARTHUR ANDERSEN & COMPANY
One Financial Plaza
Hartford, CT 06103

William D. Green
Manager

Steve Marsh

AVONDALE SHIPYARDS, INC.
P. 0. Box 50280
New Orleans, LA 70150

H. F. Arnold
V. P. Data Processing

Samuel Bailey
Mgr. Standards

0. H. Gatlin
Vice President P. E. & Maintenance

John Peart
R&D Manager

Richard Price
Program Mgr. SP-1

James R. Wilkins, Jr.
Group Vice President-Engineering

BATH IRON WORKS CORPORATION
700 Washington Street
Bath, ME 04530

D. B. Cameron
Lt. U.S. Coast Guard

R. J. Crawford
Mgr. Systems Analyst

James E. DeMartini
MarAd Program Mgr.

Denis K. Dugan
VP-MIS

Jan R. Erikson
Dir. Program Engrg.

Joseph R. Fortin
Mgr. Mrktg Programs

Richard L. Grondin
Chief, Mach. Des. Sect.

Timothy D. Hurd
Sr. Production Planner

Paul D. James
Supv. Loft Prod. Control

Peter E. Jacquith
V. P. Prod./Plnng & Cntrl

S. E. Naylor
Systems Analyst

Thomas M. O'Toole
Project Engineer

Joseph R. Phillips
Project Engineer

W. D. Potter
Dir. of the Tech. Dept.

J. R. Vander Schaaf
Program Mgr. Adv. Shpbldg.
Technology & CAD/CAM

Walter M. Wales
Senior Project Engineer

BAY SHIPBUILDING
Sturgon Bay, WI

Robert Miller

Robert Reed

BENDER SHIPBUILDING & REPAIR CO., INC.
265 S. Water St.
P. O. Box 42
Mobile, Alabama 36601

David E. Lick
Systems Engineer

BETHLEHEM STEEL CORPORATION
Sparrows Point Yard
Sparrows Point, MD 21219

James P. Kozo
Project Manager

Rick Ralph

BETHLEHEM STEEL CORPORATION
Martin Tower Rm 1010
Bethlehem, PA 18016

R. E. Blackinton
General Manager, Operations & Facilities

BETHLEHEM STEEL CORPORATION
P.O. Box 3031
Beaumont, TX 77704

Barry F. Long
Assistant General Manager

Alan T. Sheppard
Assistant to General Manager

BOSTON SHIPYARD CORPORATION
256 Marginal St.
East Boston, MA 02128

Kammy Akaka
Planning Coordinator

Janet Swaysland
Industrial Engineer

BRITISH SHIPBUILDERS
Benton House
136 Sandyford Road
Newcastle-Upon-Tyne
ENGLAND NE2 10E

J. A. Haskell

D. R. Patterson
Sr. Manager, Tech. Service Dept.

George R. Snaith
Production Systems Advisor
Denis Welch

BROOKE MARINE LTD.
Heath Road
Lowestoff, Suffolk
England

D. J. Semken
Production Engineering Manager

BROWN & ROOT, INC.
P.O.B. 4302
Houston, Texas 77210

William G. Beazley
CADS Lead Engr.

Anil Raj
Engrg. Manager

CAL1 & ASSOCIATES, INC.
4401 W. Napoleon Ave.
Metairie, LA 70001

Fil Cali
President

F. Charrier, Jr.
Mgr. Mktg. & Eng.

Albercht Schulze
Vice President

CALMA
11075 Roselle St.
San Diego, CA 92121

Gerry Kirkpatrick
Software Design Engineer

CASE WESTERN RESERVE UNIVERSITY
2040 Adelbert
Cleveland, OH

H. W. Mergler
Professor

L. D. CHIRILLO ASSOCIATES
P. O. Box 953
Bellevue, WA 98009

Louis D. Chirillo

COLLINGWOOD SHIPYARDS
Collingwood, Ontario
Canada L9Y 3Z6

John J. Dougherty
Manager Systems/Planning

Alan J. Telfer
Chief Planner

COMPUTERVISION CORP.
201 Burlington Road
Bedrord, MA 01730

Richard H. Salter
Director of Market Development
Marine Industry

DAVID TAYLOR NAVAL SHIP R&D CENTER
Computer Aided Design & Mfg.
Bethesda, MD 20084

Robert L. Jenkins
Naval Architect

DAVIE SHIPBUILDING
P. O. Box 130
Lauzon, Quebec
Canada

Robert Miller
Production Engineer

Richard Deshaies
Pipe Fitting Manager

DEC
96 Phoenix Ave.
Enfield, CT

Glenn McLaughlin
Purchasing Manager

R.E. DERECKTOR OF R.I., INC.
Coddington Cove
Middletown, RI 02840

W. E. Christiansen, Jr.
Program Director

DESIGN MODELS, INC.
10311 Glasgow Place
Los Angles, CA 90045

Clyde A. Baumgardner
President

DESIGNERS & PLANNERS, INC.
1725 Jefferson Davis Hwy, Suite 700
Arlington, VA 22202

Conway D. Davis
V.P., Manager Field Offices

Michael R. Yriondo

DIXIE MACHINE WELDING & METAL WORKS, INC.
1031 Annunciation St.
P. O. Box 53355
New Orleans, LA 70153

Christian M. Voelkel, Jr.
President

GENERAL DYNAMICS
Electric Boat Div.
Eastern Point Rd.
Groton, CT 06340

John Alden, Jr.
Engrg. Supvr.

Roland G. Bourbon
Planning Chief

David M. Bower
Supvr. Trident Engine Rm

Joseph N. Broccolo
Program Planner

Michael H. Cardinal
Supvr. of Planning

Johan F. Collasius
Engineering Specialist

Raymond L. Dupuis
Chief of Planning

Ronald D. Fiscus
Engineering Specialist

William S. Haelsen
Plnng Supvr./Missile Area

Dick Hedler
Program Planner

Kenneth M. Hill
Mgr. Trade Planning

Robert E. Leeney
Chief Trident Plnng

Robert A. Mamoes
Manager Planning

Thomas F. McCarthy
Principal Engineer

Thomas G. Nickerson
Planning Supv.

Ralph W. Paige
Sr. Supvr.

George A. Peteros
Chief of Strut. Engrg.

David J. Piver
Program Planner

Joseph B. Ross
Engrg. Specialist

John Rubin
Supv. Planning

Norman P. Stram, Jr.
Planning Supervisor

Louis Vescovi
Plnng. Supervisor

GENERAL DYNAMICS
Quincy Shipbuilding Div.
97 E. Howard St.
Quincy, MA 02169

Donald Atkins
Mgr. of Naval Arch.

Lee C. Babb
Design Eng. CAD/CAM

Robert W. Baseler
Chief, Naval Arch.

Ted E. Davis
Design Supervisor

Lee A. Denney
IREAPS Rep.

John Dowling
CAD/CAM System Analyst

IIT RESEARCH INSTITUTE

GENERAL DYNAMICS (continued)
Quincy Shipbuilding Div.
97 E. Howard St.
Quincy, MA 02169

Paul Beck
Marine Engineer

Mayo E. Brown
Marine Design Engineer

Richard D. Buchanan
Programmer

William R. Clary, Jr.
Chief

Barry R. Cole
Sr.Engr/Methods Planner

Paul Grant, Jr.
Sr. Program Planner

Robert D. Horsefield
Advance Engineering

David C. Ruddock
Sr. Program Planner

David J. Willcock
Engineer

Martin G. Yapp
Sr. Marine Design Engr.

GENERAL DYNAMICS
Quonset Point
N. Kingston, R.I. 02554

Edward P. Greenberg
Supervisor Prod. Meth's Eng.

John M. Wallent
Chief of Automation Processes

GERBER CAMSCO, INC.
1200 N. Bowser Road
Ricahrdson, TX 75081

Joseph W. Wade
Industrial Systems Manager

GIANNOTTI & ASSOCIATES, INC.
703 Giddigns Ave.
Auiste U-3
Annapolis, MD 21401

Gary Vantassel

GIBBS & COX, INC.
119 West 31st St.
New York, NY 10001

Nino R. Addonizio
Vice President

GRUMMAN AEROSPACE
Bethpage, NY 11714

Charles Pieroth
Director - Naval Ship Systems

GRUMMAN DATA SYSTEMS CORP.
150 Crossways Park West
Woodburgy, NY 11797

Robert M. Skirkanich
Sr. Science Systems Analyst

MORRIS GURALNICK ASSOCIATES, INC.
1911 Jefferson Davis Highway
Arlington, VA 22202

Allen D. Evans
General Manager, East Coast Operations

HEMPELS MARINE
Foot of Currie Ave.
Wallington, NJ 07057

John Nydegger
General Manager

Jay H. Shubrook
National Manager Shipyards/Govt. Projects

J. J. HENRY CO., INC.
West Park Drive
Mt. Laurel Industrial Park
Moorestown, NJ 08057

Jon H. Matthews
Director of Computer Services

David F. McMullen

Gordon Plancich, Jr.
Supervisor SPADES Services

J. J. HENRY CO., INC.
2 World Trade Center
New York, New York 10048

Wesley D. Wheeler
Vice President

HOPEMAN BROTHERS, INC.
P.O. Box 820
Waynesboro, VA 22980

Eric Goetz
Project Manager

HYDE PRODUCTS INC.
810 Sharon Dr.
Cleveland, OH 44145

Thomas P. Mackey
President

IIT Research Institute
10 West 35th Street
Chicago, IL 60616

Edmund R. Bangs
IREAPS Executive Director

Richard L. Diesslin
Research Engineer

Margarita Hernandez
IREAPS Librarian

Pamela M. Slechta
IREAPS Marketing Specialist

INGALLS SHIPBUILDING
P.O. Box 149
Pascagoula, MS 39567

Jesse W. Brasher
Director, Productivity & Oper. Evaluation

Henry S. Bullock
Director, Industrial Engrg. & Manpower Planning

A. J. Morris
Manager, Interactive Graphics System

P. I. Presel
Director, Overhaul and Repair, Business Development

R. H. Slaughter, Jr.
Engrng. Technical Spclst, Sr. Advanced Technology

3. F. Smith
Dir. Design Engrg.

Ward F. Smith
Manager, Manufacturing Engineering

William Solitario
Director Advanced Tech.

INSTITUTE OF APPLIED TECHNOLOGY
P.O. Box 32331
Washington, DC 20007

Jay I. Leanse
Executive Director

I IT RESEARCH INSTITUTE

ITALCANTIERI
Corso Cavour 1
Trieste, Italy 34132

Renzo DiLuca
Project Leader EDP Hull Area

JACKSONVILLE SHIPYARDS, INC.
750 E. Bay St.
Jacksonville, FL 32203

Eric Anderson
Coordinator

LOCKHEED SHIPBUILDING AND CONSTRUCTION CO.
2929 16th Ave SW
Seattle, WA

L. W. Frank
VP Operations

Jess Sewell
Loft Engineer

LONG BEACH NAVAL SHIPYARD
Long Beach, CA 90822

O. Frank Nigro
Foreman Prog.

J. Renard
Head Computer Applications

MARINE ENGINEERING/LOG
345 Hudson St.
New York, NY 10014

Greg Ovechka
Senior Editor

MARINE INDUSTRIES LIMITED
P.O. Box 550
Sorel, Quebec, Canada J3P 5P5

Bernard Giguere
Assistant to the Vice-President

Donald Tremblay
Director of Production

Michael J. Waters
Director

MARINETTE MARINE CORPORATION
Ely Street
Marinette, WI 54143

John A. Booker
Hull Construction Manager

William J. Keller
Chief Structural Engineer

Ralph Larimer
Supervisor of Scheduling

MARITECH INCORPORATED
375 Concord Avenue
Belmont, MA 02178

L. Vassilopoulos
President

MARITIME ADMINISTRATION
U.S. Department of Transportation
400 Seventh Street, S.W.
Washington, D.C. 20590

John J. Garvey
Acting Director

Irvine D. Gessow
Naval Architect

John M. Hotaling
Engineering Manager

Freddie T. Johnson
Chief, Engrg. Computer Group

Robert McNaull
Computer Specialist

Joel C. Richard
Project Manager

Robert W. Schaffran
Program Manager

Thomas H. Vodicka
Manager, Shipbuilding Operations

MASSACHUSETTS INSTITUTE OF TECHNOLOGY
Cambridge, MA 02139

Ernst Frankel
Professor

J. N. Gonzales
Graduate Student

MASSACHUSETTS INSTITUTE OF TECHNOLOGY
Cambridge,MA 02139

Koichi Masubuchi
Professor of Ocean Engineering
and Materials Science

Vassilios J. Papzoglou
Research Engineer

UNIVERSITY OF MASSACHUSETTS
Marston Hall
Amherst, MA 01003

Robert J. Graves
Associate Professor

H. B. MAYNARD & CO.
12 Bank St.
Summimt, NJ 07901

W. L. Hagerty
Vice President

McDERMOTT SHIPYARDS
P.O. Box 588
Amelia, LA 70340

Bill Coneybear
Project Engineer

Francisco San Miguel
General Manager

McMICHAEL & ASSOCIATES
6601 Little River Turnpike
Suite 400
Alexandria, VA 22312

David L. McMichael
President

JOHN J. McMULLEN ASSOCIATES, INC.
2341 Jefferson Davis Highway
Suite 715
Arlington, VA 22202

Bernard L. Skeens
Senior Vice President

Richard W. Thorpe
Executive Vice President

I IT RESEARCH INSTITUTE

UNIVERSITY OF MICHIGAN
Ann Arbor, MI 48109

Howard McRaven Bunch
NAVSEA Professor of Ship Production

John G. Jessup
Engineering Research Associate

Michael G. Parsons
Professor and Chairman

Paul V. Vickers
Research Associate

MISSOURI VALLEY SHIPYARD
P. 0. Box 89
Leavenworth, TX 66048

W. Z. (Zack) Hayman
President & General Manager

NATIONAL ACADEMY OF SCIENCES
Marine Board
2101 Constitution Ave. N. W.
Washington, DC 20418

Michael E. Gaffney
Senior Staff Officer

NATIONAL RESEARCH COUNCIL
542 Merwins Lane
Fairfield, CT 06430

Robert B. Kurtz
Navy Shipyard Production

NATIONAL STEEL & SHIPBUILDING COMPANY
P.O. Box 85278
San Diego, CA 92138

C. L. French
President

Don Spanninga
Vice President, Materials and
Information Systems

Jack Wasserboehr
Senior Programmer Analyst

NAVAL MATERIAL COMMAND
Industrial Resources Detachment
Philadelphia, PA 19112

Walt Christensen
Engineer

David Fabry
Engineer

NAVAL MATERIAL COMMAND
Washington, D. C.

Jack McInnis
Dir. of Navy Mfg. Tech.

NAVAL SEA SYSTEMS COMMAND
Department of the Navy
Washington, DC 20362

Daniel W. Billingsley
DDG51 Computer Appl. Mgr.

Jimmy W. Fuller
Industrial Specialist (Shipbuilding)

T. P. Gallagher
Naval Architect

W. Page Glennie
Naval Architect

John Walker Hartigan
Director of Shipyard Training

Ronald K. Kiss
Asst. Depcom. for Surface Ship Acquisition

Joseph Lucie
Mine Countermeasure (MCM) Ship
Assistant Project Manager

Don G. Pettit
Branch Head - DK Mach.

NEWPORT NEWS SHIPBUILDING
4101 Washington Avenue
Newport News, VA 23607

F. Baxter Barham, Jr.
Program Manager, SP-4

B. C. Howser
Manager of Welding Engineering

Thomas J. O'Donohue
Director

NKK AMERICA INC.
450 Park Avenue
New York, NY 10022-2642

Shusuke Maeda
Naval Architect

NORFOLK NAVAL SHIPYARD
Portsmouth, VA 23709

J. E. DeFoor
Supervisor Industrial Engr.

Craig Kuehn
Engineer

Edward L. Wynne
Supvr. Industrial Engr.

NORFOLK SHIPBUILDING & DRY DOCK CORPORATION
P.O. Box 2100
Norfolk, VA 23501

W. D. Payne
Sr. V.P. of Production

UNIVERSITY OF NOTRE DAME
Haggar Hall
Notre Dame, IN 46556

D. Chris Anderson
Professor

OXYTECHNIK Ges. MbH
Frankfurter Strabe l0-14
D-6236 Eschborn 1
Germany

Michael Tomsig

G. Wilkens
President

PARSONS BRINCKERHOFF QUADE & DOUGLAS
120 Boylston St.
Bostson, MA 02116

Louis R. Nucci
Senior Engineer

PRECISION SYSTEMS ENGINEERING
1824 B East Gate Dr.
Mt. Laurel, NJ 08054

Donald C. Pette
President

PUGET SOUND NAVAL SHIPYARD
Bremerton, WA 98314

M. S. Wixson
Structural Group Supt.

RAYCHEM CORPORATION
300 Unicorn Park
Woburn, MA 01801

Steve Demeranville
Raychem Area Sales Manager

RAYTHEON SERVICE COMPANY
55 Broadway
Cambridge, MA 02142

Adam Apt
Senior Information Analyst

Gary Prowe
Senior Information Analyst

UNIVERSITY OF RHODE ISLAND
103 Gilbreth Hall
Kingston, RI 02881

Richard T. Hslieh
Assistant Professor

RICKOVER FOUNDATION
Washington, D. C.

Adm. Hyman G. Rickover
USN (Ret.)

ROBINSON, RODNEY A.
161 Elwyn Avenue
Portsmouth, NH 03801

Rodney A. Robinson
Consultant

M. ROSENBLATT 7 SON, INC.
350 Broadway
New York, NY 10013

Victor Jovino
Section Head, Scientific

Albert P. Wickham
Sr. Proj. Engineer

SEACOR
19 Perina Blvd.
Cherry Hill, NJ 08003

Thomas J. Kavanagh
Chief Engineer

SEAWORTHY ENG. SYSTEMS
17 Battery Place
New York, New York 10004

Charles W. Wilson
Vice President

SHIPBUILDING CONSULTANTS, INC.
P. 0. Box 849
Dickinson, TX 77539

Frank H. Rack
President

SHIPBUILDING CONSULTANTS, INC.
147 High Street
Mystic, CT 06355

Niel J. Spillane
Consultant

SHIPPING RESEARCH SERVICES, INC.
333 Clay St.
Suite 2550
Houston, TX 77002

Svein Hansen
President

Jesse Harkey
Manager

Jorn Oian

SOCIETY OF NAVAL ARCHITECTS AND MARINE ENGINEERS
One World Trade Center
Suite 1369
New York, NY 10048

Trevor Lewis-Jones

SOFTECH, INC.
460 Totten Pond Road
Waltham, MA 02154

Bob Fabrizio
Sr. Systems Engineer

Ed Farnsworth
System Consultant

Bill Helming

John Knobel
Principal Consultant

SPAR ASSOCIATES, INC.
927 West Street
Annapolis, MD 21401

Laurent C. Deschamps
President

Stephen M. Knapp
Sr. Planning Associate

STANLEY ASSOC.
1001 Conn Ave
Suite 904
Washington, DC

James A. Higgins
Partner

ST. LOUIS SHIP
611 East Marceau
St. Louis, MO 63111

George Hoffman
General Manager

Gary W. McCue
CAD/CAM Manager

TACOMA BOATBUILDING CO.
1840 Marine View Dr.
Tacoma, WA 98422

George H. Babcock
Director, Quality Assurance

Paul Williams
Vice President Production

TEMPLE, BARKER & SLOANE, INC.
33 Hayden Ave.
Lexington, MA 02173

Mitchell E. Steller
Maritime Consultant

THEODORE BARRY & ASSOCIATES
2800 River Road
Des Plaines, Illinois 60018

Larry McKay
V. P. Manufacturing Services

TODD PACIFIC SHIPYARD CORP.
710 Front Street
San Pedro, CA 90733

James B. Acton
Mgr. R&D

C. P. Buckley
Mgr. Engineering

P. Cromer
Design Engineer

Rick Lovdahl
Section Head-Hull Scientific

J. Maciel
Mgr. Weldilng Engineering

E. J. Petersen
Chairman Ship Production Committee-SNAME

F. Posthumus
Manager of Eng.

TOTAL TRANSPORTATION SYSTEMS, INC.
813 Forrest Drive
Newport News, VA 23606

Steiner Draegbo
Vice President & General Mgr.

Frank McConnell
Vice President

I IT RESEARCH INSTITUTE

TOTAL TRANSPORTATION SYSTEMS, INC. (continued)

813 Forrest Drive

Newport News, VA 23606

Steve Miller
Sales Manager

U.S. DEPARTMENT OF TRANSPORTATION
Transportation System Center
Kewndall Square
Cambridge, MA 02142

Bruce J. Weiers
Industry Economist

USA MODELS
500 Ellis Ave.
Colwyn, PA 19023

John W. Rohrer
Vice President

VICKERS SHIPBUILDING & ENGINEERING LTD.
Barrow Shipbuilding Works
Cumbira, England

James William Davidson
Engineering Production Manager

VOSPERTHORNYCROFT (UK) LIMITED
A Subsidiary of British Shipbuilders
223 Southampton Rd.
Paulsgrove, Portsmouth, PO6 4QA
England

M. G. B. Wannell
Electrical Design Manager

WALKER-NOVA
17 Rockdale St.
Worchester, MA 01606

Thorkild Jensen
Sales Engr./Mngr.

UNIVERSITY OF WASHINGTON
Seattle, WA 98195

Colin P. Hammon
Consultant

Richard Lee Starch
Research Assistant Professor

WESTINGHOUSE ELECTRIC CORP.
100 Penn Center Blvd.
Pittsburgh, PA

Kenneth T. Cooper
Manager, Computer Aided Engineering

WESTINGHOUSE DEFENSE & ELECTRONICS SYSTEMS CTR.
P. 0. Box 1897
Baltimore, MD 21203

Robert S. Johnson
Mgr. Ship Design

WESTINGHOUSE ELECTRIC CORP.
Defense Application Resource Team
1310 Beulah Road
Pittsburgh, PA 125235

E. Terrence Dailey
Marketing Engineer

WESTINGHOUSE - OFFSHORE POWER SYSTEMS
P. 0. Box 8000
Jacksonville, FL 32211

Donald R. Wantage
Group Supervisor

WILEY MANUFACTURING
P.O. Box 97
Port Deposit, MD 21904

Larry R. Snyder
Manager, Manufacturing Engineering

YARROW SHIPBUILDERS LIMITED
South Street, Scotstown,
Glasgow, Scotland

Samuel McComas
Methods Engineering Group Manager