SHIP PRODUCTION COMMITTEE
FACILITIES AND ENVIRONMENTAL EFFECTS
SURFACE PREPARATION AND COATINGS
DESIGN/PRODUCTION INTEGRATION
HUMAN RESOURCE INNOVATION
MARINE INDUSTRY STANDARDS
WELDING
INDUSTRIAL ENGINEERING
EDUCATION AND TRAINING

September 1991
NSRP 0340

THE NATIONAL SHIPBUILDING RESEARCH PROGRAM

1991 Ship Production Symposium Proceedings: Paper No. IVB-2 Areal Coverage Using Friction Surfacing

U.S. DEPARTMENT OF THE NAVY
CARDEROCK DIVISION,
NAVAL SURFACE WARFARE CENTER

Report Documentation Page

Form Approved
OMB No. 0704-0188

Public reporting burden for the collection of information is estimated to average 1 hour per response, including the time for reviewing instructions, searching existing data sources, gathering and maintaining the data needed, and completing and reviewing the collection of information. Send comments regarding this burden estimate or any other aspect of this collection of information, including suggestions for reducing this burden, to Washington Headquarters Services, Directorate for Information Operations and Reports, 1215 Jefferson Davis Highway, Suite 1204, Arlington VA 22202-4302. Respondents should be aware that notwithstanding any other provision of law, no person shall be subject to a penalty for failing to comply with a collection of information if it does not display a currently valid OMB control number.

1. REPORT DATE	2. REPORT TYPE	3. DATES COVERED
SEP 1991	**N/A**	**-**

4. TITLE AND SUBTITLE	
The National Shipbuilding Research Program, 1991 Ship Production Symposium Proceedings: Paper No. IVB-2: Areal Coverage Using Friction Surfacing	5a. CONTRACT NUMBER
	5b. GRANT NUMBER
	5c. PROGRAM ELEMENT NUMBER
6. AUTHOR(S)	5d. PROJECT NUMBER
	5e. TASK NUMBER
	5f. WORK UNIT NUMBER
7. PERFORMING ORGANIZATION NAME(S) AND ADDRESS(ES) **Naval Surface Warfare Center CD Code 2230-Design Integration Tools Bldg 192, Room 128 9500 MacArthur Blvd, Bethesda, MD 20817-5700**	8. PERFORMING ORGANIZATION REPORT NUMBER
9. SPONSORING/MONITORING AGENCY NAME(S) AND ADDRESS(ES)	10. SPONSOR/MONITOR'S ACRONYM(S)
	11. SPONSOR/MONITOR'S REPORT NUMBER(S)

12. DISTRIBUTION/AVAILABILITY STATEMENT
Approved for public release, distribution unlimited

13. SUPPLEMENTARY NOTES

14. ABSTRACT

15. SUBJECT TERMS

16. SECURITY CLASSIFICATION OF:			17. LIMITATION OF ABSTRACT	18. NUMBER OF PAGES	19a. NAME OF RESPONSIBLE PERSON
a. REPORT	b. ABSTRACT	c. THIS PAGE			
unclassified	**unclassified**	**unclassified**	**SAR**	**12**	

Standard Form 298 (Rev. 8-98)
Prescribed by ANSI Std Z39-18

DISCLAIMER

These reports were prepared as an account of government-sponsored work. Neither the United States, nor the United States Navy, nor any person acting on behalf of the United States Navy (A) makes any warranty or representation, expressed or implied, with respect to the accuracy, completeness or usefulness of the information contained in this report/ manual, or that the use of any information, apparatus, method, or process disclosed in this report may not infringe privately owned rights; or (B) assumes any liabilities with respect to the use of or for damages resulting from the use of any information, apparatus, method, or process disclosed in the report. As used in the above, “Persons acting on behalf of the United States Navy” includes any employee, contractor, or subcontractor to the contractor of the United States Navy to the extent that such employee, contractor, or subcontractor to the contractor prepares, handles, or distributes, or provides access to any information pursuant to his employment or contract or subcontract to the contractor with the United States Navy. ANY POSSIBLE IMPLIED WARRANTIES OF MERCHANTABILITY AND/OR FITNESS FOR PURPOSE ARE SPECIFICALLY DISCLAIMED.

THE SOCIETY OF NAVAL ARCHITECTS AND MARINE ENGINEERS
601 Pavonia Avenue, Jersey City, N.J. 07306

Paper presented at the 1991 Ship Production Symposium.
The Pan Pacific Hotel, San Diego, California. September 3-6 1991.

Areal Coverage Using Friction Surfacing

IVB-2

Peter Lambrineas, Visitor, and Peter Jewsbury, Visitor, Defence Science and Technology Organization, Australia

ABSTRACT

Area1 coatings of 304 and 316 marine grade stainless steel were made on flat mild steel substrates using a low-pressure friction surfacing technique and various deposition configurations. The maximum through-thickness tensile bond strength obtained for such coatings was 890MPa (1.3 x 10^5 psi). Gaps and/or cracks between strips of deposited material were:not eliminated completely during the manufacture of these coatings. Consequently, the overlay coatings described in this paper which were made using a range of overlapping and non-overlapping deposition configurations, are primarily suitable for applications in non-corrosive environments.

INTRODUCTION

Friction surfacing is a variation of a friction joining technique which first patented by Klopstock and Neelands[1] in 1941. During the 1980's this technique experienced a resurgence of interest[2,3,4,5,6 and 7]. In friction surfacing a metallic bar is rotated and forced axially against a metallic substrate (Figure la). The heat generated by the bar rubbing against the substrate causes the end of the bar to soften and plasticise (Figure lb). The substrate is traversed across the end of the bar transferring a strip of the bar material onto the substrate (Figure 1c).

The width, thickness and quality of the adhesive bond between the deposited strip of material and the substrate are dependent on the process parameters and the materials used[7]. Typically for deposits made at low frictional pressures[7and8] the width of the deposited material is 60-90% of the original bar diameter and the deposit can be 1-3mm (0.04 - 0.12 in) thick. Results from through thickness tensile tests indicate that bond strengths approaching the ultimate yield strength of the deposited material can be achieved by optimization of the process conditions[8].

Area1 coverage of a substrate can be achieved by the deposition of several adjacent strips of the consumable bar material. For many applications such as protection of components from abrasion

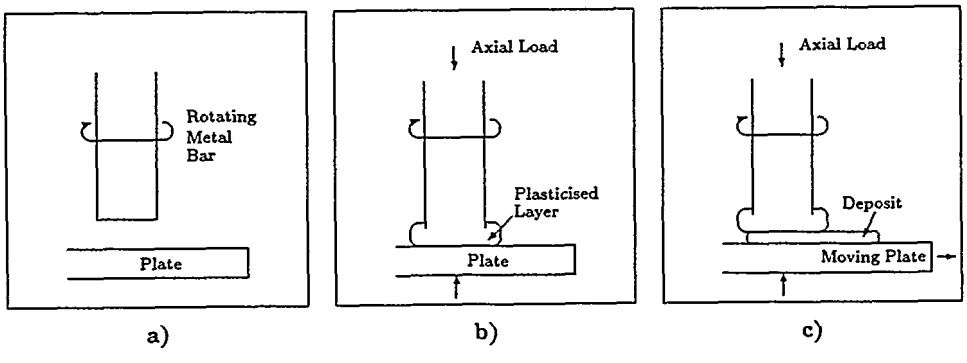

Figure 1: Schematic representation of friction surfacing process.
a) Rotating metal bar brought to required speed above metal plate.
b) Rotating bar loaded axially against plate until plasticed layer forms at end of bar.
c) Metal plate traversed across rotating bar leaving behind a well bonded deposit.

damage it may not matter if there are small gaps between these overlay strips. However for other applications where the integrity of the overlay is important it is necessary to avoid such voids.

Using a low-pressure friction surfacing technique[7] developed at the Materials Research Laboratory (MRL) we have looked at two methods of areal coverage, one which attempts to reduce/avoid such gaps and one that does not. Emphasis in this investigation was placed on methods which required minimal surface preparation during the overlay coating procedure. Such methods are clearly advantageous in industrial applications of friction surfacing as they reduce both the total cost and process time required. Single and multiple coatings of marine grade 304 and 316 stainless steel, laid in various configurations, were produced and the through thickness tensile bond strengths were determined.

MARITIME/NAVAL APPLICATIONS OF FRICTION SURFACING

It is envisioned that friction surfacing will have applications in the five general areas listed below. Note however that additional research and development is required before some of these applications become commercially viable.

Reclamation. Components which can be reclaimed using friction surfacing include camshafts, crankshafts and propeller shafts used in a maritime environment. FRICTECH, a British company offers such services on a commercial basis. Cost savings can be realised by a combination of increased component lifetimes and reduced inventories. In addition, using other developments, it may be possible to refurbish propeller shafts in situ, thus reducing significantly the time required in dry dock facilities during a major refit. This would be particularly applicable to submarine refits.

Hardfacing. This capability has been demonstrated by the deposition of a hard tool steel onto aluminium substrates. This procedure has many uses such as the production of dual hardness armour. An example of its primary use on wear surfaces could be to build up shafts at journal sites to provide a wear restistant deposit.

Corrosion. Corrosion protection could be achieved at reduced cost by using the friction surfacing techniques to bond an expensive corrosion resistant steel surface layer onto a cheaper steel substrate. This approach is well suited for components used in marine environments. In particular friction surfacing may be a competitor for chromium plating of marine components in situations where size, shape or hydrogen embrittlement is a problem.

Joining. Metal plates could be joined during manufacture using a friction surfacing technique. As the processes involved in friction surfacing are solid state rather than fusion the metal plates do not need to be pre-heated as in many welding operations. The heat affected zone due to the friction surfacing procedure is small and therefore the previous heat treatment of the component is only minimally affected.

Repair. Minor damage to steel plates could be repaired in the field using portable friction surfacing equipment. Cracks can be sealed and strength provided to a steel plate by friction surfacing an overlay deposit along the crack. Alternatively, hole repair and crack patching could be achieved by placing a metal section over the hole/crack and then depositing an overlay coating between the plate and the metal section. Friction surfacing does not require the use of bottled gases as in welding and is therefore not limited by the availability of such gases. Preliminary research indicates that friction surfacing will work under water[7]. Consequently it is particularly suitable for maritime/naval applications including submarine field repairs.

EXPERIMENTAL METHOD

Friction Surfacing Equipment

A schematic representation of the equipment used for low-pressure friction surfacing is shown in Figure 2. A pneumatic ram and substrate holder were added to a standard Heidenreich and Harbeck VDF research lathe. The maximum axial load permissible with the standard lathe headstock bearing system is 4.9kN. Additional details can be found in Jenkins and Doyle[7].

The substrate holder was attached to the cross feed mechanism of the lathe as shown in Figure 2. During the deposition process a free sliding metal plate with an attached teflon sheet, located at the rear of the substrate holder, permitted the load from the pneumatic ram to be applied colinearly with the rotation axis of the consumable bar as the cross feed mechanism was used to translate the substrate. Metal plates with maximum dimensions of 300mm x 140mm x 20mm (12" x 5.5" x 0.8") were attached to the substrate holder using two bolts.

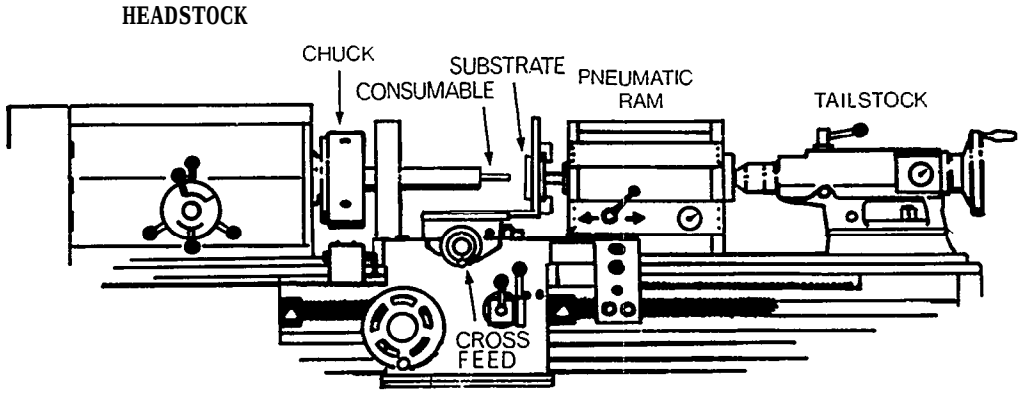

Figure 2.
Schematic representation of equipment used for friction surfacing.

Sample Preparation

Consumables were made from 19mm (3/4") diameter 304 and 316 stainless steel bar. The bars were cut into 105mm (4") lengths and a 45mm (1.8") long, 19mm (3/4") BSW thread was cut into one end of each consumable. The consumables were screwed into a holder which was designed to be clamped in the lathe chuck.

Substrates were prepared in two sizes from 10mm (0.4") thick bright mild steel plate. These comprised of 230mm x 75mm (9" x 3") and 140mm x 140mm (5½" x 5½") sections which were milled to a surface roughness which ranged between a centre line average of 0.7μm and 1.5μm. Consumables and substrates were cleaned with ethanol immediately before use.

Experimental procedure

All deposits were made at room temperature and pressure in an ambient air environment. Prior to commencing the surfacing process the desired axial load was obtained by adjustment of the pressure relief valve on the pneumatic ram while the consumable and substrate were stationary and in contact. With the consumable and substrate separated the lathe was brought to the required rotational speed. Subsequently the pneumatic ram was engaged at the pre-set load forcing the substrate into contact with the rotating consumable. A dwell time between 5 and 7 seconds was sufficient for the region near the end of the consumable to platicise and glow white hot. At this time the cross feed mechanism of the lathe was engaged and the substrate was translated across the face of the rotating consumable leaving behind a strip of consumable material deposited on the substrate. When the deposited strip was of the desired length, the pneumatic ram was disengaged which also withdrew the substrate from contact with the consumable.

The process conditions required to produce 304 and 316 stainless steel deposits of uniform width at the lowest possible frictional pressure are listed in Table I. Deposits were made with the substrate normal inclined at several angles 0, 5, 10, and 15" to the consumable rotation axis (see Figure 3). Those deposits made with n = 0 were

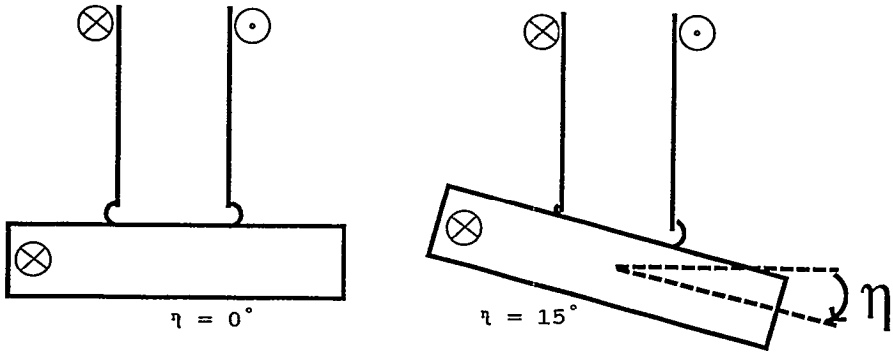

Figure 3.
Geometric relationships adopted for friction surfacing. The symbol, 0, represents movement in a direction into the plane of the paper while, 0, represents movement in a direction out of the paper.

found to have a cross sectional shape which resembled a wedge. It was expected that by overlapping such wedge shape strips a full area1 coverage could be built up without guarding against poor cohesion between the different deposits.

Transverse cross sections were prepared from 304 and 316 deposits for optical micrographs. These were polished using standard metallographical techniques and were etched with a 2% nital solution.

Through-Thickness Tensile Test

Through-thickness bond strength is defined as the tensile adhesive stress required to separate a deposit from the substrate.

The through-thickness tensile test specimens used in this investigation to evaluate the bond strength were made by friction welding a stud, of same material, to the surface of the deposited coating (see Figure 4a). A good bond was obtained between the friction welded stud and the deposit by grinding smooth the surface of the deposit at the position where the stud was to be attached. A segment of the substrate containing the friction welded stud was cut from the remaining substrate. Material was then removed from the stud, deposit and substrate by machining (see Figure 4b). The through-thickness tensile test specimen had a gauge length of 15mm and a gauge diameter of 5mm. The specimens were loaded to failure in an Amsler universal testing machine and the maximum load recorded.

RESULTS

The deposition control parameters were selected in order to obtain the lowest axial load which produced uniform deposits at an inclination angle n = 0°. These conditions for 304 and 316 stainless steel are listed in Table I.

A cross sectional view of 304 stainless steel deposited on a mild steel substrate at n angles of 5, 10, and 15° is shown in Figure 5. Note that the depth of the heat affected zones beneath each deposit is approximately equivalent to the maximum thickness of the deposit.

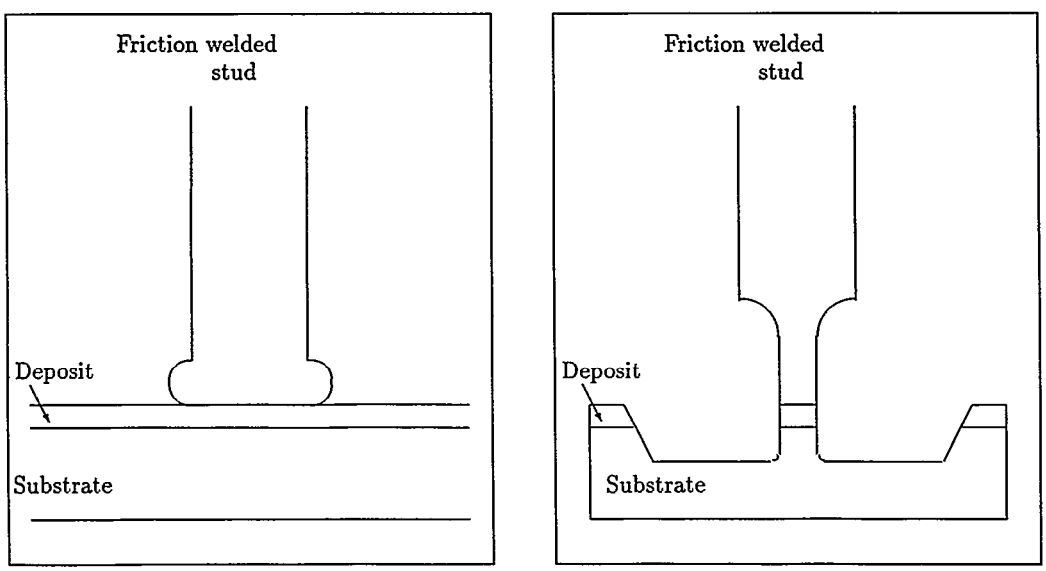

a) b)

Figure 4.
Manufacture of through-thickness tensile test specimens.
a) Attachment of a fricton welded stud to a deposit material bonded to a substrate by friction surfacing.
b) Remove of stud, deposit and substrate material by machining to produce tensile test specimens.

Table I. Friction surfacing process conditions for uniform deposits at a frictional pressure of 10.6 MPa.

		Material	
		304	316
Inclination Angle	Consumable Rotation (rpm) Cross-Feed Translation (rpm)	1400 497	1400 497
0°	Average Thickness (mm) Average Width (mm)	1.3 14	1.0 12
5°	Maximum Wedge thickness (mm) Average Width (mm)	1.5 12	- -
10°	Maximum Wedge thickness (mm) Average Width (mm)	2.5 14	
15°	Maximum Wedge thickness (mm) Average Width (mm)	4.0 17	

Figure 5.
Cross sectional view of 304 stainless steel deposits made at η angles of 5, 10 and 15°. Note the heat affected zone extending from the apex of each wedge-like deposit.

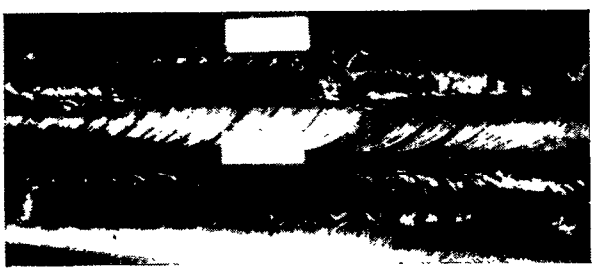

Figure 6.
Deposits of 316 stainless steel made at η angles of 5° (top) and 10 (bottom). Note non uniform width of deposits.

Measurements for the thickness and widths of 316 stainless steel deposits made at η # 0 are not given in Table I. These deposits (typical examples shown in Figure 6) were not considered sufficiently uniform to be useful for area coverage.

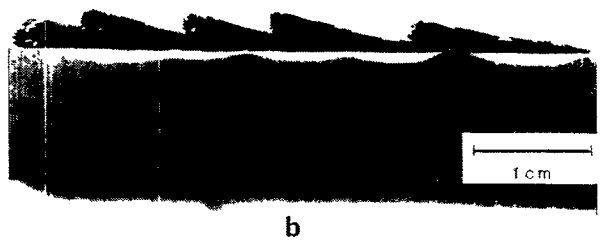

b

Figure 7.
Series of overlapping 304 stainless steel deposits made at an inclination angle of 15°.
a) Plan view of overlapping deposits which were started from left hand edge of figure. Apex of each wedgelike deposit is closest to bottom of figure.
b) Transverse cross section through a position near the start of the coating shown in Figure 7a. Note the overlap of each heat affected zone located below individual deposits.

The 304 stainless steel coatings at an inclination angle η :t = 15" produced the most uniform of the η = 0 deposits listed in Table I. An example of overlapping 304 deposits made with an angle of inclination of η = 15" is shown in Figure 7a. In Figure 7a all deposits were started from the left hand end of the substrate and the thin part of the wedge for each deposit is closest to the bottom of the figure. A cross section made near the start of these overlapping deposits is shown in Figure 7b. The extent of the overlap between deposits shown in Figure 7b ranged from 20% to 65%. However overlaps of up to 80% were obtained for some samples (see also part of the first deposit strip in Figure 7a).

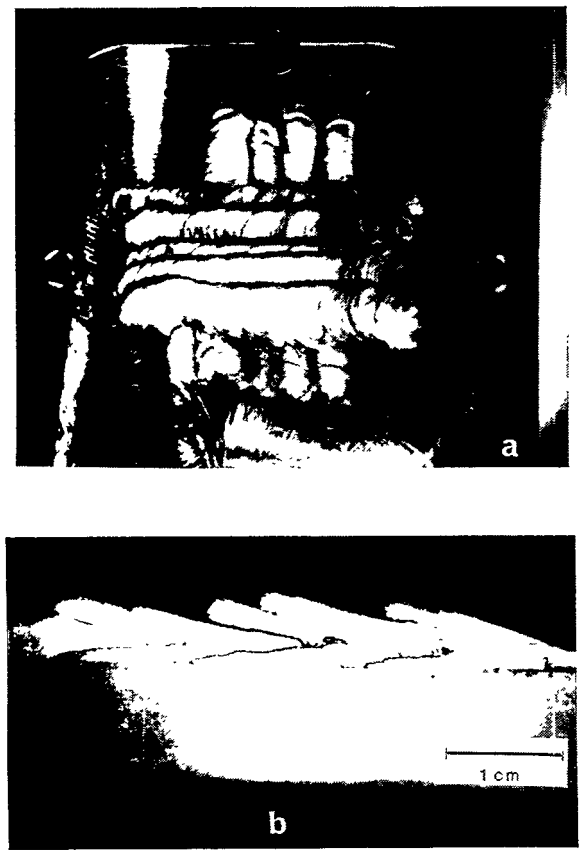

Figure 8.
Multiple overlay coating of 304 stainless steel made at an η angle of 15'.
a) Four overlapping deposits are partially covered by a second series of five overlapping deposits made in a direction orthogonal to the original coating direction.
b) Cross sectional view of the sample shown in Figure 8a, taken in a plane which bisected the two orthogonal traverse directions.

In Figure 8a can be seen a multiple overlay coating of 304 stainless steel deposited with an inclination angle of 15". The first coating consisted of a series of four overlapping deposits. This coating was partially covered with the second series of five overlapping deposits which were deposited with a traverse direction orthogonal to the original coating direction. A cross sectional view is shown in Figure 8b of this multiple overlay coating, taken in a plane which bisected the two coating traverse directions of Figure 8a.

A cross sectional view is shown in Figure 9a of a coating produced with an alternative approach for area1 coverage of a flat substrate. The coating was made using an inclination angle of 0° and depositing strips of 316 stainless steel with a gap of slightly less than the width of one deposit between the strips. A second set of strips of 316 material were deposited in these gaps. This method produced coatings which were much more uniform in thickness than the coatings made at non zero angles of inclination. On completion of such a coating no obvious gaps between the individual deposits were visible at the surface to the naked eye. However hairline gaps between the deposits can

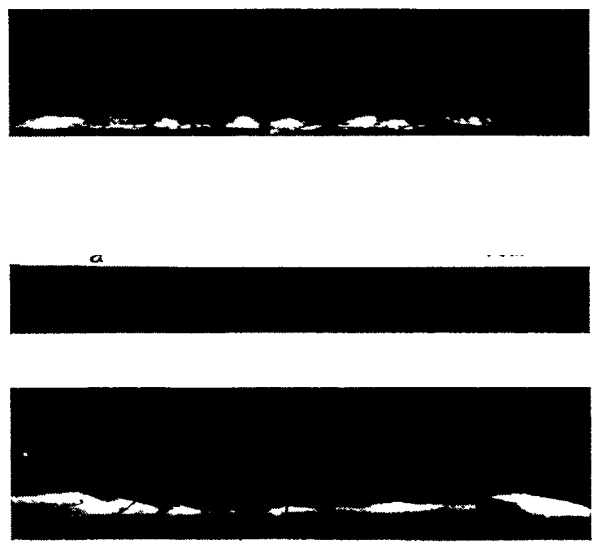

Figure 9.
Areal coating of 316 stainless steel made at an η angle of 15".
a) Cross sectional view.
b) Magnified cross sectional view of sample shown in Figure 9a.

Deposition Condition	Bond Strength (MPa)	
	304 deposits	316 deposits
$\eta := 0°$, single pass	630	890
$\eta := 15°$, single pass	702	827
$\eta := 15°$, overlay, dual pass no grinding	*	-
$\eta := 15°$, overlay, dual pass with grinding	334	-

Table II. Through-thickness tensile bond strengths near the start of deposits made using the process conditions listed in Table I. Note (-) indicates that the material was not suitable for overlay deposits and (*) indicates that the specimen broke while being machined into a tensile specimen.

clearly be seen in the magnified, transverse cross section shown in Figure 9b.

Through-thickness tensile bond strengths were measured near the start of several typical deposits. Representative results for the bond strengths of such 304 and 316 stainless steel deposits near the start of the deposit are listed in Table II.

During the tensile tests all specimens fractured at or across the deposit substrate interface. No specimen failed at the deposit stud interface.

DISCUSSION

An important requirement for many applications is an area1 coating which is devoid of gaps or cracks. Many manufactured components operate in hostile environments and if such gaps/cracks exist in a friction surfaced coating then it is likely that the coating may eventually debond/fail through the action of corrosion at these sites. Consequently a number of different equipment configurations, as described in the previous section, were examined in an attempt to reduce or eliminate these potential failure sites.

The equipment configurations can be divided into two categories, one which involves deposition with a zero angle of inclination and the other with a non zero angle of inclination.

Non Zero Angle of Inclination Coatings

An important feature of the friction surfacing process is the disruption of the interface between the consumable bar and the substrate. This disruption may lead to simple mechanical keying of the deposit or, when the conditions lead to the removal of surface contaminants, to full metallurgical bonding.

The standard friction surfacing process can be modified by utilizing a non zero angle of inclination and overlapping the resultant strips of wedgelike deposits. This procedure disrupts simultaneously the consumable to substrate and consumable to (previously layed consumable) strip interfaces, hopefully eliminating hairline gaps between adjacent strips of deposit material.

The angle of inclination for 304 stainless steel used in area coverage deposits was selected after examination of a series of trial deposits made at angles of 5, 10 and 15 (see Figure 5). The width and thickness (at the thickest part of the wedge) of each deposit was uniform. In addition the heat affected zone in the substrate material was located towards the apex of the wedge (see Figure 5) for all deposits. It can be inferred from this characteristic that the adhesion between the deposit and substrate decreases as distance from the apex increases. Therefore if the angle of inclination is increased too much the part of the deposit away from the apex will be become poorly bonded. Note that the thickest regions of each wedge (Figure 5) are not bonded to substrate.

The maximum inclination angle permitted for good bonding is material dependent and probably sensitive to the reactivity of the consumable to atmospheric constituents. Thus it has been found that good deposits of 304 stainless steel can be made at inclinations up to 15°, while an angle as small as 5° produces unsuitable deposits of 316 stainless steel.

It is clear, from Figure 5 and Table I, that the maximum amount of material was deposited on the substrate for an inclination angle of 15°. This bulkier deposit was advantageous since

the sawtooth cross section produced from partially overlaying a series of such deposits (see Figure 7b) could be removed by grinding to produce a flat coating which was 1-2mm thick. Such a procedure also removes the non bonded region of the deposit at the thick end of the wedge. Consequently, all 304 stainless steel coatings were made at an inclination angle of 15". This bulkier deposit was advantageous since the sawtooth cross section produced by partially overlaying a series of such deposits (see Figure 7b) could be removed by grinding to produce a flat coating which was l-2 mm (0.04-0.08") thick. Such a procedurew also removes the non bonded region of the deposit at the thick end of the wedge. Consequently, all 304 stainless steel coatings were made at an inclination angle of 15".

All 316 stainless steel deposits made at non zero angles of inclination had a non uniform width (see Figure 6) and were therefore considered to be unsuitable for this type area1 coverage. However the through-thickness tensile bond strength of 827MPa (1.2 x 10^5 psi) for a single strip of 316 deposited with an inclination angle of 15" compared very favourably with the bond strength of 890 MPa (1.3 x 10^5 psi) for 316 deposited with an inclination angle of 0° (Table II). The bond strength for 304 stainless steel (Table II) increased from 630 MPa (9.1 x 10^4 psi) to 702 MPa (1 x 10^5 psi) as increased from 0 to 15" respectively. This small increase of bond strength provides further evidence that 304 stainless steel is suitable for use in areal coverage applications.

Tensile test specimens made from a 304 stainless steel coating similar to that shown in Figure 7, deposited using an inclination angle of 15" and an 80% overlap between individual strips of material broke at the interface between the overlapping to underlying deposits during machining. However the bond strength increased to 334MPa (Table II) for coatings made by grinding the surface of each deposited strip prior to friction surfacing the next overlapping strip of material. All tensile test specimens were made in regions devoid of cracks and gaps. Consequently the through-thickness tensile bond strengths listed in Table II are indicative of the bonds strengths available from coatings which are both uniform and homogenous.

It can be seen from Figure 7b that gaps occur between the overlapping 304 stainless steel deposits. These gaps are observed to be larger and often extend directly to the substrate material between deposits which have only a small degree of overlap. The gaps between deposits with greater than 40-50% overlap are intermittent and regions can be observed where full metallurgical bonding occurs between the adjacent deposit strips (see Figure 7c). Deposits with an overlap of approximately 80% exhibit consistent metal to metal bonding not only at the deposit to substrate interface but also in the region near the apex of the deposit to deposit interface.

All 304 stainless steel deposits within the range of 20% to 80% overlap were well adhered to the substrate irrespective of whether gaps existed between adjacent deposit strips. Consequently such coatings produced without surface preparation between each deposit are suitable for applications in non corrosive environments. Coatings made by friction surfacing for use in corrosive environments require that the overlap between adjacent deposits is approximately 80% to minimise the formation of-gaps. Alternately if a smaller overlap or additional bond strength is needed the surface of the deposit must be prepared (e.g. by grinding) prior to overlapping additional material.

5.2 Zero Angle of Inclination Coatings

Coatings of 304 and 316 stainless steel where made at an ϟ angle of 0° using the procedure described briefly in section 3. It can be seen from Table II that 316 deposits made in this configuration had a through-thickness tensile bond strength of 890MPa which was significantly better than the 630MPa achieved with comparative deposits of 304 stainless steel.

Although gaps between adjacent strips of deposited 316 material are not obvious to the naked eye (Figure 9a), they can be discerned clearly in the magnified image shown in Figure 9b. In addition there are cracks visible within some of the deposit strips shown in Figure 9b, caused by thermal stresses upon cooling of the deposit substrate combination. Clearly, such gaps and cracks which extend the entire thickness of the deposited coating preclude this type of coating being suitable for use in corrosive environments without further surface preparation. However this coating configuration using 316 stainless steel had the best bond strength between the deposit and substrate and is therefore acceptable for applications in non corrosive environments.

6.0 Conclusions

At low frictional pressures and with no surface preparation between overlapping deposits it was found that 304 stainless steel is suitable for

areal coverage using non zero inclination angles while 316 stainless steel is only suitable for deposits made with zero angles of inclination. However these areal deposits are suitable only for applications in non corrosive environments as the cracks/gaps between individual strips of deposited material are not eliminated in the manufacturing process.

Friction surfaced areal coatings for use in corrosive environments require that the surface of each deposited strip of material is prepared by a procedure such as grinding. Such preparation provides a smooth clean surface to which a subsequent deposit adheres without the formation of gaps or cracks which extend through the coating to the substrate surface. This additional surface preparation increases the costs of manufacturing such components.

Acknowledgments

The authors wish to thank Mr. G.D. Healy, Mrs S. Bonassin and Mrs H. Heaney for their valuable assistance in collecting the data and preparing some of the figures for this manuscript.

References

1 H. Klopstock and A.R. Neelands - Patent specification "An Improved Method of Joining or Welding Metals", Ref. 572789, application date 17 Oct. 1941.

2 G.M. Bedford and P.J. Richards, "Recent Developments in Friction Coating", Conference on Repair and Reclamation, London UK, 24-35 Sep. 1984, (Pub. Abington, Welding Instit.,pp. 111-115, 1986).

3 G.M. Bedford and P.J. Richards, "On the Absence of Dilution" in Friction Surfacing and Lateral Friction",1st International Conference on Surface Engineering Proc., Brighton UK, paper 70, June 1985.

4 W.M. Thomas and S.B. Dunkerton, Friction Surfacing", The Welding Institute Research Bul., vol. 25, pp. 327-331, Oct. 1984.

5 W.M. Thomas, E.D. Nicholas and S.B. Dunkerton, "Feasibility Studies into Surfacing by Friction Welding", The Welding Institute Research Report, No. 236, Apr. 1984.

6 W.M. Thomas, "An Introduction to Friction Surfacing", 1st International Conference on Surface Engineering Proc., Brighton UK, paper 66, June 1985.

7 B.M. Jenkins and E.D. Doyle, "Advances in Friction Deposition - Low Pressure Friction Surfacing", International Tribology Conference Proc., Melbourne Aust.,pp. 87-94, Dec. 1987.

8 P. Lambrineas, B.M. Jenkins and E.D. Doyle, "Low Pressure Friction Surfacing: Adhesion of Stainless Steel Coatings on Mild Steel", International Tribology Conference Proc.,Brisbane Aust., pp. 12-15, 1 Dec. 1990.

Additional copies of this report can be obtained from the
National Shipbuilding Research and Documentation Center:

http://www.nsnet.com/docctr/

Documentation Center
The University of Michigan
Transportation Research Institute
Marine Systems Division
2901 Baxter Road
Ann Arbor, MI 48109-2150

Phone: 734-763-2465
Fax: 734-936-1081
E-mail: Doc.Center@umich.edu