NAVAL POSTGRADUATE SCHOOL

MONTEREY, CALIFORNIA

THESIS

WARSHIP COMBAT SYSTEM SELECTION METHODOLOGY BASED ON DISCRETE EVENT SIMULATION

by

Jose M. Gomez Torres

September 2010

Thesis Co-Advisors: Clifford Whitcomb
Fotis Papoulias

Approved for public release; distribution is unlimited

THIS PAGE INTENTIONALLY LEFT BLANK

REPORT DOCUMENTATION PAGE			Form Approved OMB No. 0704-0188

Public reporting burden for this collection of information is estimated to average 1 hour per response, including the time for reviewing instruction, searching existing data sources, gathering and maintaining the data needed, and completing and reviewing the collection of information. Send comments regarding this burden estimate or any other aspect of this collection of information, including suggestions for reducing this burden, to Washington headquarters Services, Directorate for Information Operations and Reports, 1215 Jefferson Davis Highway, Suite 1204, Arlington, VA 22202-4302, and to the Office of Management and Budget, Paperwork Reduction Project (0704-0188) Washington DC 20503.

1. AGENCY USE ONLY *(Leave blank)*	2. REPORT DATE September 2010	3. REPORT TYPE AND DATES COVERED Master's Thesis

4. TITLE AND SUBTITLE Warship Combat System Selection Methodology Based on Discrete Event Simulation	5. FUNDING NUMBERS
6. AUTHOR(S) Jose M. Gomez	
7. PERFORMING ORGANIZATION NAME(S) AND ADDRESS(ES) Naval Postgraduate School Monterey, CA 93943-5000	8. PERFORMING ORGANIZATION REPORT NUMBER
9. SPONSORING /MONITORING AGENCY NAME(S) AND ADDRESS(ES) N/A	10. SPONSORING/MONITORING AGENCY REPORT NUMBER

11. SUPPLEMENTARY NOTES
The views expressed in this thesis are those of the author and do not reflect the official policy or position of the Department of Defense or the U.S. Government. IRB Protocol Number: _____N/A____.

12a. DISTRIBUTION / AVAILABILITY STATEMENT	12b. DISTRIBUTION CODE
Approved for public release; distribution is unlimited	A

13. ABSTRACT (maximum 200 words)

This thesis presents the development of a methodology for the conceptual design of a medium tonnage warship's combat system for the Colombian Navy. The methodology is oriented toward the optimization of the operational effectiveness within the naval ship design constraints of weight, electrical power, volume, cost, and risk. The methodology is based on a Design Reference Mission (DRM), which is composed of four Operational Situations (OPSITs) covering antisubmarine warfare, anti-air warfare, mine warfare, and surface warfare.

The OPSITs are represented by coupled physics-based models and probabilistic models. A discrete event simulation tool, ExtendSim®, is used to implement these models, yielding quantitative results for mission success. Design of Experiments (DOE) is used to explore the design space, allowing identification of the main effects in each OPSIT model and the impact of each variable in the respective Measure of Effectiveness (MOE).

The four OPSIT MOEs are integrated in a single Overall Measure of Effectiveness (OMOE) allowing the comparison among different configurations of combat systems, which is used to determine the best overall ship design to meet operational requirements.

14. SUBJECT TERMS Combat System Design, Design of Experiments, Design Reference Mission, Discrete Event Simulation, Measure of Effectiveness, Operational Situation, Surface Combatant.	15. NUMBER OF PAGES 151
	16. PRICE CODE

17. SECURITY CLASSIFICATION OF REPORT	18. SECURITY CLASSIFICATION OF THIS PAGE	19. SECURITY CLASSIFICATION OF ABSTRACT	20. LIMITATION OF ABSTRACT
Unclassified	Unclassified	Unclassified	UU

NSN 7540-01-280-5500 Standard Form 298 (Rev. 2-89)
Prescribed by ANSI Std. 239-18

THIS PAGE INTENTIONALLY LEFT BLANK

Approved for public release; distribution is unlimited

WARSHIP COMBAT SYSTEM SELECTION METHODOLOGY BASED ON DISCRETE EVENT SIMULATION

Jose M. Gomez Torres
Lieutenant Commander, Colombian Navy
B.S.E.E., Colombian Naval Academy, 2006

Submitted in partial fulfillment of the
requirements for the degrees of

MASTER OF SCIENCE IN MECHANICAL ENGINEERING
and
MASTER OF SCIENCE IN SYSTEMS ENGINEERING

from the

NAVAL POSTGRADUATE SCHOOL
September 2010

Author: Jose M. Gomez Torres

Approved by: Clifford Whitcomb
Thesis Co-Advisor
Chairman, Department of Systems Engineering

Fotis Papoulias
Thesis Co-Advisor

Knox Millsaps
Chairman, Department of Mechanical and Astronautical Engineering

THIS PAGE INTENTIONALLY LEFT BLANK

ABSTRACT

This thesis presents the development of a methodology for the conceptual design of a medium tonnage warship's combat system for the Colombian Navy. The methodology is oriented toward the optimization of the operational effectiveness within the naval ship design constraints of weight, electrical power, volume, cost, and risk. The methodology is based on a Design Reference Mission (DRM), which is composed of four Operational Situations (OPSITs) covering antisubmarine warfare, anti-air warfare, mine warfare, and surface warfare.

The OPSITs are represented by coupled physics-based models and probabilistic models. A discrete event simulation tool, ExtendSim®, is used to implement these models, yielding quantitative results for mission success. Design of Experiments (DOE) is used to explore the design space, allowing identification of the main effects in each OPSIT model and the impact of each variable in the respective Measure of Effectiveness (MOE).

The four OPSIT MOEs are integrated in a single Overall Measure of Effectiveness (OMOE), allowing the comparison among different configurations of combat systems, which is used to determine the best overall ship design to meet operational requirements.

THIS PAGE INTENTIONALLY LEFT BLANK

TABLE OF CONTENTS

I. INTRODUCTION....1
- A. BACKGROUND OF STUDY....1
- B. PURPOSE OF STUDY....2
- C. BENEFITS OF STUDY....3
- D. SCOPE AND LIMITATIONS....3
- E. LITERATURE SURVEY....4
  - 1. Design Reference Mission....4
  - 2. Identification of Metrics....5
  - 3. Assessment of the Ship Design Characteristics Impacts on Mission Performance....6
  - 4. Generation of Alternatives and Analysis Methods....7
  - 5. Choosing Between Alternatives....8
- F. METHODOLOGY....9

II. DESIGN REFERENCE MISSION (DRM)....11
- A. INTRODUCTION....11
- B. BACKGROUND....11
- C. MISSION....12
- D. THREATS....12
- E. ENVIRONMENT....13
- F. OPERATIONAL SITUATIONS....14
  - 1. OPSIT 1: Anti-Submarine Warfare....14
  - 2. OPSIT 2: Anti-Aircraft Warfare....17
  - 3. OPSIT 3: Mine Warfare....19
  - 4. OPSIT 4: Surface Warfare....21

III. OPSITS SIMULATION SETUP....25
- A. OPSIT 1....25
  - 1. Detection Models....25
  - 2. Search of the Submarine....32
  - 3. PES – Submarine Interactions....32
  - 4. Submarine Attack to Merchant Ships....33
  - 5. Model Implementation....33
- B. OPSIT 2....37
  - 1. Calculation of the Probability of Damage to the Port for Individual Bombs....37
  - 2. Aircrafts and Air-Surface Missiles Detection....41
  - 3. Bomb Release Distance Estimation....42
  - 4. Probability of Kill and Probability of Survive....43
  - 5. Model Implementation....43
- C. OPSIT 3....47
  - 1. Mines Relevance....47
  - 2. Initial Assumptions....48

3. Detection Problem 49
4. Mine Effectiveness 50
5. Model Implementation 52
D. OPSIT 4 53
1. Detection of Surface Ships 53
2. RCS Estimation 54
3. Probability of Hit for Surface-Surface Missiles 55
4. Model Implementation 56

IV. EXPLORING THE DESIGN SPACE 61
A. DESIGN OF EXPERIMENTS (DOE) AND RESPONSE SURFACE MODELS (RSM) 61
B. SELECTION OF LEVELS FOR EACH FACTOR 62
C. ANALYSIS OPSIT 1 62
D. ANALYSIS OPSIT 2 66
E. ANALYSIS OPSIT 3 69
F. ANALYSIS OPSIT 4 71
G. CALCULATING THE OMOE 76
H. SIMULATION COMMENTS 77
1. Variability in the Data 77
2. Aspects to Improve in the ExtendSim® Models 79

V. RISK AND COST CONSIDERATIONS 81
A. RISK MANAGEMENT 81
1. Definition of Risk and Risk Management 81
2. Classification of Risks 81
3. Risk Management Process 81
4. PES Combat System Risks and Opportunities Discussion 83
5. Technical Risk Evaluation 87
B. INCORPORATING COST AND OTHER CONSTRAINTS AS MODEL RESPONSES 88

VI. CONCLUSIONS AND RECOMMENDATIONS 93
A. SUMMARY 93
B. CONCLUSIONS 93
C. RECOMMENDATIONS 94

APPENDIX A: CHARACTERIZATION OF SENSORS AND COMBAT SYSTEMS 95

APPENDIX B: SUMMARY OF EXPERIMENTS 105

LIST OF REFERENCES 129

INITIAL DISTRIBUTION LIST 133

LIST OF FIGURES

Figure 1. Area of Operations 13
Figure 2. OPSIT 1 Area of Operations 15
Figure 3. OPSIT 2 Area of Operations 17
Figure 4. OPSIT 3 Area of Operations 20
Figure 5. Some Common Detection Models. From [19]. 25
Figure 6. Hierarchy of Antisubmarine Warfare Models. From [21]. 27
Figure 7. Dependence of Target Strength on Aspect and Elevation Angle. From [23]. 29
Figure 8. Selected Search Method 32
Figure 9. Submarine Navigation Model 34
Figure 10. PES Navigation Model 34
Figure 11. Merchant Ships' Navigation Model 35
Figure 12. Merchant Engagement Model 35
Figure 13. Submarine-PES Engagement Model 36
Figure 14. Input Parameters for OPSIT No.1 37
Figure 15. Puerto Bolivar Coal Port (Target) 38
Figure 16. Dimensions of the Target 38
Figure 17. Probability of Damage as a Function of Distance to Piles 39
Figure 18. Uniform Probability for Bomb Distance to Piles 39
Figure 19. Bomb Reliability 40
Figure 20. Frequency Plot of Monte Carlo Simulation Output 40
Figure 21. Group 1 of Aircrafts Releasing ASMs 43
Figure 22. Anti-Aircraft Defense 44
Figure 23. Anti-ASM Defense with Missiles 45
Figure 24. Anti-ASM Defense with Guns 45
Figure 25. Wharf Defense 46
Figure 26. Input Parameters for OPSIT No. 2 47
Figure 27. Description of the Desired Placement of Mine Distribution 48
Figure 28. P_{ACT} Vs. Athwartship Distance. After [28]. 51
Figure 29. Mine 1 Branch 52
Figure 30. Mine 2 Branch 52
Figure 31. Mine 3 Branch 53
Figure 32. Radar Horizon. From [29] 54
Figure 33. OPSIT 4 Event-Tree 56
Figure 34. OPSIT 4 Detection, Tracking and Defense with SAMs 57
Figure 35. OPSIT 4 Point Defense Options 58
Figure 36. OPSIT 4 SSM Launch 58
Figure 37. OPSIT 4 Attack Output 59
Figure 38. Pareto Plot for the Screening Design Model 63
Figure 39. OPSIT 1: Prediction Profiler for MOE 64
Figure 40. An Example of Contour Profiler 66
Figure 41. OPSIT 2: Initial Screening Prediction Profiler 67

Figure 42. OPSIT 2: Pareto Plot for the Screening Design Model 67
Figure 43. OPSIT 2: RSM Prediction Profiler 68
Figure 44. OPSIT 2: A Contour Profiler for Trade-Off Between Number of SAM and SAM Range.....69
Figure 45. OPSIT 3: RSM Prediction Profiler 70
Figure 46. OPSIT 3: Pareto Plot for the RSM.....70
Figure 47. OPSIT 3: A Contour Profiler for Trade-Off Between Sonar Transmission Power and Frequency.....71
Figure 48. OPSIT 4: Initial Screening Prediction Profiler 72
Figure 49. OPSIT 4: Pareto Plot for the Screening Design Model 73
Figure 50. OPSIT 4: RSM Prediction Profiler 74
Figure 51. OPSIT 4: A Contour Profiler for Trade-Off Between Number of SSM and Number of SAM 75
Figure 52. Risk Management Process. From [35].....82
Figure 53. An Example of Increasing Complexity of Weapons Systems for Surface Combatants. From [40]. 85
Figure 54. Components Escalation for the FFG-7 Class. From [40]. 86
Figure 55. Using JMP® Simulator to Assess Technical Risk.....87
Figure 56. Example of the Determination of CDF for the MOE 88
Figure 57. CER for Sonar Cost 90
Figure 58. Contour Profiler for MOE and Cost of the Sonar System: Transmission Power vs. Diameter of the Array 91
Figure 59. Screening Model Statistics for OPSIT 1.....106
Figure 60. RSM Statistics for OPSIT 1.....109
Figure 61. Screening Model Statistics for OPSIT 1.....112
Figure 62. RSM Statistics for OPSIT 2.....116
Figure 63. RSM Statistics for OPSIT 3.....118
Figure 64. Screening Model Statistics for OPSIT 4.....121
Figure 65. RSM Statistics for OPSIT 4 (Summary).....126
Figure 66. RSM Statistics for OPSIT 4 (Parameter Estimates) 127

LIST OF TABLES

Table 1. Limiting Environmental Conditions 13
Table 2. Assumed Characteristics of Diesel-Electric AIP Submarine 16
Table 3. OPSIT 1 Mission Success Requirements 17
Table 4. Assumed Characteristics of Supersonic Aircraft 19
Table 5. OPSIT 2 Mission Success Requirements 19
Table 6. Assumed Characteristics of Mines 21
Table 7. OPSIT 3 Mission Success Requirements 21
Table 8. Assumed Characteristics of Landing Units 22
Table 9. Assumed Characteristics of Corvettes 23
Table 10. Assumed Characteristics of Frigates 23
Table 11. OPSIT 4 Mission Success Requirements 23
Table 12. Scenario Dependent Parameters 28
Table 13. Sensor System Dependent Parameters 29
Table 14. Directivity Index. From [22]. 30
Table 15. Attenuation Coefficients for Different Frequencies. From [19]. 31
Table 16. Monte Carlo Simulation Output 41
Table 17. Reference Parameters. From [18]. 42
Table 18. Zero-Drag Model for Weapon Trajectory 42
Table 19. Scenario Dependent Parameters 49
Table 20. Sensor System Dependent Parameters 49
Table 21. Probability of Hit of SSM. After [31]. 55
Table 22. DOE Matrix and Response for OPSIT 1 63
Table 23. Different Combat System Configurations with OMOE Calculated from Individual MOE Models 77
Table 24. Description of Selected Number of Replications per OPSIT and Example of the Resultant Variability in the MOEs. 78
Table 25. Statistics Describing the MOE for Selected Design Points in each OPSIT 78
Table 26. Representative Ship Class Displacements. From [38]. 84
Table 27. Generational Growth in U.K. Platform Size. From [39] 84
Table 28. Available Data for CER of Sonar Configurations. 89
Table 29. Selected Surface Combatants 95
Table 30. Radar Systems Parameters 101
Table 31. Sonar Systems Parameters 102
Table 32. SSM Parameters 102
Table 33. SAM Parameters 103
Table 34. Gun Parameters 103
Table 35. Torpedo Parameters 103
Table 36. Screening Design for OPSIT 1 105
Table 37. Screening Responses for OPSIT 1 105
Table 38. RSM Design for OPSIT 1 107
Table 39. RSM Responses for OPSIT 1 108
Table 40. Screening Design for OPSIT 2 110

Table 41. Screening Responses for OPSIT 2 111
Table 42. RSM Design for OPSIT 2 113
Table 43. RSM Responses for OPSIT 2 114
Table 44. RSM Design and Responses for OPSIT 3 117
Table 45. Screening Design for OPSIT 4 119
Table 46. Screening Responses for OPSIT 4 120
Table 47. RSM Design for OPSIT 4 122
Table 48. RSM Responses for OPSIT 4 124

LIST OF ACRONYMS AND ABBREVIATIONS

ASM	Air-Surface Missile
C3	Command, Control, Communications
CBA	Cost Based Analysis
CER	Cost Estimating Relationship
CIWS	Close In Weapon System
CNR	Carrier-to-Noise Ratio
COTECMAR	Science and Technology Corporation for Naval, Maritime and Riverine Industries" (acronym in Spanish)
DOE	Design of Experiments
DRM	Design Reference Mission
ECM	Electronic Countermeasures
ESM	Electronic Support Measures
IFF	Identification Friend or Foe
KPP	Key Performance Parameters
LST	Landing Ship Tank
MOE	Measure of Effectiveness
MOP	Measure of Performance
NM	Nautical Miles
OMOE	Overall Measure of Effectiveness
OPSIT	Operational Situation
OPV	Offshore Patrol Vessel
PES	Surface Strategic Platform (from Spanish)
P_D	Damage Probability

PHit	Hit Probability
P_{Kill}	Kill Probability
RSM	Response Surface Model
SAM	Surface-Air Missile
SAS	Statistical analysis Software
SSM	Surface-Surface Missile
UAV	Unmanned Air Vehicle
UJTL	Universal Joint Task List
UNTL	Universal Naval Task List
USV	Unmanned Surface Vehicle
UUV	Unmanned Underwater Vehicle

ACKNOWLEDGMENTS

First, I want to thank the Colombian Navy and the Science and Technology Corporation for Naval, Maritime and Riverine Industries, for the opportunity to improve my academic knowledge in this excellent academic institution.

I want to express my infinite gratitude to my research advisors, Dr. Clifford Whitcomb and Dr. Fotis Papoulias, for their guidance and encouragement during the development of the thesis and through my entire program of study. The successful end of this work would not have been possible without their support and tutoring.

Very special thanks to Ms. Dawn Dewaele, as well to Professor Mary Vizzini, for their wonderful assistance with editing the thesis.

Finally, to my parents and brothers for their motivation. To my beloved wife, Erika; my son, Juan Diego; and daughter, Valentina, thank you for your love, patience, and support during my tour at NPS.

THIS PAGE INTENTIONALLY LEFT BLANK

I. INTRODUCTION

A. BACKGROUND OF STUDY

The Colombian Navy is developing preliminary studies for a new type of surface combatant ship, which it plans to build between the years 2019 and 2024. These new ships will replace the existing four 1500-ton "Almirante Padilla" light-frigates class built by the German Howaldtswerke (HDW) shipyard in the 1980s. This is the first attempt by Colombia to build its own middle tonnage combatant ship, and the Science and Technology Corporation for Naval, Maritime and Riverine Industries (COTECMAR is the acronym in Spanish) is building them.

The name of the project is "Surface Strategic Platform" (PES is the acronym in Spanish). The project has a phase of planning, research, and the identification of requirements, which runs from 2007 to 2012. A design phase will follow and will run until 2018. Finally, the detail design and ship building phase will run until 2024.

Retired Admiral Edgar Romero and Captain Jorge Carreño set the objectives of the project and have led COTECMAR's preliminary studies [1]. The present work contributes to the following objectives of the project, which have been translated from the original in Spanish:

- Design for appropriate characteristics of time, space, environment and scenario in which it will operate.
- Determine and implement the requirements of the design and construction of the ship based on the determination of the characteristics of the sea, atmosphere, and scenario under which the ship will operate, through oceanographic, meteorological, and physical studies and through development of models and simulations.
- Develop and implement procedures and tools for assessment and decision making.

- Develop the capability and means to use analysis tools, models, simulations and software, analysis effectiveness / cost and risk, for design, construction, project execution, and lifecycle.
- Perform research and analysis of cost estimates for design, construction, project execution, and lifecycle to identify opportunities and several factors, such as standards and specifications and to apply cost-effectiveness and risks analysis.

Since the project deals with combat system design for a warship, it is worth pointing out that the classical definition of a warship, as stated by [2], divides it into two main components: the combat systems and the platform. That is:

"WARSHIP = COMBAT SYSTEM + PLATFORM" [2].

Likewise, the combat system is defined as "The warship system of C3, Sensor and Weapon sub-systems and personnel which has been designed and integrated to provide the necessary warship fighting capabilities to enable its Command to meet specified mission and warfare objectives" [2].

B. PURPOSE OF STUDY

The purpose of this thesis is to develop a framework for the Colombian Navy to follow for the conceptual design of the PES combat system, using computer modeling to explore the design space, and achieve the highest possible mission effectiveness within the normal constraints of ship design (weight allocation, electrical power, volume and cost).

This thesis provides a synopsis of the concepts used during the design exploration process; then, it develops a Design Reference Mission (DRM) and Operational Situations (OPSITs) as the basis of the design. Furthermore, this study documents the development of the simulation models and assumptions made during the process. In addition, it uses statistical methods to study the effect of the design variables on the combat system effectiveness, and it briefly explores the risk associated with combat systems design for

surface combatants and ways to manage the risks, as well as techniques to incorporate cost estimation within the concept exploration phase. Finally, it states the findings, conclusions, and recommendations.

C. BENEFITS OF STUDY

The separation of the combat system design from the platform simplifies the problem of surface combatant ship design. Once the combat system with the highest overall effectiveness is selected, the payloads are identified and the platform is designed around both the combat system's needs and other top level requirements.

Simulating the operational situations provides the means to assess the overall effectiveness of the different combat systems configurations, while the use of statistical techniques allows identification of the design variables with greater influence on effectiveness, providing the ability to improve the response of the combat system against different assumed threats.

D. SCOPE AND LIMITATIONS

The scope of this thesis is the combat system design space of a surface combatant with a displacement between 1500 to 3500 tons. However, the focus is on the ship as a single unit; therefore, interactions with other friendly forces and the use of unmanned vehicles have not been considered in the development of the computer models. This simplifies the development of the models.

The remainder of Chapter I develops a literature review of the methodologies and techniques used in the thesis. Chapter II presents the Design Reference Mission (DRM) and Operational Situations (OPSITs) development in an imaginary scenario that includes mine warfare, air defense, surface warfare, and submarine warfare, and it identifies the measures of effectiveness (MOE) for each particular situation. Chapter III illustrates the simulation models' development with the assumptions made during the process. Chapter IV focuses on the design space exploration, aided by statistical techniques to increase the efficiency of selecting the optimum combination of sensors and weapons with competing objectives. Chapter V presents the cost estimation and risk considerations for the design

of the PES combat system. Finally, Chapter VI presents the conclusion, recommendations, and identifies areas for further research.

E. LITERATURE SURVEY

The purpose of this part of the study is to identify the methods, tools, and definitions that have been successfully used in previous work to develop complex systems with competing technological characteristics, and design warship and combat systems. The focus is as follows:

- Define the requirements using a Design Reference Mission (DRM)
- Identification of requirements and metrics
- Assessment of the ship design characteristics and their impact on mission performance.
- Generation of alternatives and analysis methods
- Determination of appropriate alternatives

1. Design Reference Mission

The first step in the concept development process, as identified by [3], is to fully define the requirements of the desired system. For interoperable systems that will be part of a system-of-systems, [4] recognizes the DRM as a common framework to be used for the comparison of analytical results from different system alternatives. This framework is also used as a baseline for subsequent systems engineering activities, like the generation of requirements, refinement of problem definition, development of concepts, and test and evaluation. The DRM is thought by [5] as a "simulated model environment to let system functions and physical concept alternatives perform." [5] states that "creating a DRM begins with understanding the context," which encompasses including a goal, a deployment of systems, a physical environment in which the operational activity takes place, the specific projected threat, and whatever changes the environment will undergo as the scenario progresses. The following steps are identified by [5] in the development process of a DRM:

1. Stakeholder statement of operational needs.
2. Projected operational environment.
3. Operational Situations (OPSIT).
4. Mission definition.
5. Mission execution.
6. Mission success requirements.

A definition of the content of those steps can be found in [3-6]. OPSITs require further explanation. They are particular instances of situations that could take place within the DRM. As [4] describes them, OPSITs provide single test points that collectively sample the problem space. Moreover, the design of OPSITs should stress selected system design attributes and support functional and performance trade-off analysis.

The U.S. Navy uses the following two main publications as a framework for mission definition, execution, and determination of success requirements: the Universal Joint Task List (UJTL) [7] and the Navy Tactical Task List (NTTL) [8]. These publications provide hierarchical lists of capabilities of different levels, as well as metrics to assess them.

2. Identification of Metrics

To select the metrics to evaluate mission accomplishment, [9] designed specific tactical situations that put emphasis on the ship design characteristics that were under consideration. Measures of Performance (MOP) are metrics related to the tasks necessary for a particular mission and are derived from [7] and [8]. A similar approach was identified by [10], who describes in more detail the U.S. Navy concept design process, where "the requirements are developed based on Design Reference Mission (DRMs), which is in the 'Problem Space.'"

Although [7] and [8] will be used as references when developing the OPSITs, metrics will be tailored to the particular strategic scenario. On the other hand, the determination of the threats characteristics will be done without focusing on any

particular country or actual possible adversary. It will instead be based on technological trends, given the unclassified nature of this thesis.

Also, for the purpose of consistency, the following metrics have been adapted after [11]:

a. Factors or variables are parameter designs over which the designer has control, like radar antenna diameter, transmission power, or number of missiles.

b. Measures of Performance (MOPs) are the different success criteria considered in each OPSIT.

c. Measures of Effectiveness (MOEs) are measures of the operational performance of the system, calculated as a function of the corresponding MOPs.

d. Overall Measure of Effectiveness (OMOE) is the result of the multi-criteria analysis that combines the different MOEs.

3. Assessment of the Ship Design Characteristics Impacts on Mission Performance

For the assessment of the ship design characteristic impacts on mission performance, [9] uses a simulation tool tied to a Design of Experiments (DOE) procedure. The simulation tool is the Naval Battle Engagement Model (NABEM), a Monte Carlo based discrete event simulation model that is capable of simulating tactical environments with air-to-air, air-to-surface, surface-to-air, and surface-to-surface engagements. The DOE procedure is used, from the statistical point of view, to maximize the data from simulations. In this work, a central composite design was used to vary the design variables. With SAS's JMP® software, a Response Surface Model (RSM) is generated to explore the design space. While focused on the individual mission's effect on the change of input variables, this procedure can be expanded to cover the overall effectiveness of the system, weighting, in some way, the different sample missions considered. As identified by [3], RSM is a structured process that uses second order curve fits of desired data to generate a minimum collection of designs based on groups of

factors that permit the study of an entire design space. RSM also allows graphical representation of the design space for designers and stakeholders, which facilitates concept exploration and trade-off analysis.

4. Generation of Alternatives and Analysis Methods

As [12] points out, different concepts should be analyzed when designing a new system. This approach reduces the risk and increases the likelihood of achieving a product that is better than previous systems available in the market. Furthermore, [13] recommends developing architectural alternatives that are significantly different in their approach to meeting stakeholder requirements. An Architecture, as defined by [14], is "the selection of the types of system elements, their characteristics, and their arrangement." Moreover, [14] identifies the following criteria for every alternative architecture:

- Satisfies the requirements and external interfaces.
- Implements the functional architecture.
- Is acceptably close to the true optimum within the constraints of time, budget, available knowledge and skills, and other resources.
- Is consistent with the technical maturity and acceptable risks of available elements.
- Is extensible, i.e., accommodates system growth and introduction of new technologies.
- Provides the base of information that will allow subsequent steps of system definition and implementation to proceed. The system architecture and operational concept, element descriptions, and internal interfaces are all adequately defined.
- Is robust, i.e., allows subsequent, more detailed system definition to proceed with minimum backtracking as additional information is uncovered.

5. Choosing Between Alternatives

A methodology is presented in [15] that allows forecasting of the system level impact of technological infusion in ship design. This methodology studies the impact of the different parameter, called a k-parameter, which, with respect to a baseline design, can be adjusted with the infusion of new technologies. Mathematical synthesis models are developed to assess the relative impact of every k-parameter in the Overall Measure of Effectiveness (OMOE). Those simulations are used to identify the k-factor with stronger influence in the OMOE. With those k-parameters, a number of experiments with different combinations of those parameters are performed. The number of experiments is a function of the number of k-factors selected. From there, a Response Surface Method is implemented to generate, from an infinite number of designs, a broader number of possible combinations of k-factor. The graphic representation allows the designers find the entire design space and enables decision makers to assess the impact of known technology for the allocation of resources in an optimum way for R&D.

A similar procedure is followed in [16] with the notional design of a Conventional Submarine with Advanced Air Independent Propulsion System, though it has a greater focus on the iterations necessary to achieve a good design. Moreover, in this reference, a mission simulation context is developed in detail to measure the technological impact on the OMOE.

From the literature survey, one can conclude that great effort has been devoted to both optimize the effectiveness of the design of complex systems like defense related ones, and save resources, which are always scarce. Although there are many alternatives for structuring the design process, based on the survey, the following steps are identified as a means to accomplish the objectives of the present study:

1. Development of the Design Reference Mission and associated OPSITs
2. Modeling of OPSITs in ExtendSim®
3. Technological Survey of trends in Naval Combat Systems
4. Create DOE with JMP® software
5. Perform discrete event simulation in ExtendSim®

6. Create and explore design space through RSM using JPM®
7. Consider cost and risk considerations
8. Conclusions

F. METHODOLOGY

This research employs the following methodology. First, develop a fictitious DRM with a representative set of OPSITs and challenging threats. Second, develop models for each OPSIT with discrete event simulation software ExtendSim®, and document the assumptions made. Third, design the experiments using statistical techniques to improve the amount of information captured from the models. Fourth, run the experiments. Fifth, analyze the design space with the SAS JMP® software. Finally, incorporate cost and risk considerations in the study of the combat system design space.

THIS PAGE INTENTIONALLY LEFT BLANK

II. DESIGN REFERENCE MISSION (DRM)

A. INTRODUCTION

This DRM is to be used as a tool to aid in the systems engineering requirements' definition process for the PES project, "its primary objective is to characterize the threat and operating environment that will serve as the baseline to support systems engineering activities" [4].

This document describes the background, DRM methodology, missions, threats, environments, specifications, and specific Operational Situations (OPSITs) related to the PES class ship development process.

As discussed earlier, the terrain, operational concept, and threats characteristics used in the development of this DRM are not related to any actual intelligence data, given the unclassified nature of this work. Rather, the approach taken is to develop stressing scenarios based on consideration of expected state-of-the-art threats.

The phrase "intelligence information" in this thesis refers only to the situation designed to support the DRM development process and assumptions in order to build the operational environment and does not refer to real intelligence.

B. BACKGROUND

Colombia faces a hostile strategic environment where its commercial activities have been affected by the military actions of Red country. After months of escalating political tension between the two countries, Red country has deployed its military forces. Naval ships and submarines from Red deny Colombian merchant ships the normal use of maritime routes, and it is necessary for Colombia to recover control of the sea. After years of buying military equipment from developed countries, Red has a military advantage in aviation, with several state-of-the-art aircrafts, but its naval surface forces could be comparable to Colombian forces.

Military actions have been confined to the maritime and aerial space, but it is expected that Red will try to invade some areas of Colombia as part of its military strategy. Naval mining operations are also an objective of the enemy as part of their strategy to gain the control of the sea.

C. MISSION

The PES platform, as a part of the task force, will conduct naval operations with the purpose of recovering control of Colombian sea, and gaining naval superiority over the Red forces.

D. THREATS

Probable threats for the PES include a multitude of sources in the air, surface, or sub-surface domains. Red forces intend to destroy port infrastructure, naval and military facilities, and the Colombian naval, air and land forces. Specific threats include the following:

Air Domain:

- Military State-of-the-Art Aircraft
- Armed UAVs
- Cruise missiles

Surface Domain:

- Surface Ships ranging from missile armed patrol boats to frigates
- Armed USVs

Sub-surface Domain:

- Conventional Submarines
- Armed UUVs
- Torpedoes

However, given the variability of the threat, it will be defined specifically in the context of each particular OPSIT.

E. ENVIRONMENT

The PES will have to operate in different environments during its life cycle. Moreover, the Colombian maritime territory includes two very different general scenarios, the Pacific Ocean and Atlantic Ocean. However, given the recognized extreme characteristics of the latter for combat system efficiency, the Caribbean Sea, shown in Figure 1, will be the general geographic scenario where the OPSITs will take place.

The sea wave conditions for this scenario are given by [17]. Those and other maritime conditions are listed in Table 1 and are used for OPSIT environment characterization:

Table 1. Limiting Environmental Conditions

Max Wave High	7 m
Average Wave High	1.5 m
99.5% Confident Interval upper limit	3.6 m
Predominant Direction of the Wave (Coming From)	NE
Max Water Temperature	30 $°C$ (86 $°F$)
Min Water Temperature	22 $°C$ (71.6 $°F$)
Wind Speed	2 – 15 m/s
Water Depth	1,000 fathoms (average)
Ambient Temperature Range	24 - 34 $°C$ (75.2 – 93.2 $°F$)

Figure 1. Area of Operations

The following four OPSITs will be generated and addressed within this DRM:

1. OPSIT 1: Anti-submarine warfare.
2. OPSIT 2: Anti-aircraft warfare
3. OPSIT 3: Mine-warfare.
4. OPSIT 4: Surface warfare

F. OPERATIONAL SITUATIONS

1. OPSIT 1: Anti-Submarine Warfare

The PES class ship has been detached to the area of Santa Marta Bay in response to a reported Red submarine in the area. The submarine was first seen from a cargo vessel arriving in the port, and its presence has been confirmed by air-wing operations. Its presence is preventing cargo vessels loaded with Colombian coal from leaving the port, causing a serious economic impact on the nation.

From intelligence reports, it is believed with 95% confidence that the submarine is within an area of 80 NM x 80 NM outside the bay, as illustrated in Figure 2. The PES shall conduct a search for the submarine in that area to prevent submarine attacks against cargo vessels. When detected, the submarine shall be sunk and humanitarian search and rescue should be provided to the survivors. Once the PES ship arrives in the area, cargo ships will depart following an exponential distribution with a mean of two hours between ships.

Given the lack of naval resources and the numerous vessels waiting for departure, each with different maritime routes, no escort operations will be conducted. Rather, the search for the submarine within the designated area will be developed to neutralize the threat.

While conducting this operation, PES speed will be limited to the required sensors speed to avoid sensor degradation and increase the probability of detection.

Figure 2. OPSIT 1 Area of Operations

Maritime Conditions

- Sea State: 3
- Water Temperature: 24 $°C$ (75.2 $°F$)
- Ocean Depth: 300 fathoms

Logistics

- Able to sustain at-sea operations for 30 days

Time Required to Complete Mission

- TBD or until Red submarine has been neutralized

Specific Mission

- Protect cargo vessels in the area
- Neutralize submarine threat

Threat

- Primary – Red diesel-electric submarine
- Secondary – N/A

Assumed Threat General Conditions

The threat is a Diesel-electric patrol submarine with Air Independent Propulsion (AIP), which reduces the probability of detection on the surface. The general characteristics are as follows:

Table 2. Assumed Characteristics of Diesel-Electric AIP Submarine

Displacement:	1,400 Ton (Surfaced); 1,830 Ton (submerged)
Length:	56 m
Beam:	7 m
Draft:	6 m
Sonars:	Low and medium frequency passive sonar system. Range: for surface ships 8 NM, for Merchant ships 12 NM.
Torpedo tubes:	6
Torpedoes:	12 [6m length; 0.533m diameter; Max Speed 35 kt; warhead 260 kg, Range 28 km at 35 kt; 12 km at 35 kt; Fuse: magnetic proximity and impact]
Countermeasures:	Yes
Shafts:	1
Speed:	12 kt (surfaced) 20 kt (submerged)
Range:	8,000 NM at 8 kt (surfaced); 420 NM at 8 kt (submerged)
Autonomy:	>30 days, 15 days on AIP

Mission Success Requirements

The following metrics have been selected as decisive for determining the success of the mission attempted through the present OPSIT.

Table 3. OPSIT 1 Mission Success Requirements

M1	Percent	Of cargo vessels surviving
M2	Probability	Of neutralizing threat
M3	Probability	Of PES survival

2. OPSIT 2: Anti-Aircraft Warfare

The PES ship is patrolling in Puerto Bolivar, a Coal Port located in the north of Colombia, as presented in Figure 3. The objective is to protect the maritime port, which, according to intelligence information, is going to be destroyed by Red aircraft.

The protection of this infrastructure is critical for Colombian economic interests, since coal commerce represents an important piece of GDP.

One week earlier, an aircraft attack destroyed a long-range radar designed to provide sea and air coverage of the north portion of Colombia. As a result, the only available sensors in the area are the PES sensors.

The probable vector of attack ranges from 350° to 090° and, according to intelligence reports, could be accomplished by 2 to 4 aircraft.

The PES shall conduct a permanent search with its sensors and repel any attack. Its primary mission is to ensure the survival of the maritime infrastructure.

Figure 3. OPSIT 2 Area of Operations

Maritime Conditions

- Sea State: 3
- Water Temperature: 24 $°C$ (75.2 $°F$)
- Ocean Depth: 200 fathoms

Logistics

- Able to sustain at-sea operations for 30 days

Time Required to Complete Mission

- TBD

Specific Mission

- Protect maritime infrastructure
- Neutralize air-threat

Threat

- Primary – Red Aircraft and ASMs.
- Secondary – N/A

Assumed Threat General Conditions

The threat is a highly-maneuverable supersonic aircraft that can be used against ground and naval surface targets. The general characteristics and specific armament configuration, according to intelligence information, are as follows:

Table 4. Assumed Characteristics of Supersonic Aircraft

Maximum Speed	Mach 2.2
Range	2,000 km (1,079.9 NM)
Ceiling	18,000 m (59,055 ft)
Radar Cross Section	0.02 m^2 [18]
Armament	1 gun cal. 30 mm Configuration 1 6 ASMs Configuration 2 10 Guided bombs 500 kg Drop Speed Range [500 – 1,900 km/h]
ASMs Characteristics	Range 285 km Warhead 320 kg Sensor active radar seeker Speed Mach 0.88 Wingspan 130 cm length 5.7m diameter 38cm Launching speed range [0.5 – 0.9 Ma] Launching altitude [200 – 11,000 m]
AAMs Characteristics	Range 130 km Warhead 39 kg Sensor semi-active radar homing Speed mach 4 Wingspan 77 cm (large 4 m), diameter 23cm
Contra measures	ESM / Decoys
Onboard Sensors	Radar 6 kW (peak) 1.5 average

Mission Success Requirements

Table 5. OPSIT 2 Mission Success Requirements

M1	Percent	Of maritime infrastructure damaged
M2	Percent	Probability of survival of ship
M3	Number	Of enemy aircraft destroyed

3. OPSIT 3: Mine Warfare

The PES ship has the mission of transporting important components for an aerial defense system in San Andres Island. However, the enemy has installed a mined zone in the channel of access to the southwest port[1] as seen in Figure 4, which prevents normal

[1] This is a fictitious port made with the intention of assessing the capabilities related with the OPSIT.

navigation. No option other than breaking the mine zone is available. The ship has a trained team and the equipment to safely remove mines if they are detected.

Figure 4. OPSIT 3 Area of Operations

Maritime Conditions

- Sea State: 3
- Water Temperature: 26 $°C$ (78.8 $°F$)
- Ocean Depth: 100 fathoms

Logistics

- Able to sustain at-sea operations for 30 days

Time Required to Complete Mission

- TBD

Specific Mission

- Cross mined zone
- Transport vital components for Island Aerial Defense

Threat

- Primary – Enemy naval mines

Assumed Threat General Conditions

Table 6. Assumed Characteristics of Mines

Type	Moored mine
Warhead	2000 lbs
Length	128 in
Diameter	29 in
Deep Range	Up to 600 ft
Detection	Magnetic & Acoustic
Frontal density of minefield	20 mines/NM

Mission Success Requirements

Table 7. OPSIT 3 Mission Success Requirements

M1	Percent	Probability of survival

4. OPSIT 4: Surface Warfare

The PES ship has been ordered to stop the advance of a landing force of Red that is aiming to land on the Colombian coast. In a previous air-air confrontation, both forces' aerial capabilities were lost. Thus, the landing force is composed of only two landing units, one frigate, and one corvette.

The main targets for the PES ship are the landing units. Sinking them will prevent the Red military from accomplishing its objectives. Thus, in this context, the mission to neutralize the landing force takes priority over the survivability of the PES ship.

Before any detection takes place, the initial position of the Red landing force is 300 NM relative to PES ship, which is navigating with a course perpendicular to the landing force course, and with the same speed (22 kt).

Maritime Conditions

- Sea State: 3
- Water Temperature: 24 $°C$ (75.2 $°F$)
- Ocean Depth: 1,000 fathoms

Logistics

- Able to sustain at-sea operations for 30 days

Time Required to Complete Mission

- TBD or until Red landing force is neutralized

Specific Mission

- Stop landing force advance

Threat

- Primary – SSMs from Red landing force
- Secondary – Parabolic Projectiles from Red landing force

Assumed Threat General Conditions

Table 8. Assumed Characteristics of Landing Units

Length, m	100
Width, m	18
Range, NM	9,000
Vessel speed, knots	17.5
Armament	2x Automated gun, caliber 30 mm. 8 SAM
Displacement	1,600 Ton

Table 9. Assumed Characteristics of Corvettes

Length, m	80
Width, m	11
Antenna high, m	20
Range, NM	4,000
Vessel speed, knots	27
Armament	1 gun 76/62 1 gun double 20/25mm 8 SAM 8 SSM (Exocet MM40 block 3 Range 180 Km Diameter 34.8 cm)
Displacement	1,500 Ton
Sensors	Radar 2D ESM IFF
Contrameasures	2 chaff launchers

Table 10. Assumed Characteristics of Frigates

Length, m	104
Width, m	13
Antenna high, m	24
Range, NM	3,500
Vessel speed, knots	30
Armament	1 gun 76/62 1 gun double 35mm 8 SAM 8 SSM (Exocet MM40 block 3 Range 180 Km)
Displacement	2,400 Ton
Sensors	Radar 3D 4 MW (Peak power) - Operational frequency 3 GHz IFF
Contrameasures	2 chaff launchers

<u>Mission Success Requirements</u>

Table 11. OPSIT 4 Mission Success Requirements

M1	Number	Of Red landing units killed
M2	Number	Of Red Surface Combatants killed
M3	Number	Of missile hits received

THIS PAGE INTENTIONALLY LEFT BLANK

III. OPSITS SIMULATION SETUP

The purpose of this chapter is to document the processes for developing the OPSIT simulation models, beginning with the study of the physical, probabilistic, or mathematical models that describe the different phenomenon that take place in each OPSIT.

A. OPSIT 1

1. Detection Models

The detection of a submarine by a surface ship, as well as the detection of the surface ship by the submarine, depends on many physical and sensor dependent variables. In many analytical or computational studies, the effect of those variables is simplified with the use of easier-to-handle models. Some of them are shown in Figure 5. The easiest to implement is the cookie-cutter model. This model is used to represent the enemy detection capability, with the assumption that the detection distance is not modified by changes in the combat system parameters of PES ship. This model assumes the probability of detection is one inside a specified range and zero outside that range, as shown in Equation 1.

$$P_D = \begin{cases} 1, range \le R \\ 0, otherwise \end{cases} \quad (1)$$

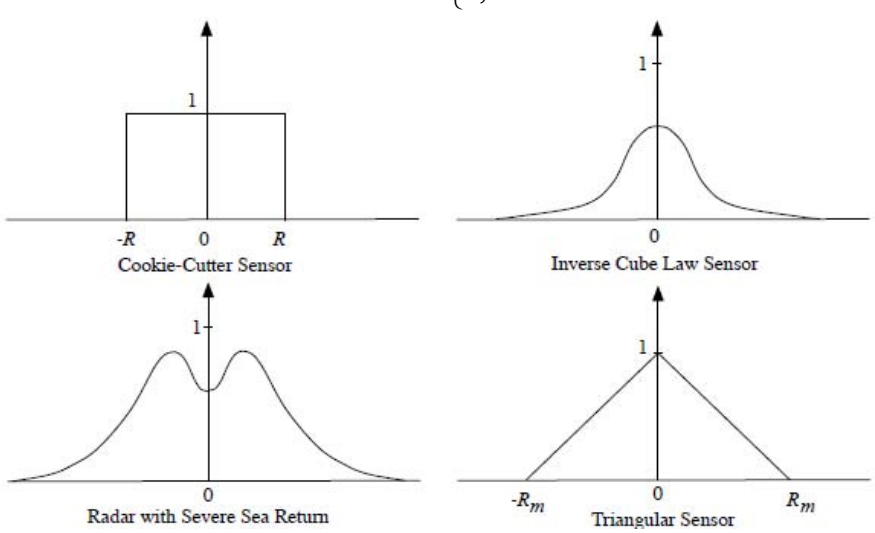

Figure 5. Some Common Detection Models. From [19].

Another approach to the detection problem is the use of acoustic propagation models, like the passive and active sonar equations.

Passive acoustic sonar is the submarine's primary detection method. The passive sonar equation is an algorithmic equation, with all terms in decibels (dB) and is shown in Equation 2.

$$SE = SL - TL - (NL - DI) - DT \quad (2)$$

All terms in the passive sonar equation are described below:

SL: Source level is the amount of sound energy radiated by the target, when measured at the target. It is a characteristic of the target and its current operational conditions (speed, relative course, running machinery, etc.)

TL: Transmission losses are the amount of sound energy reduced while the sound waves travel from the source to the sensor. It depends mainly on the distance between source and sensor and frequency, since the attenuation coefficient varies highly with frequency, being higher (i.e., higher transmission losses) at increasing frequencies.

NL: Self-noise is the omni-directional sonar noise measured at the receiver, including ocean noise, flow noise over the sonar dome, and ship noise transmitted to the sensor through the hull or water.

DI: Directivity index is the amount of noise that the receiver is able to cut out.

DT: Detection threshold is the signal-to-noise ratio required to detect the target for a selected probability of detection and probability of false alarm, specified by the operator or the system designer.

SE: Signal excess is the difference between the provided carrier-to-noise ratio (CNR) and the CNR required for detection.

The active mode sonar system, in conjunction with the passive mode, is the means the surface ship uses to detect a submarine threat. Most of the terms of the active sonar formula have already been defined for the passive equation. The difference is that the

transmission losses occur in two paths: from the sensor to the target and on the way back. The source level in this context is the sound produced by the sensor, rather than by the target.

However, active sonar performance varies depending on the presence and importance of the reverberation phenomenon, which is noise produced by reflection of the sound waves from the bottom, the sea surface, and suspended matter in the water, as described by [20]. The active sonar equation is presented in Equations 3 and 4, after [21], in its two variations:

$$SE = SL - 2TL + TS - (NL - DI) - DT \qquad \text{(Noise limited)} \qquad (3)$$

$$SE = SL - 2TL + TS - (RL) - DT \qquad \text{(Reverberation limited)} \qquad (4)$$

The first new term in those formulas is the target strength (TS), which is a measure of the sound reflected by a target. TS is a function of the target material, size and shape; the second is the reverberation level (RL), which has two kinds of contributions: volumetric and surface. Volumetric reverberation is produced by bubbles, fish, and other marine life in the ensonified volume. Surface reverberation is produced by scattering from irregularities of the surface.

The hierarchy of antisubmarine warfare models developed by [21] and presented in Figure 6, is used as guidance for selection of simulation models for this OPSIT.

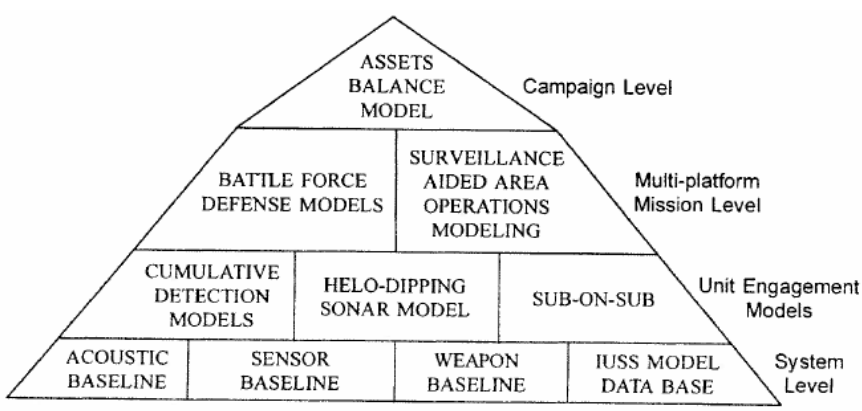

Figure 6. Hierarchy of Antisubmarine Warfare Models. From [21].

In the development of this OPSIT, the cookie-cutter detection model will be used to simplify the detection of surface combatant ships and merchant ships by the submarine. For the submarine detection by the surface combatant, on the other hand, acoustic detection models are necessary to capture the difference between different combat system's performance when dealing with a constant threat.

Based on the above description of terms in the acoustic models, the following factors are critical to determine the detection range, and depend on the selected scenario and threat:

Table 12. Scenario Dependent Parameters

Factor	Value	Source
Salinity (parts per thousand)	36	Figure 6.3 & 6.4 [22]
Temperature ($°C$)	27	OPSIT 1
Depth of sensor (m)	5	Assumed platform characteristic
Speed of sound (m/s)	1,581.1	Eq. 6.22 [22]
Bottom losses (dB)	16	Average value based on Figures 6.17 & 6.18 [22]
Noise level (NL) (dB)	60	Figure 7.5 [19]

The target strength is a threat dependent parameter, but it also varies with the aspect of the target relative to the sensor, as well as with the angle between the horizontal plane of the sensor and the horizontal plane of the submarine, as presented in Figure 7, from experimental measurements by [23].

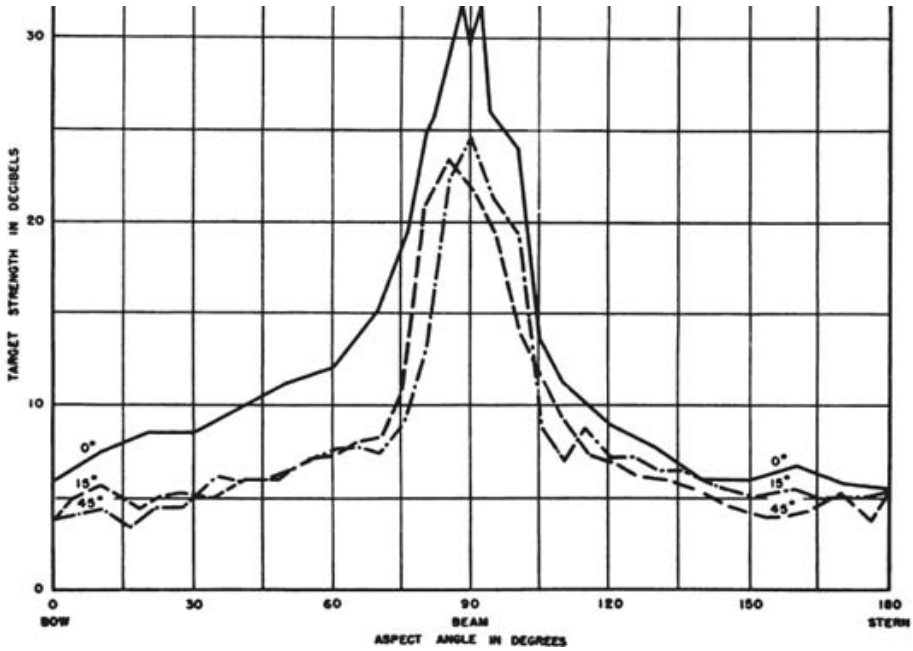

Figure 7. Dependence of Target Strength on Aspect and Elevation Angle. From [23].

Since the characterization of a particular threat is outside the scope of this thesis, the TS characteristics of a known submarine that closely matches with the length and beam of the one described in OPSIT 1 will be used, from [23]. Hence, a peak value of 25 dB for beam aspect at $0°$ elevation angle and a lowest value of 6 dB for bow or stern aspect will be used.

Table 13. Sensor System Dependent Parameters

Factor	Value	Source
Attenuation Coefficient (dB)	Implemented in look-up table in the model (frequency dependent)	Table 18
Scattering losses (dB)	$1.04*(Sea\ State)*\sqrt{f(kHz)}$	Eq. 6.73 [22] (Frequency dependent)
SL	$171+10\log(P*E_{ff})+DI$	[20]
TL (dB)	$20\log R+\alpha(0.001R)$	Eq 11.30 [20] (Frequency dependent)
DI	Depends on the Array type and number of elements.	Table 15

The following factors should be input for every configuration of sensors:

- Frequency, 1 to 100 kHz [20]
- Array Type (linear, rectangular, circular, cylindrical)
- Height of array (for rectangular or cylindrical)
- Diameter of array (for circular or cylindrical)
- Length of array (linear or rectangular)
- Integration time, in seconds
- Power, in watts
- Power conversion efficiency

Table 14. Directivity Index. From [22].

	Directivity Index	
Array Shape	At or Above Design Frequency	Below Design Frequency
Linear	$10 \log n = 10 \log (2L/\lambda_0)$	$10 \log (2L/\lambda)$
Rectangular	$10 \log mn = 10 \log (4LH/\lambda_0^2)$	$10 \log (4LH/\lambda^2)$
Circular	$20 \log n = 20 \log (1.77D/\lambda_0)$	$20 \log (1.77D/\lambda)$
Cylindrical (baffled)	$3 + 10 \log mn = 10 \log (11HD/\lambda_0^2)$	$10 \log (11HD/\lambda^2)$
L = array length;	H = array height;	D = array diameter;
λ = wavelength;	$f_0 = c/\lambda_0$ = design frequency;	$\lambda_0/2$ = element spacing

In the cylindrical array m is equal to 1/3 of the number of elements around the array diameter.

Table 15. Attenuation Coefficients for Different Frequencies. From [19].

13.00 Fall, 1999 Acoustics: Table of attentuation coefficients

frequency [Hz]	alpha [dB/km]	frequency [Hz]	alpha [dB/km]
1	0.003	50000	15.9
10	0.003	60000	19.8
100	0.004	70000	23.2
200	0.007	80000	26.2
300	0.012	90000	28.9
400	0.018	100000 (100 kHz)	31.2
500	0.026	200000	47.4
600	0.033	300000	63.1
700	0.041	400000	83.1
800	0.048	500000	108
900	0.056	600000	139
1000 (1kHz)	0.063	700000	174
2000	0.12	800000	216
3000	0.18	900000	264
4000	0.26	1000000 (1 MHz)	315
5000	0.35	2000000	1140
6000	0.46	3000000	2520
7000	0.59	4000000	4440
8000	0.73	5000000	6920
9000	0.90	6000000	9940
10000 (10 kHz)	1.08	7000000	13520
20000	3.78	8000000	17640
30000	7.55	9000000	22320
40000	11.8	10000000 (10 MHz)	27540

From equation 11.31 and curve 11-24 in [20], a probability of detection $P_D = 0.9$ and a probability of false alarm $P_F = 10^{-4}$ were selected. With those assumptions, a parameter d is obtained from the curve, with a value d = 14 dB. This parameter is used to calculate the detection threshold (DT), as follows:

$$DT = 10 * \log\left(\frac{10^{d/10}}{2T}\right)$$, where T corresponds to the integration Time. (5)

This integration time is recommended to be 10–15 cycles; thus, this parameter is frequency dependent.

Once the characteristics of the sensor are selected, the DT should be higher than the CNR for the detection to take place.

2. Search of the Submarine

Although several types of search plans can be developed for this operational situation, the objective of the present study is not to assess the effectiveness of such methods. Rather, a specific search pattern would be selected to assess the different combat system configurations in fulfilling the mission. The selected method is a crossover patrol as described by Figure 8, beginning the search from the upper left corner of the search area.

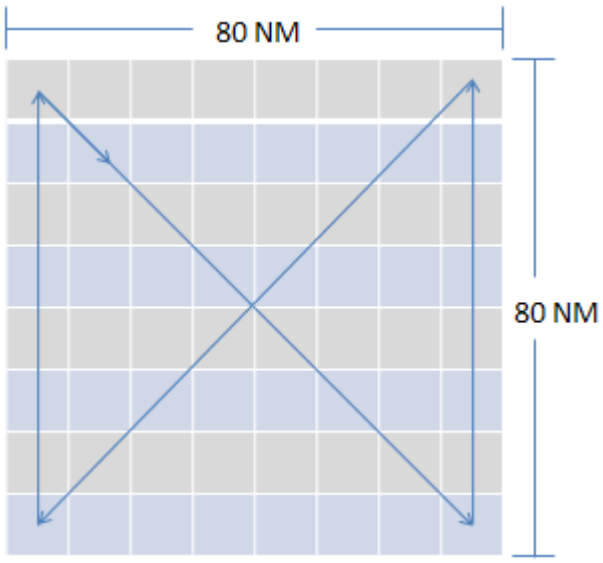

Figure 8. Selected Search Method

The behavior of the submarine, on the other hand, is assumed to be random in its course once it reaches one of the limits of the navigation area, and in straight lines between the limits.

3. PES – Submarine Interactions

The behavior of the submarine and PES are difficult to model since they include not only the physical characteristics of the systems, but also the tactics and decisions taken by the humans in the loop. Since that topic is outside the research of this work, a set of assumptions are made to define the behavior of both the submarine and the ship.

It is assumed that the interaction between the submarine and PES will begin after one detects the other. Furthermore, once each platform has released torpedoes against its opponent, it is assumed they set maximum speed in the opposite direction of the threat position to get out of the range of the attacking torpedoes. The success of the attack for each torpedo is then a function of the maximum speed of the opponent, distance when fired, torpedo battery life, and torpedo speed.

It is also assumed that there is a higher hit probability P_{Hit} for the submarine launched torpedo than for the surface ship launched torpedo, based on the larger volumetric search that the latter has to perform in order to detect and track its target.

4. Submarine Attack to Merchant Ships

Given the limited amount of torpedoes available, it is assumed the submarine will attack a merchant ship only if the kinematic analysis of the target and energy storage of the torpedo allows it to reach the target. Otherwise, the submarine would let the merchant ship pass and would wait until the next contact. For each torpedo launch, the chance of hitting the merchant ship would be defined by a probability input to the model that takes into account the reliability of the weapon.

5. Model Implementation

The branch of the model represented in Figure 9 simulates the submarine displacement within its patrol area. Random numbers with uniform distributions are used to generate the initial position and initial course.

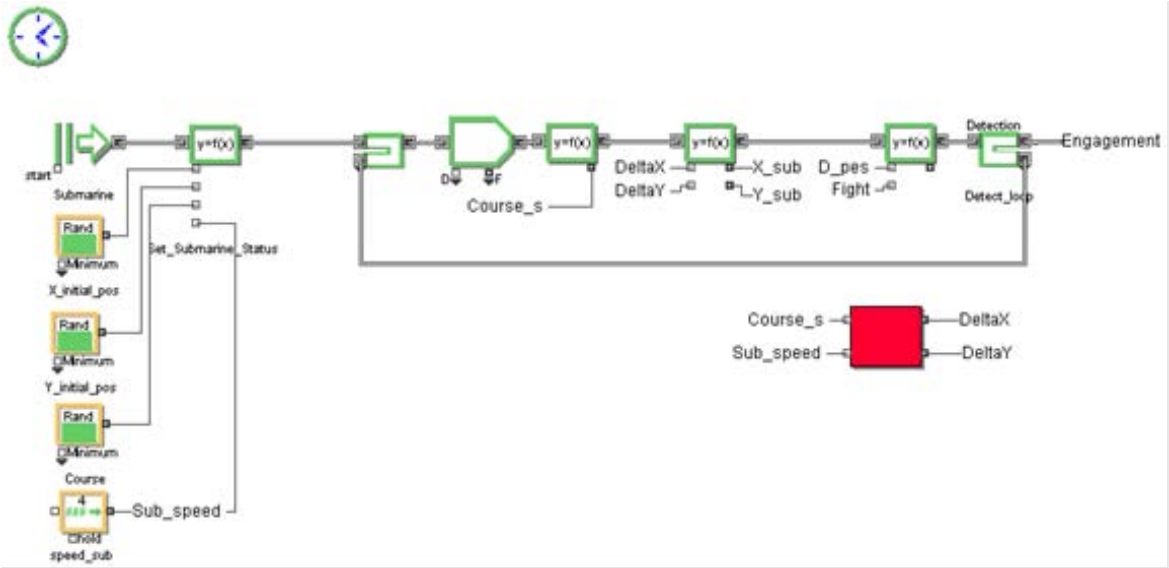

Figure 9. Submarine Navigation Model

Since the PES ship follows a predetermined patrol search method, its path was implemented through a look-up table. It will follow that path until it detects a submarine. This depends on the sensor characteristics, the environment, and the submarine parameters. Its navigation simulation is represented in Figure 10. In this model, the distance between submarine and PES ship is constantly measured and fed to the detection assessment.

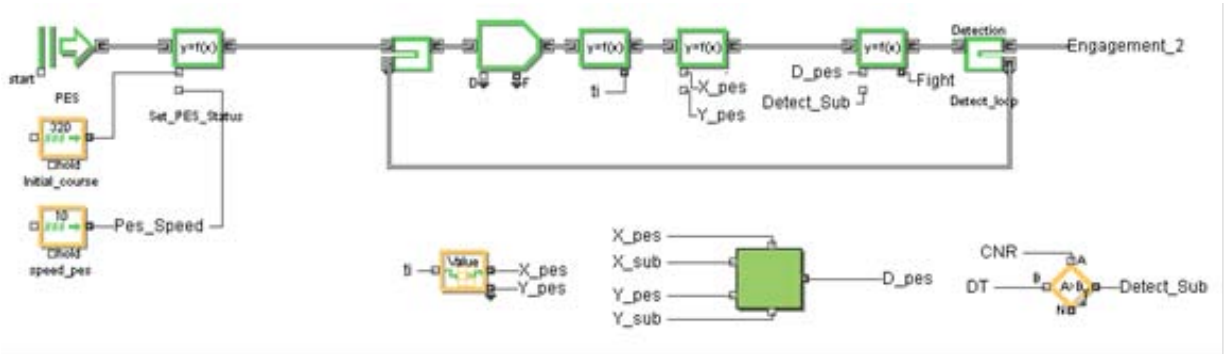

Figure 10. PES Navigation Model

Figure 11 represents the branch of the model that simulates the merchant ships' transit through the area. Twelve merchant ships are created with exponential distribution between arrivals with a mean of 60 minutes. All merchants use the same entrance point that corresponds to the exit of the bay channel and follow a course that is random and uniformly distributed between 315° and 045°. If the merchant is detected by the submarine, and it is within the Red submarine's range, a torpedo is launched from the submarine against the merchant.

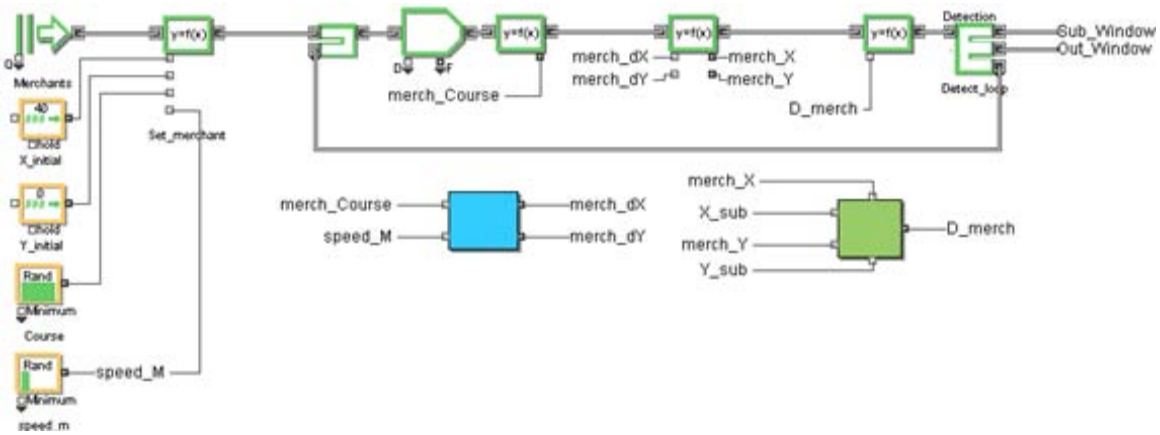

Figure 11. Merchant Ships' Navigation Model

Figure 12 represents the interaction between the submarine and merchant ships. The outcome of the interaction, if the torpedo is fired, is defined by probabilities that are input to the model.

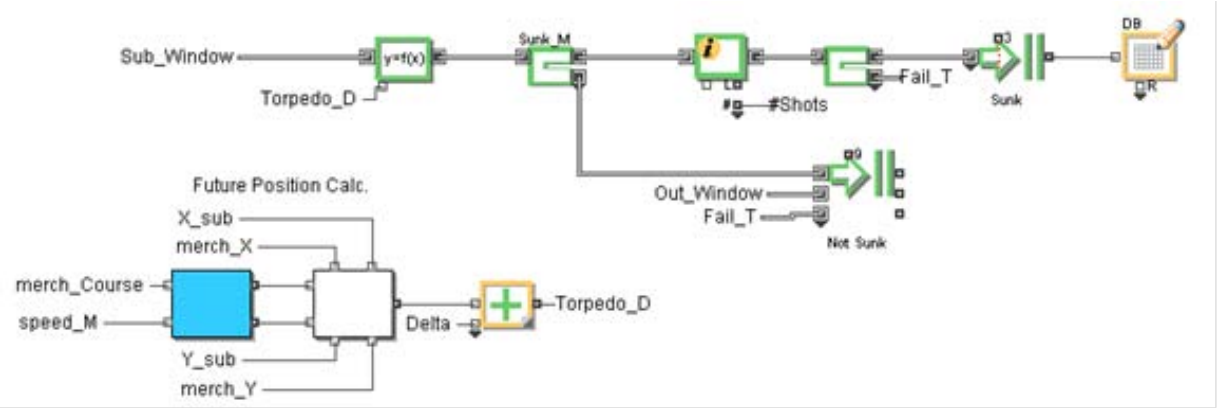

Figure 12. Merchant Engagement Model

The PES-submarine engagement is modeled by the branches shown in Figure 13. The distance at the interaction time, probability of a hit of torpedoes, number of torpedoes, platforms' speed, and torpedoes operational characteristics define the engagement. In the case of the submarine, it also depends on how many attacks it has carried out against merchants, since every attack reduces the number of torpedoes available at the moment of the engagement. In all those engagements, the probability of kill, given a hit, is assumed as one (i.e., P(Kill|Hit)=1.)

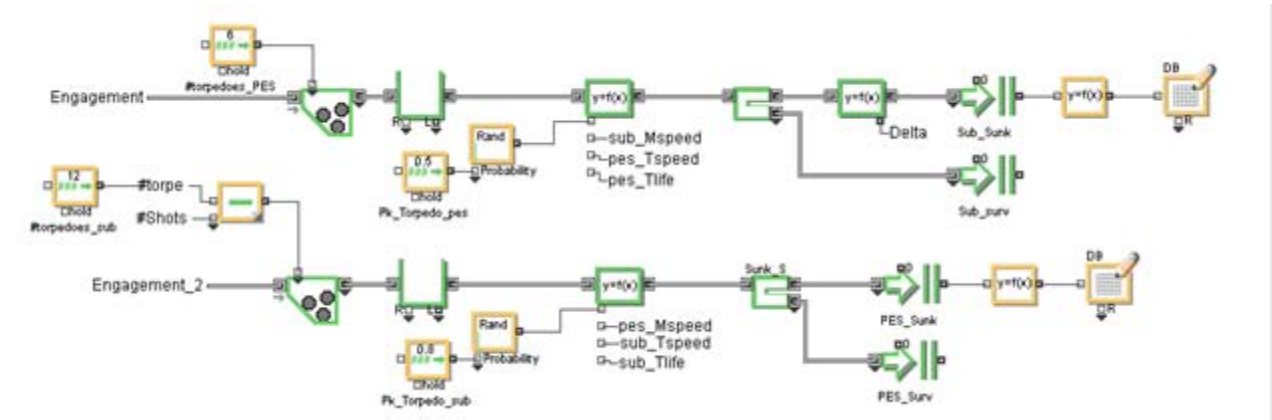

Figure 13. Submarine-PES Engagement Model

Figure 14 presents the interface developed for the input parameters. In this window, the user can easily modify the parameters used for the simulation.

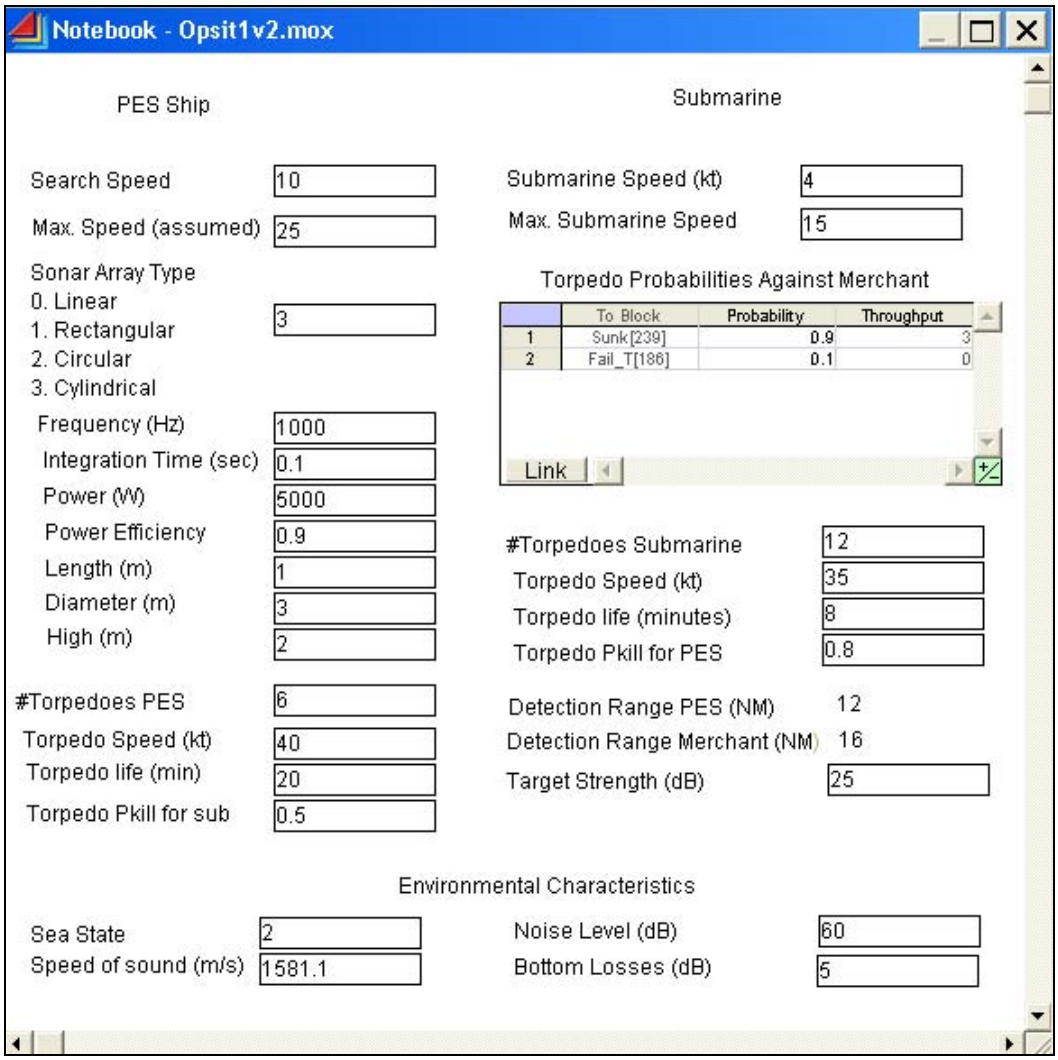

Figure 14. Input Parameters for OPSIT No.1

B. OPSIT 2

1. Calculation of the Probability of Damage to the Port for Individual Bombs

The use of guided bombs for such a large target allows an assumption that the probability of a hit (P_{Hit}) is one. This structure can be considered as a bridge; therefore, the amount of damage depends primarily on the distance of the bomb to the piles of the port. If the bomb lands in the middle of two piles, the probability of damage is the

highest, and it decreases to the lowest value when the bomb lands over the pile itself. This situation is described in Figure 17, without consideration of the reliability of the bomb.

Figure 15. Puerto Bolivar Coal Port (Target)

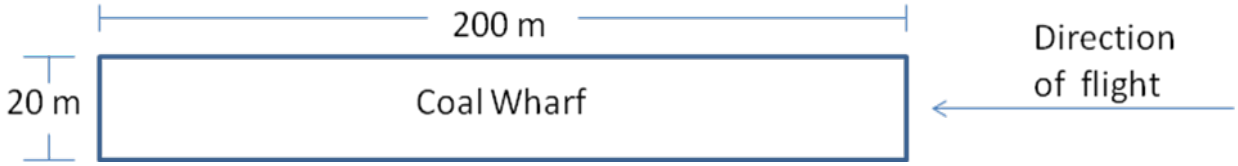

Figure 16. Dimensions of the Target

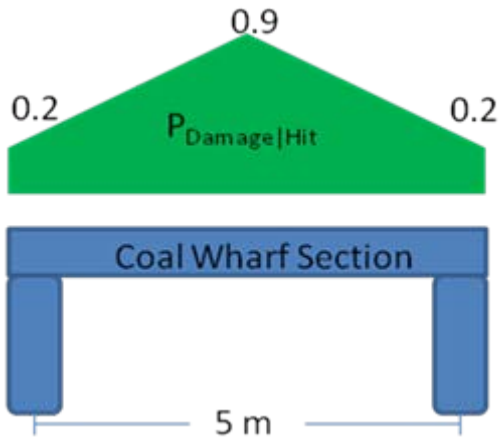

Figure 17. Probability of Damage as a Function of Distance to Piles

Since the attacking aircraft pilot cannot determine the location of piles, the probability of hitting any particular location of the span between piles is described by a uniform probability, as shown by Figure 18.

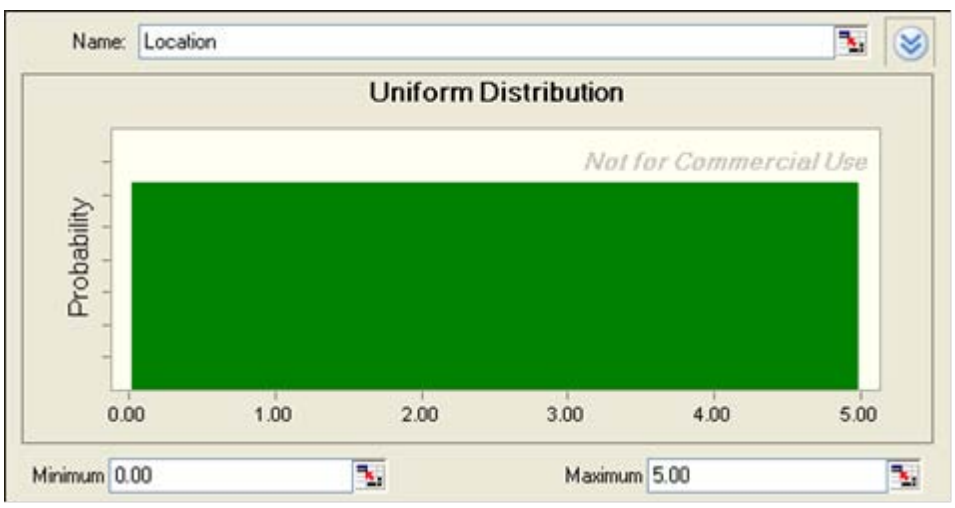

Figure 18. Uniform Probability for Bomb Distance to Piles

The assumed Reliability of the bomb is 95% (i.e., 95% of the bombs will detonate when they hit the target), as described by Figure 19.

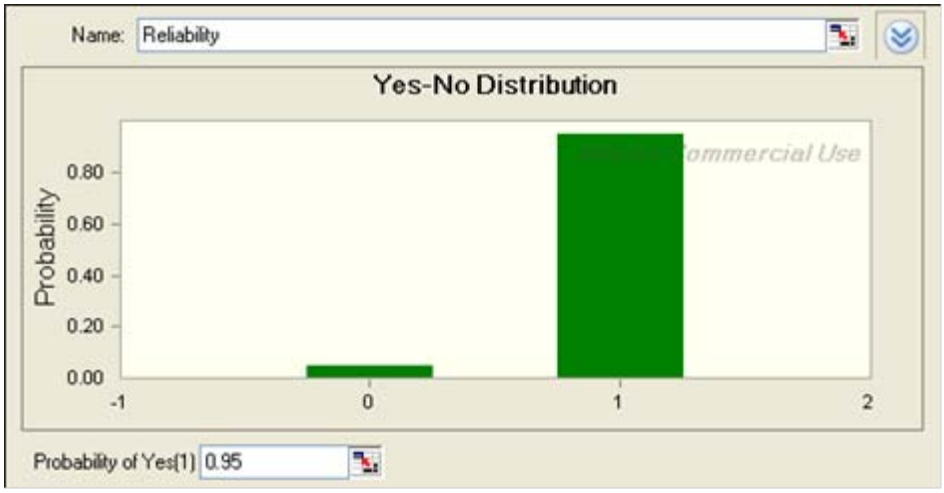

Figure 19. Bomb Reliability

The situation of a single bomb dropped on the wharf was studied using a Monte Carlo simulation implemented with the software Cristal Ball®. With 100.000 replications, the model obtained a mean P(Damage|Hit) of 0.52, which will be the assigned probability of damage used in the model for individual bombs.

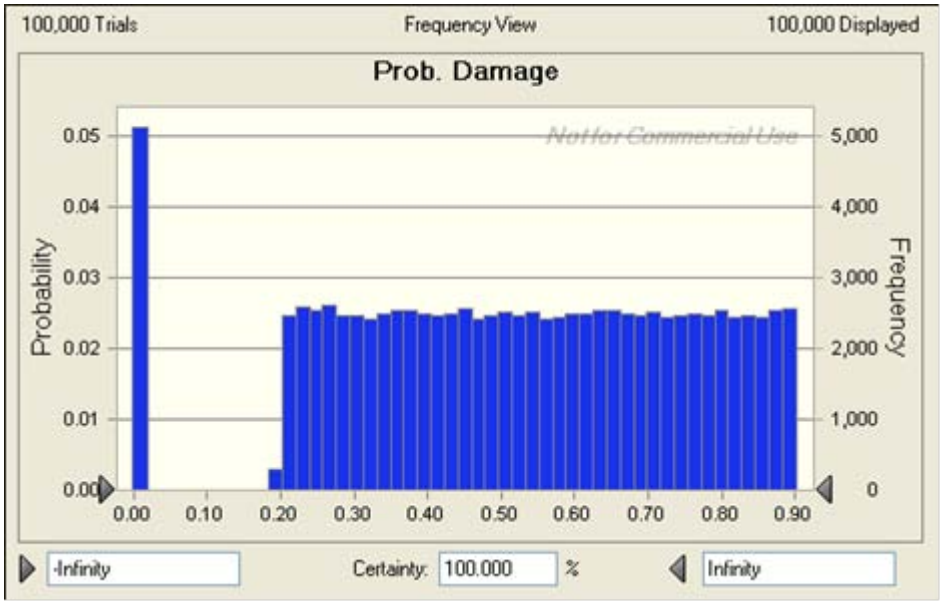

Figure 20. Frequency Plot of Monte Carlo Simulation Output

Table 16. Monte Carlo Simulation Output

Forecast: Prob. Damage	
Statistic	Forecast values
Trials	100,000
Mean	0.52
Median	0.53
Mode	0
Standard Deviation	0.23
Variance	0.05
Skewness	-0.306
Kurtosis	2.37
Coeff. of Variability	0.441
Minimum	0
Maximum	0.9
Mean Std. Error	0

2. Aircrafts and Air-Surface Missiles Detection

Using both the Radar Equation (Equation 6) and common parameters used for air defense design, as identified in the 4th column of Table 14 from [18], the CNR can be calculated for a given range, while neglecting transmission, reception, and atmospheric losses.

$$CNR = \frac{P}{kTBF} = \frac{\pi P_T L_T L_R D^4 \sigma}{64 kTBF \lambda^2} \frac{e^{-2\alpha}}{R^4} \quad (6)$$

Based on those assumptions, the detection range of the target is calculated in the ExtendSim® model for each of the specific sensor parameters.

Table 17. Reference Parameters. From [18].

PARAMETER	BALLISTIC MISSILE DEFENSE RADAR	ANTI-SHIP MISSILE SEEKER	AIR DEFENSE/ CRUISE MISSILE DEFENSE RADAR I	AIR DEFENSE/ CRUISE MISSILE DEFENSE RADAR II
CNR = Carrier-to-Noise Ratio (Required to give desired detection performance)	14 dB	23 dB	33 dB	23 dB (2 pulses integrated)
P_D = Detection Probability	0.9	0.9	0.99	0.99
P_F = False Alarm Probability	10^{-6}	10^{-6}	10^{-6}	10^{-6}
P_{AV} = Average Transmitter Power	10,000 W	10 W	1000 W	1000 W
D = Aperture Diameter	16 m	20 cm	4 m	4 m
σ = Target Cross Section	0.01 m²	10,000 m²	0.02 m²	0.02 m²
Cross Section Statistics	Swerling 0	Swerling 2	Swerling 2	Swerling 2
α = Atmospheric Attenuation (Often neglected)	0	0	0	0
T = Electronics Temperature	300 K	300 K	300 K	300 K
PRF = Pulse Repetition Frequency	150 Hz	5 kHz	1 kHz	2 kHz
F = Amplifier Noise Factor (Typically 3 to 10)	10	10	10	10
λ = Radar Wavelength	5 cm	2 cm	6 cm	6 cm
f = Radar Frequency	6 GHz	15 GHz	5 GHz	5 GHz
R = Radar Range (Predicted)	950 km	26 km	30 km	53 km

3. Bomb Release Distance Estimation

Given the range of speed and altitude for the weapons, a flight altitude of 5000 m and aircraft speed of Mach 0.6 (192 m/s), with a zero dive angle and a common ejection velocity of 2 m/s has been assumed to characterize the aircraft attacking the coal wharf.

Based on the aforementioned inputs, a zero-drag model was developed in Excel and is shown in Table 18. The conclusion is that the aircraft should release bombs 6092.4 m ahead of the target in order to succeed in their attack. That is also the limiting distance in which the aircraft should be destroyed, in order to avoid their release of bombs.

Table 18. Zero-Drag Model for Weapon Trajectory

TRAJECTORY FOR ZERO-DRAG MODEL					
INPUTS			OUTPUTS		
Initial height (m)	5000.00		TOF (sec)	31.72	
Aircraft speed (kt)	373		Horizontal velocity at impact (m/s)	192.04	
Dive Angle (degrees)	0.00		Vertical velocity at impact (m/s)	313.22	
Ejection velocity (m/s)	2.00		Impact velocity (m/s)	367.40	
Initial horizontal velocity (m/s)	192.04		Impact angle (rad/deg)	1.02	58.49
Initial vertical velocityvelocity (m/s)	2.00		Ground range (m)	6092.41	
Gravity (m/s^2)	9.81		Slant Range (m)	7881.46	

4. Probability of Kill and Probability of Survive

The probability of kill is characteristic of the interaction between each particular target and weapon. Estimations about those characteristics will be input to the model for each combat system configuration. In the case of gun shots against incoming missiles, the probability of kill in Equation 7 is a function of the single shot probability and the number of shots:

$$P_K = 1 - (1 - P_{K_Single})^n \quad (7)$$

In Equation 8, the probability of survival, or survivability, is defined as one minus the kill probability:

$$P_S = 1 - P_K \quad (8)$$

5. Model Implementation

The attacking aircraft force is divided into two groups of two aircraft each. Group 1 will attack the PES ship, while Group 2 will attack the maritime port. Figure 21 represents the release of missiles from Group 1. Here it is assumed that, given the long range of the weapon, the aircrafts' tactics will consist of releasing the missiles at their maximum range to avoid detection. A time between launches of 1.5 seconds is assumed for each aircraft.

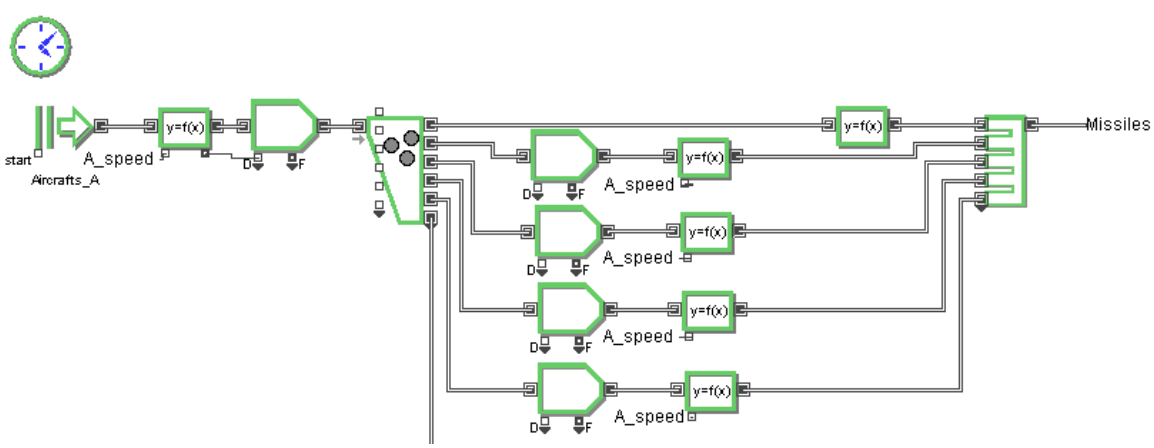

Figure 21. Group 1 of Aircrafts Releasing ASMs

At the end of the missiles' release, the aircraft will be at their closest distance to the ship. If they are detected, one missile will be fired against each one. The aircraft, which were flying at weapon release speed range, increase to their maximum speed (Mach 2). The branch in Figure 22 represents the chances of aircraft detection, and the chances of missile hits.

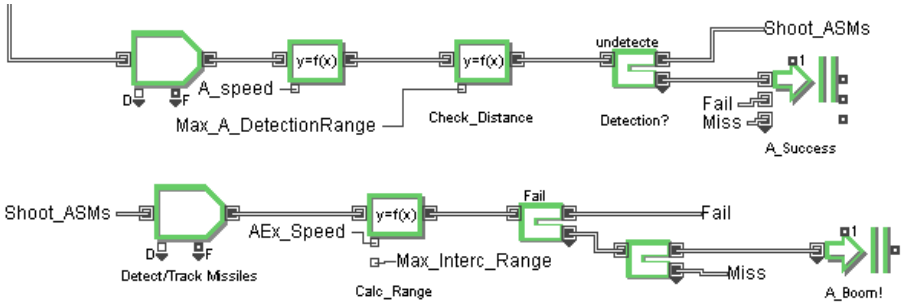

Figure 22. Anti-Aircraft Defense

The branch in Figure 23 models the defense of the ship against incoming Air-to-Surface Missiles (ASM). Based on the kinematics of incoming missiles and interceptors, as well as detection range and specified weapon characteristics, the SAM missiles are fired until they reach 50% of the total. Detection delays are treated with probabilistic distributions inside the activity blocks.

The reason for saving 50% of the missiles is that a second group of aircraft are going to attack the coal wharf, and the defense of that wharf constitutes the mission of the PES ship.

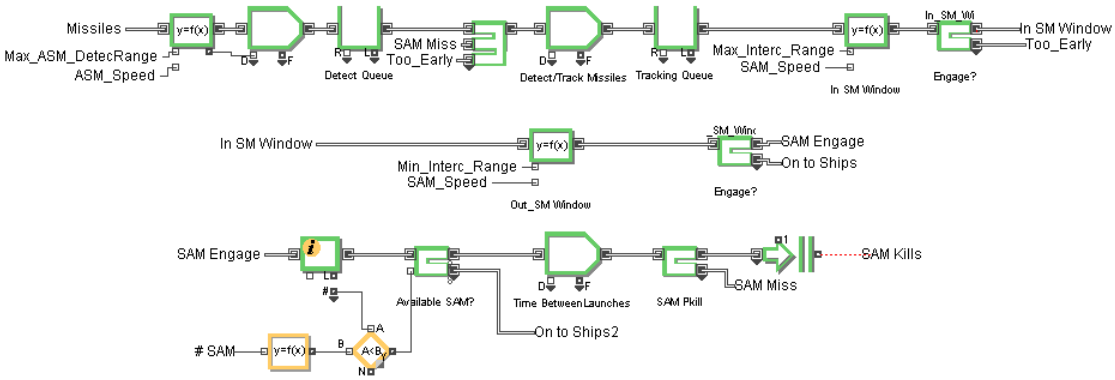

Figure 23. Anti-ASM Defense with Missiles

Once all of the SAMs are shot, the remaining leakers will be fired upon with guns. A branch of the model in Figure 24 represents that interaction. The probability of kill for the gun interaction is calculated from the maximum and minimum range of a particular gun system, as well as the projectile speed, rate of fire, and single probability of kill of a single projectile. If the gun fails to hit the missile or if it is busy with another missile, the missile is characterized with a probability of hit on the ship itself.

Since the survivability characteristics of the platform is not within the problem scope, the probability of kill given a hit ($P_{K/H}$) is assumed to be one.

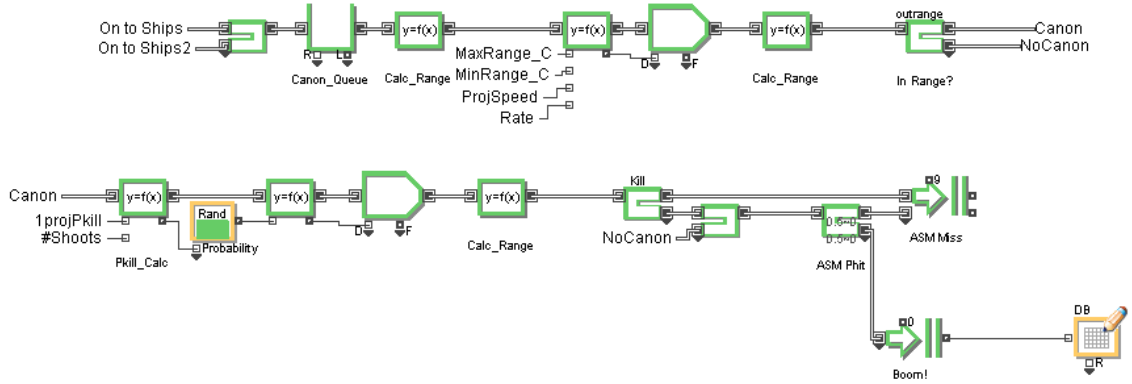

Figure 24. Anti-ASM Defense with Guns

Figure 25 is the branch of the model that recreates the interaction between the PES ship and the aircraft attacking the wharf. Section 3 defines the release distance for a particular flight condition. Based on that, if the aircraft are detected far enough away and destroyed before reaching the release distance, the wharf is safe. There are two other courses of action represented in this model, which are based on the sensor and weapon characteristics of the PES ship:

-The PES ship does not detect the aircraft

-The aircraft are detected after the bombs are released

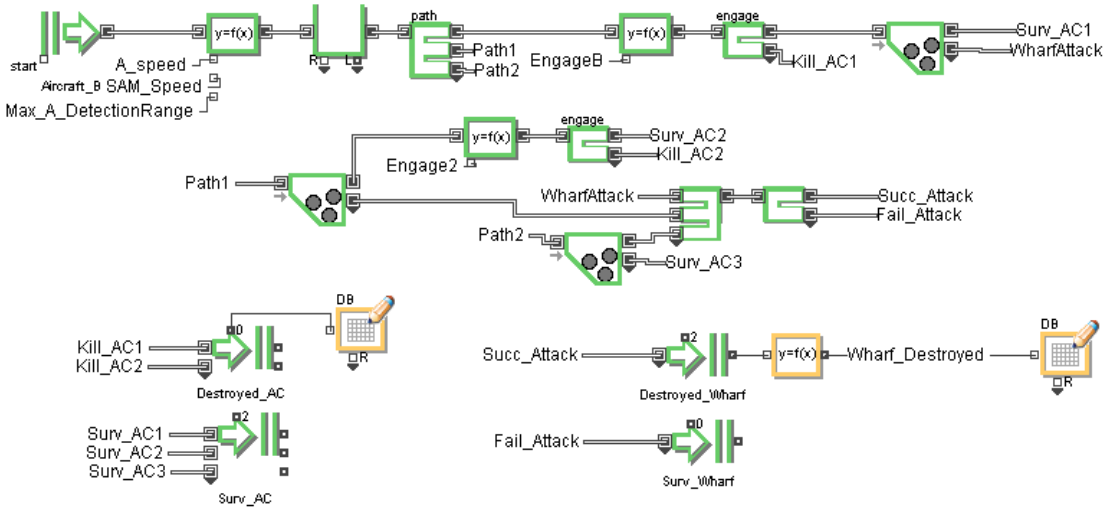

Figure 25. Wharf Defense

Figure 26 represents the input data necessary for the model. The threat data will be fixed, while the rest of the parameters will depend on the selected Combat System characteristics.

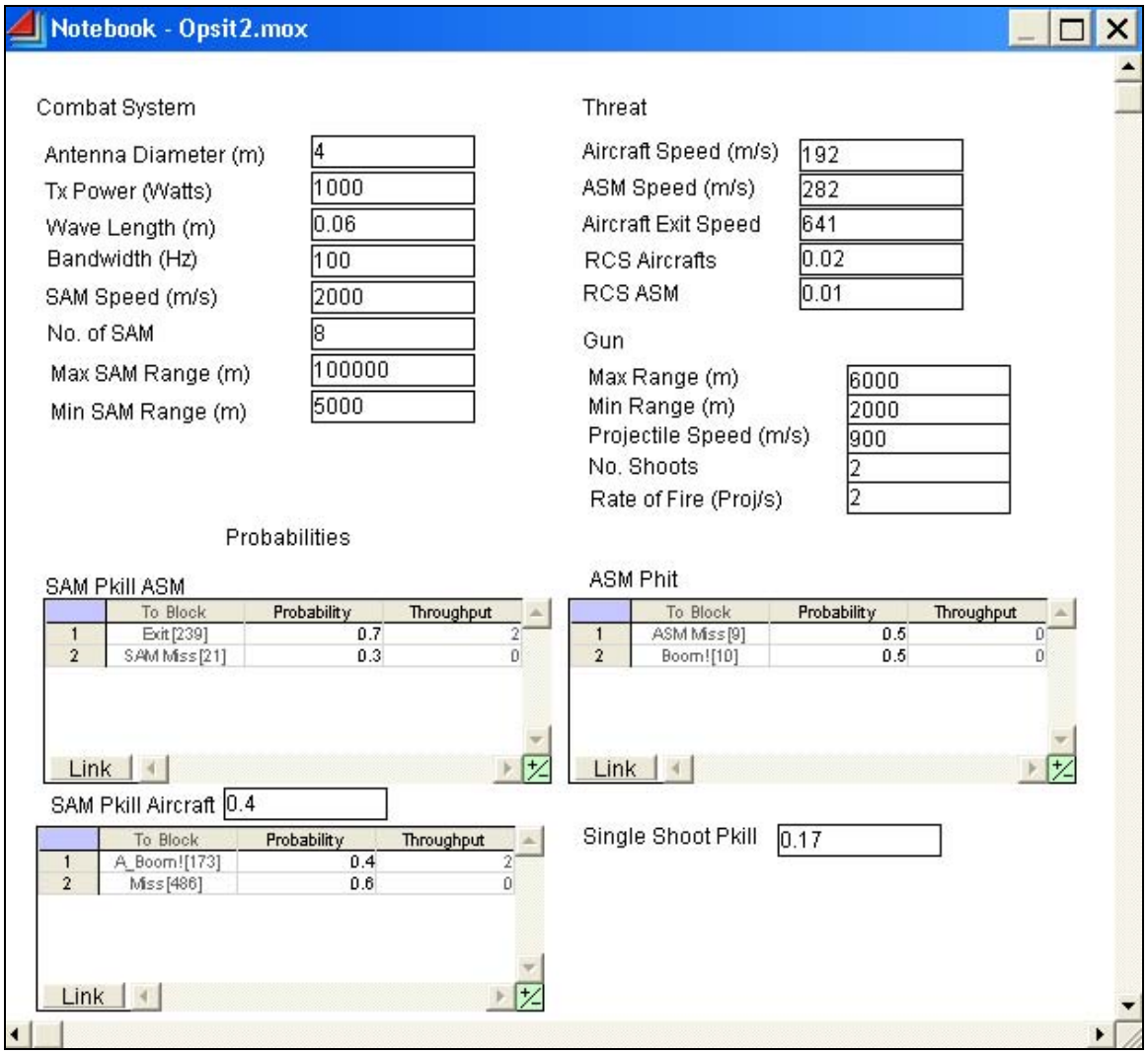

Figure 26. Input Parameters for OPSIT No. 2

C. OPSIT 3

1. Mines Relevance

A discussion of the use of mines is very relevant to the development of this DRM, because if used properly, they can be extremely effective and used at a relatively low cost by the antagonist. As demonstrated by naval history, even navies with modest budgets can acquire and use mines, thereby delaying naval operations and forcing the allocation of resources to minesweeping. Recent examples of successful mine utilization include two U.S. Navy ships damaged by mines in the Iraq invasion [24], and one more damaged during in the Iran-Iraq war [25]. Also 5 U.S. ships were sunk and 6 were damaged in the

Korean War [26]. Actually 46 countries have mine capabilities, with 28 countries producing mines and 14 confirmed as mine exporters [27].

Therefore, it is still an important aspect of naval warfare and should be considered when designing a naval ship. Capital ships cannot rely on external assets for mine detection that may not be available, mainly because there may not be previous intelligence information about the presence of mines in their area of operations.

2. Initial Assumptions

Some assumptions about the minefield will be made relative to the channel the ship is going to cross. This path is going to be kept constant.

Figure 27 represents the aim of the enemy that has planted the mines. However, there is an error in planting the mines, and it is represented with a normal distribution respect to the desired placement points, with a mean of zero meters and standard deviation of 30 meters. This error is only considered in the transverse direction, since errors in the longitudinal direction are assumed to have minor effect on the result.

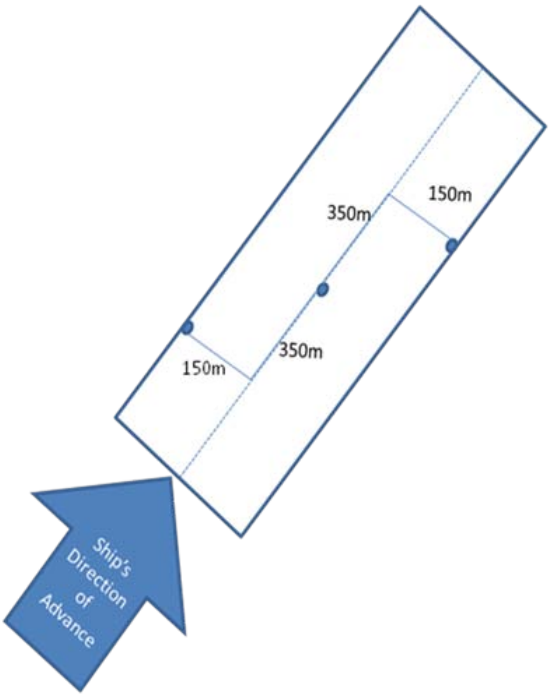

Figure 27. Description of the Desired Placement of Mine Distribution

Once the configuration of the threat is defined, there are still two problems to be considered:

- Detection of mines
- Mine effectiveness

3. Detection Problem

A description of the terms involved in the active sonar equation was provided in section A.1 of this chapter. The description parameters used for this particular operational situation are below:

Table 19. Scenario Dependent Parameters

Factor	Value	Source
Salinity (parts per thousand)	36	Figure 6-3 & 6.4 [22]
Temperature ($°C$)	27	OPSIT 3
Depth (m)	5	Assumed
Speed of sound (m/s)	1581.1	Eq. 6.22 [22]
Bottom losses (dB)	16	An average value based on Figures 6-17 & 6-18.[22]
Target Strength TS (dB)	-14.7	Based on Table 11-11 and assumed mine radius. [20]
Noise level (NL) (dB)	60	Figure 7.5 [19]

Table 20. Sensor System Dependent Parameters

Factor	Value	Source
Attenuation Coefficient (dB)	Implemented in look-up table in the model (frequency dependent)	Table 18
Scattering losses (dB)	$1.04*(Sea\ State)*\sqrt{f(kHz)}$	Eq. 6.73 [22] (Frequency dependent)
SL	$171+10\log(P*E_{ff})+DI$	[20]
TL (dB)	$20\log R+\alpha(0.001R)$	Eq. 11.30 [20] It is Frequency dependent
DI	Depends on the Array type and number of elements.	Table 17

As before, the following factors should be input for every configuration of the sensors:

- Frequency, 1 to 100 kHz [20]
- Array Type (linear, rectangular, circular, cylindrical)
- High of array (for rectangular or cylindrical)
- Diameter of array (for circular or cylindrical)
- Length of array (linear or rectangular)
- Integration time, in seconds
- Power, in watts
- Power conversion efficiency

As in OPSIT 1, a probability of Detection $P_D = 0.9$ and a probability of false alarm $P_F = 10^{-4}$ were selected, given the parameter d=14dB. With those choices, and based on the DI, the detection threshold (DT) is calculated.

4. Mine Effectiveness

The probability of actuation of the mine depends on the sensitivity of the mine and the minimum athwartship distance during the pass through the channel. Since it depends not only on the mine characteristics, but also on the platform signatures, it is necessary at this point to assume a behavior profile, which was adapted from [28]. It is described in Figure 28.

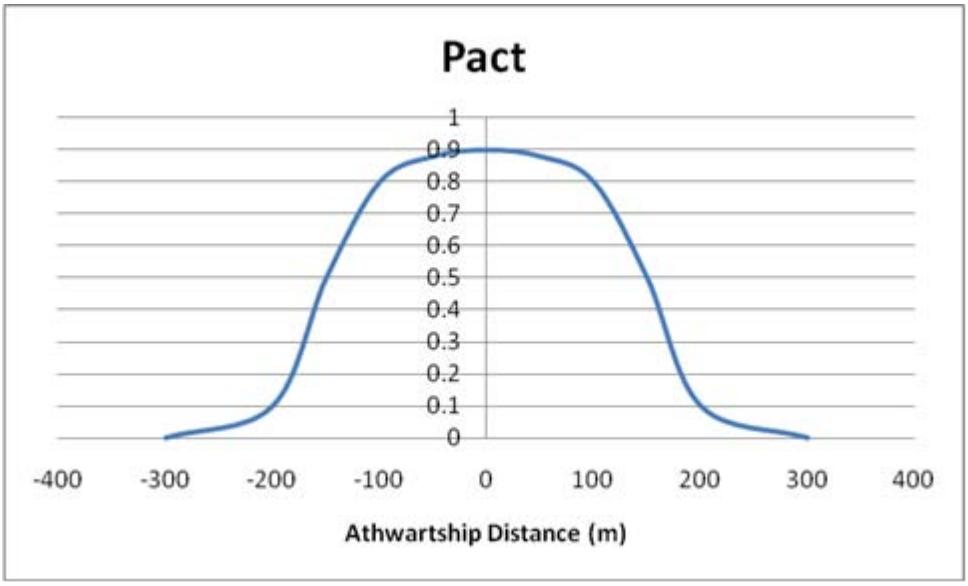

Figure 28. P_{ACT} Vs. Athwartship Distance. After [28].

It is also assumed that, if the mine is actuated, the probability of damage is 1. This is a conservative assumption, given the unknown survivability characteristics of the platform which is out of the scope for this thesis. The maneuverability of the ship related to the different detection distances is assumed in the same way:

- If the detection distance to the mine is below 100 m, the ship does not have enough reaction time and will have to face the mine, as if it did not detect the mine.
- If the system is detected between 100 m and 300 m, the ship is able to maintain the distance from the mine. However, since it is within the actuation distance of the mine, it is probable that the mine will activate and damage the ship while being deactivated.
- If the mine is detected before 300 m, the ship is assumed to have the means to safely remove the mines, with no probability of activation.

Those assumptions and parameters have been modeled using discrete event simulation in ExtendSim®.

5. Model Implementation

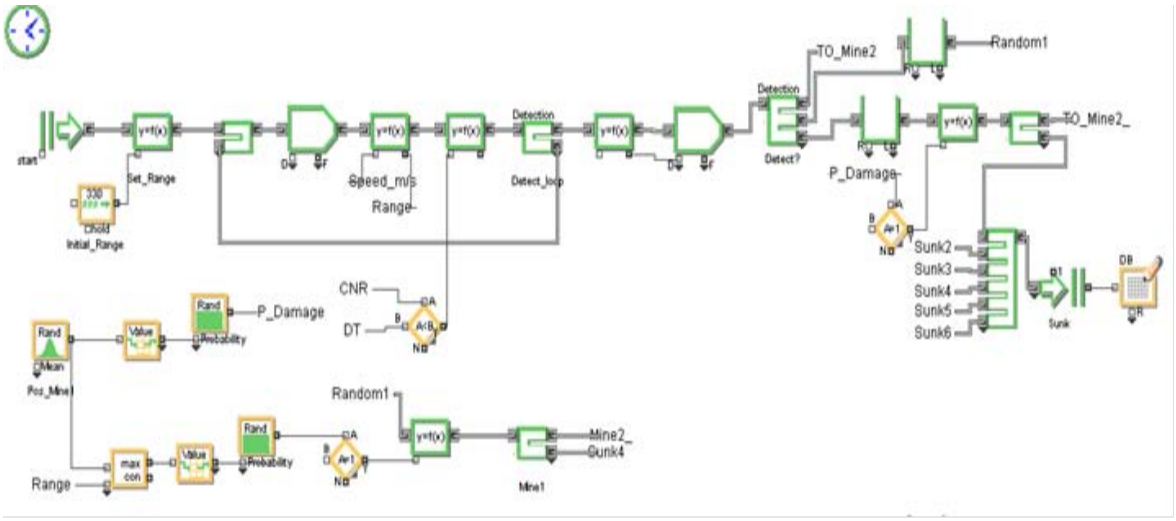

Figure 29. Mine 1 Branch

The simulation is represented by three very similar branches, one for each mine. The branch for mine 1 is represented in Figure 29, and branches for mines 2 and 3 are represented in Figures 30 and 31 respectively. Once the ship is created, an initial distance to the mine is assigned as an attribute. The ship is maintained within the loop until the CNR gets equal or bigger than zero. There are three possible paths, which depend on the detection distance, according to the ranges described above. There is also a variable delay associated with each path.

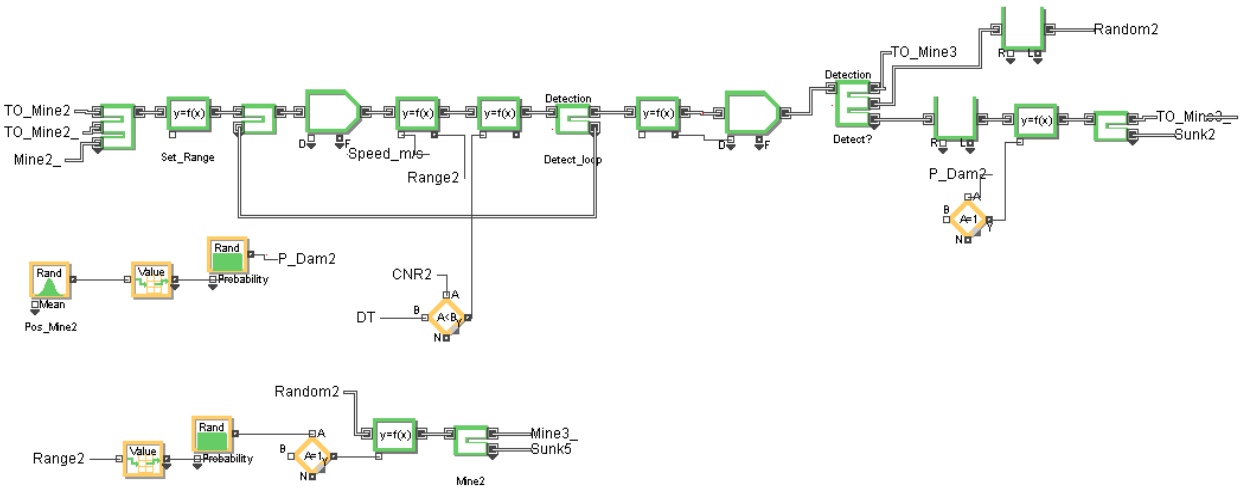

Figure 30. Mine 2 Branch

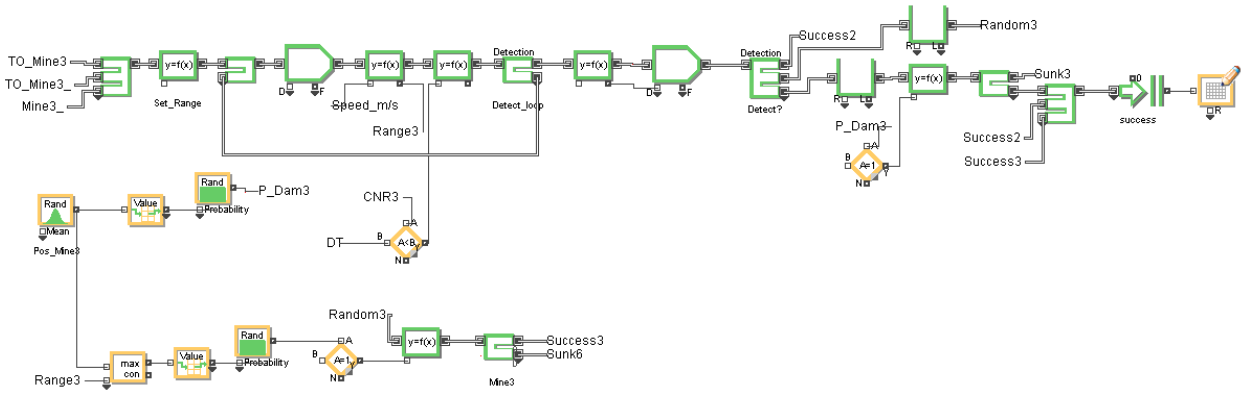

Figure 31. Mine 3 Branch

D. OPSIT 4

1. Detection of Surface Ships

Section B.2 of this chapter presented the radar detection formula. However, surface ship detection is limited by the earth's curvature. The formula in Equation 9 for radar horizon establishes this limitation as a function of the radar antenna altitude and the target altitude. It also accounts for the refraction phenomenon that blends waves toward the earth's surface, increasing the detection range, as seen in Figure 32.

$$R_{RH} = \sqrt{2\,\mathrm{Re}'^{*}\,h_t} + \sqrt{2\,\mathrm{Re}'^{*}\,h_r} \quad (9)$$

In the above formula, Re is the earth's radius, which corresponds to $6378\ km$ at standard atmospheric conditions. Re' is the equivalent earth radius caused by atmospheric refraction, and it is approximately 4/3 of the earth's radius (i.e., $\mathrm{Re}' \approx \frac{4}{3}\mathrm{Re}$.); h_t and h_r correspond to the transmitter (the searching platform) antenna altitude and the receiver (the target) altitude, respectively.

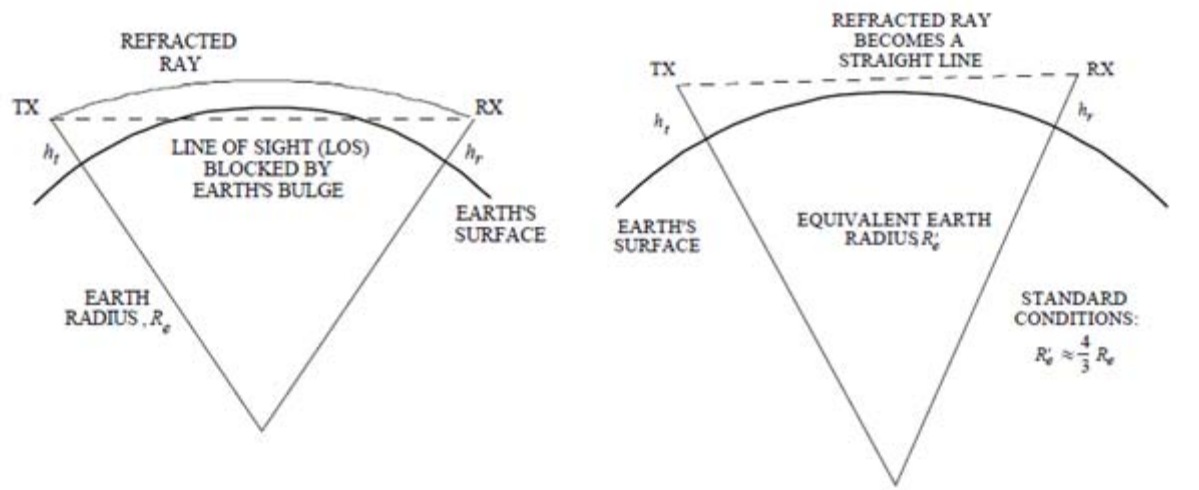

Figure 32. Radar Horizon. From [29].

By applying the above formula to the Red frigate—PES detection problem, with the antenna high equal to 24 m for both, the maximum detection range would be equal to 40.41 km.

2. RCS Estimation

Skolnik (1980) suggested Equation 10 to estimate the median RCS of a ship based on its displacement and the frequency of operation of a given seeker [30]:

$$\sigma_{m^2} = 1644 \times \sqrt{D_{kT}{}^3 \times f_{GHz}} \quad (10)$$

Assuming a PES mean displacement of 2000 Ton and since the Red frigate's radar frequency is 3 GHz, the PES RCS is estimated as:

$$\sigma_{m^2} = 1644 \times \sqrt{2^3 \times 3} = 8054 m^2$$

This estimated RCS allows for calculating the distance at which the Red frigate detects the PES ship, by using the radar formula discussed in section B.2 of this chapter. By doing so, and neglecting attenuation losses, the frigate detection range would be 407.8 km. However, in this case, the radar horizon is lower than that distance, limiting the detection range to 40.41 km, as calculated in the previous section.

The same method will be implemented within the ExtendSim® model to estimate the RCS of Red ships.

For the Red SSM missiles, the RCS was calculated using the sphere approximation, Equation 11. Based on the missile diameter (34.8 cm), its RCS is 0.113 m^2.

$$\sigma_{m^2} = \pi \times r^2 \quad (11)$$

The PES SSM missiles' RCS will be modeled within ExtendSim® using the same approximation and will change as a function of the chosen missile dimensions.

3. Probability of Hit for Surface-Surface Missiles

Table 21 shows the result of the historical analysis developed by [31] of missile engagements against ships, both combatant and non-combatant, which have occurred since 1982. In the analysis, the targets are divided into three categories: “defenseless,” targets without defense capabilities, such as merchant ships; “defendable,” surface combatants that were not able to respond to the attack due to their readiness state; and “defended,” targets, which in fact reacted against the missile with some soft kill or hard kill contra measures.

Those probabilities are incorporated within the model, as a means to determine the success of independent PES fired SSM against the Red units. The success of Red fired SSMs, on the other hand, will depend on the combination of hard and soft kill measures, as well as sensor parameters used by PES.

Table 21. Probability of Hit of SSM. After [31].

	Probability of Hit
Defenseless Target	0.981
Defendable Target	0.630
Defended Target	0.450

4. Model Implementation

The figure below depicts the possible series of events simulated in the ExtendSim® model. Since Red detection is only limited by the radar horizon, and both Red and PES are assumed to have the same antenna height, the following are the only two possible options:

- Both the Red force and PES ship detect each other simultaneously, or
- Red force detects PES, but PES cannot detect Red force.

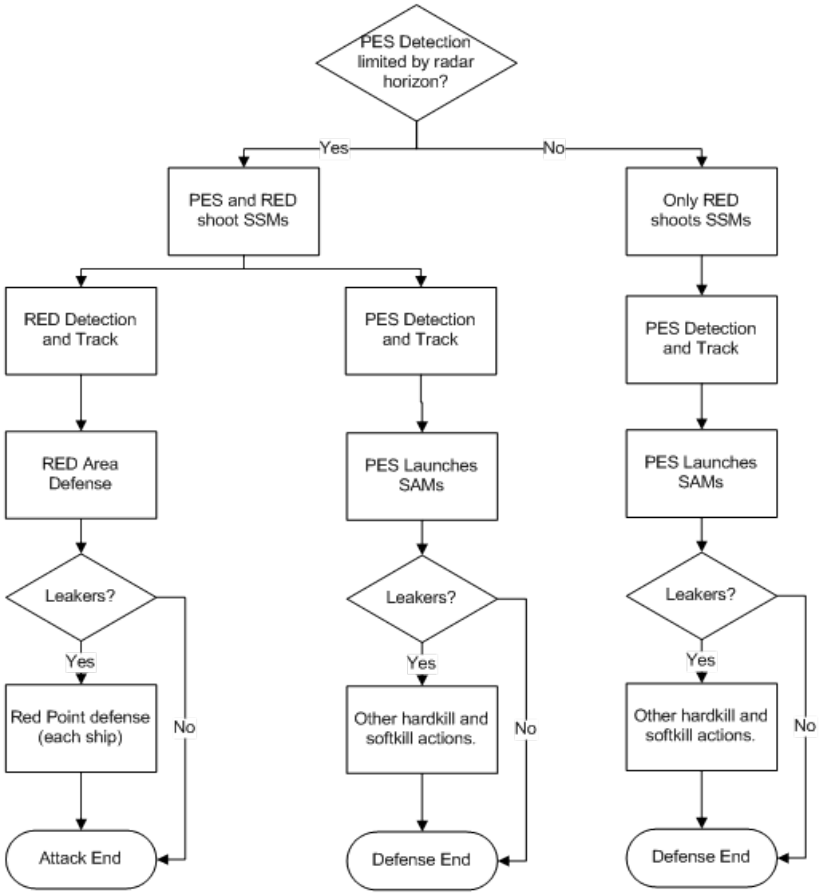

Figure 33. OPSIT 4 Event-Tree

Figure 34 illustrates the launch of Red missiles, as well as PES detection, tracking, and SAM launch. The engagement options considered are two, as described in the event tree: the first option is the simultaneous detection and fire of SSMs of PES and Red forces, which happens when PES detection is limited by radar horizon. The second option is only Red detection and firing of SSMs, which takes place when the PES ship

does not detect the Red battle group. This happens when PES detection is limited by radar characteristics, rather than the radar horizon.

Red missiles are launched from each platform with a lognormal distribution with mean time between launches of one second and standard deviation of 0.1 second. Once PES detection takes place, it defends first with SAMs. An initial delay of 5 seconds is assumed for tracking and classifying the threat, as well as a mean time between SAM launches of one second.

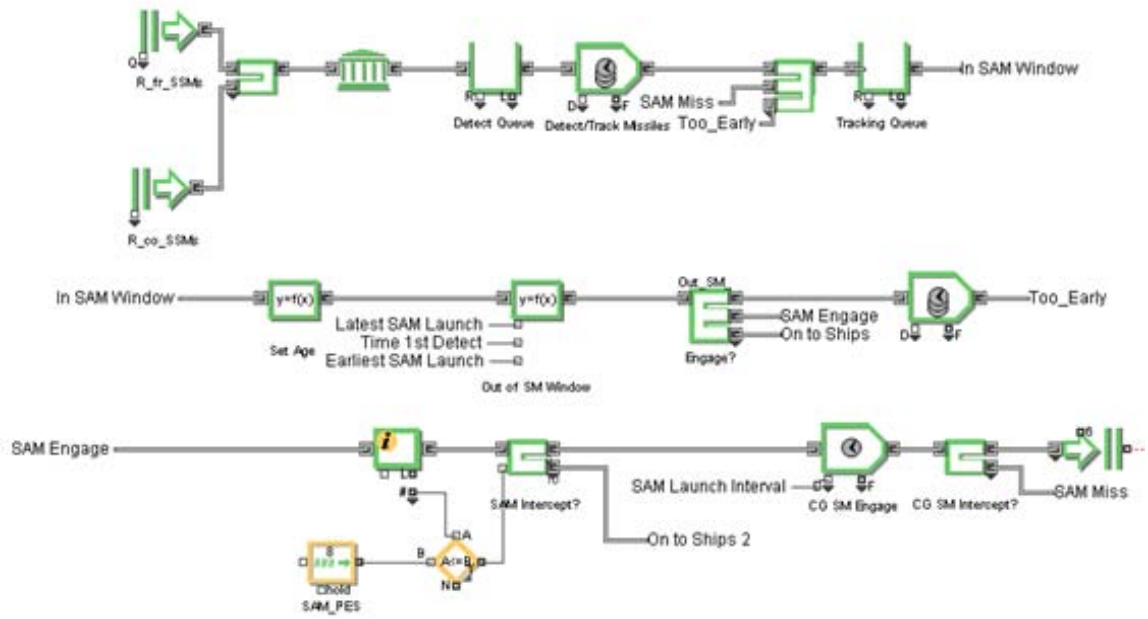

Figure 34. OPSIT 4 Detection, Tracking and Defense with SAMs

Figure 35 represents the rest of PES engagement paths depending on the point defense configuration. Options include decoys, close in weapon systems, a combination of both, and neither. The final output of each path is defined by probabilities input by the user.

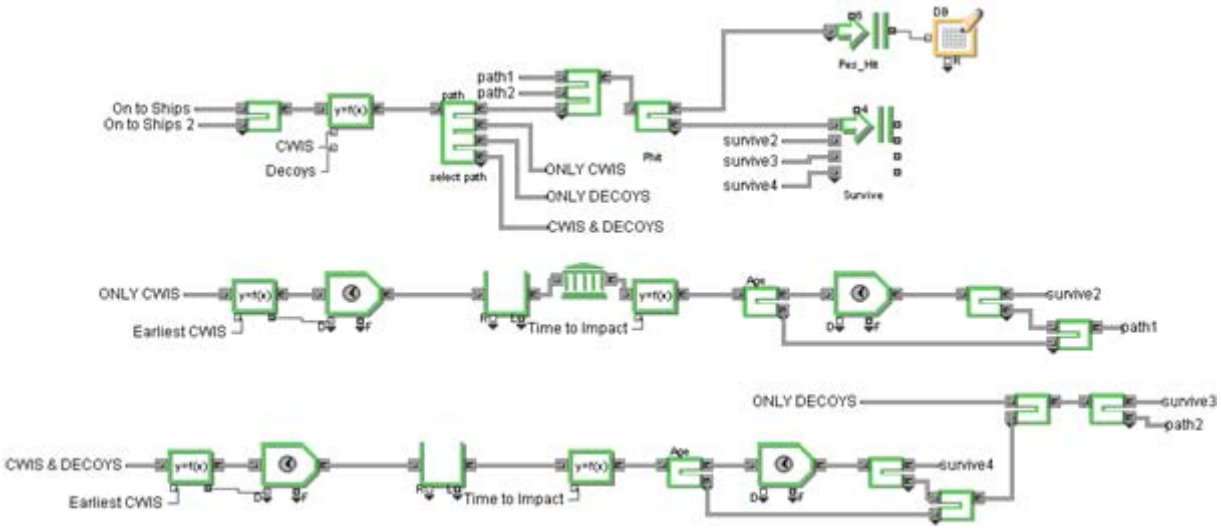

Figure 35. OPSIT 4 Point Defense Options

Figure 36 presents the launch of PES SSMs, provided that Red fleet detection takes place and kinematics analysis validates that enemy targets are within range. Figure 36 also represents Red's first layer defense with SAMs, while Red point defense of leakers is represented in Figure 37, which is based on the probabilities defined in Table 21.

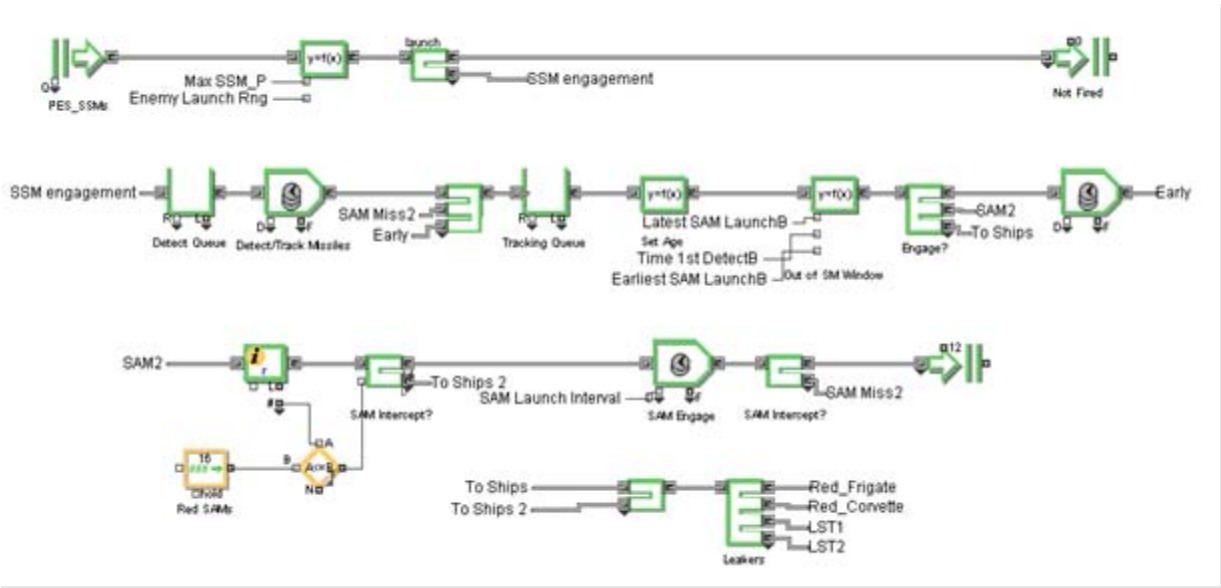

Figure 36. OPSIT 4 SSM Launch

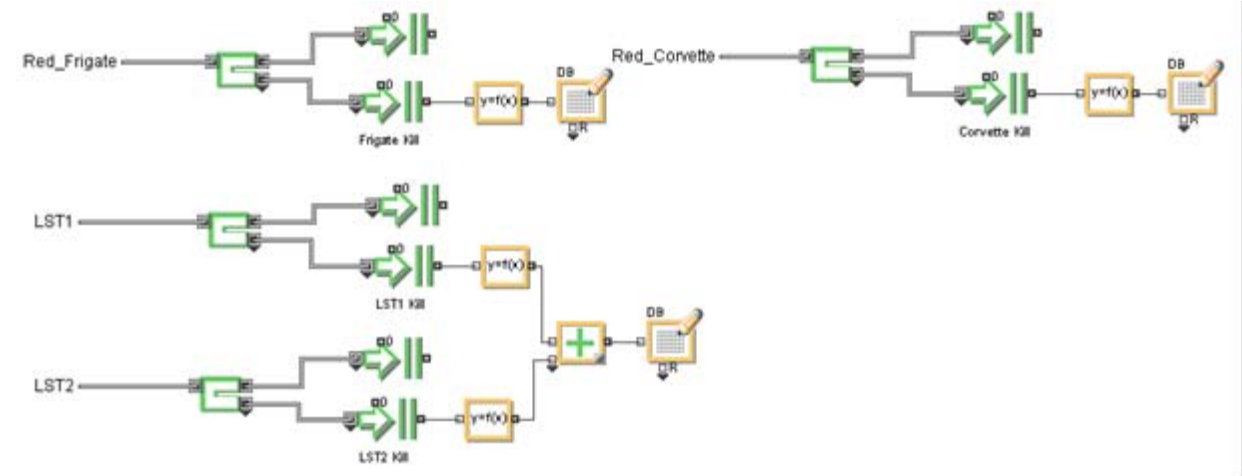

Figure 37. OPSIT 4 Attack Output

THIS PAGE INTENTIONALLY LEFT BLANK

IV. EXPLORING THE DESIGN SPACE

A. DESIGN OF EXPERIMENTS (DOE) AND RESPONSE SURFACE MODELS (RSM)

DOE in general is a statistical technique used to maximize the information about a process using a minimum of effort. By using DOE, the effect of many possible variables (called factors) on the process output (or response) can be identified.

DOE provides a structured approach for analyzing a process, since it allows the identification of which factors of the system to be designed have the greatest effect on the response, as well as the interactions between factors. In addition, it does this while keeping the amount of modeling and simulation to a minimum.

Once the most important variables have been identified, it is usually beneficial to design another experiment with those variables as factors at a higher number of levels. As revealed by [32] and [33], which implemented these these techniques precisely in the area of simulation, it is possible to develop a higher order model with the resulting data. The plot of that model would be a three-dimensional surface that can be used to predict the simulation responses. This model is called a “response surface” or “metamodel”.

In this thesis DOE, RSM, and the consequent analyses are performed using SAS JMP® software, which provides the means for exploring the design space in the conceptual phase of the combat system design, with the purpose of identifying the combat system variables that most influence the system effectiveness, described by the OMOE.

The early identification of those variables allows a designer to focus scarce resources, and the allocation of power, weight, and volume in a way that optimizes the ship design.

B. SELECTION OF LEVELS FOR EACH FACTOR

The selection of factor levels was as follows: first, develop a study of the systems of interest used in surface combatants, both in service or in development, in the range of displacements of frigates, corvettes, and OPVs. Second, conduct research in the open literature for each main sensor or weapon, in some cases calculating the unknown variables based on the available information. Finally, identify the lowest and highest value for each variable and use these values for the DOE. A summary of the collected information is presented in Appendix A.

The reason for this approach is to characterize the weapons and sensors that naval architects have used in the design of combatant ships in the displacement range that could be of interest to the Colombian Navy.

C. ANALYSIS OPSIT 1

Table 22 presents the experimental design layout, using a fractional factorial design. This is a screening design that uses just two levels for each factor, and consists of sixteen experiments. The table also presents the outputs of the simulation for each one of the three relevant metrics, as well as the MOE. The MOE is a function of metrics M1 (Merchant Survivability), M2 (Probability of kill the submarine), and M3 (PES Survivability), as seen in Equation 12. The combination of these three metrics into a single MOE should be based on stakeholder's definition of success criteria. In this particular situation, the three metrics has been given the same coefficients for the purpose of illustration, that is:

$$MOE = \omega_1 * M1 + \omega_2 * M2 + \omega_3 * M3 \quad \text{where } \omega_i = \frac{1}{3} \qquad (12)$$

However, during this OPSIT analysis, all the metrics are carried through with the intention of highlighting the drawbacks of combining different metrics into a single metric (i.e., the MOE).

After running the simulation model for the different combinations of sensor and weapon parameters, a model was fitted in JMP® to the data against MOE and the individual metrics. The details of the statistics of the model are in Appendix B.

Table 22. DOE Matrix and Response for OPSIT 1

2/0 16/1	Pattern	Sonar Frequency	Tx Power	Diameter Array	High Array	#Torpedo	Warhead	Torpedo speed	MOE	Merchant Survivability	Pkill Submarine	PES Survivavility
1	+--++--	8600	15000	0.85	1.22	6	34	28	0.36380	0.709417	0.014	0.368
2	--++--+	2200	15000	1.22	1.22	4	34	45	0.36577	0.705333	0.014	0.378
3	--------	2200	15000	0.85	0.55	4	34	28	0.35861	0.708833	0.005	0.362
4	-+--+-+	2200	96000	0.85	0.55	6	34	45	0.36244	0.693333	0.011	0.383
5	+++++++	8600	96000	1.22	1.22	6	45	45	0.56280	0.739417	0.591	0.358
6	++-+--+	8600	96000	0.85	1.22	4	34	45	0.56375	0.74825	0.599	0.344
7	-++++--	2200	96000	1.22	1.22	6	34	28	0.57186	0.745583	0.669	0.301
8	-++--++	2200	96000	1.22	0.55	4	45	45	0.37463	0.705917	0.017	0.401
9	+-+-+-+	8600	15000	1.22	0.55	6	34	45	0.35830	0.712917	0.013	0.349
10	++--++-	8600	96000	0.85	0.55	6	45	28	0.36141	0.71925	0.015	0.35
11	+-++-+-	8600	15000	1.22	1.22	4	45	28	0.35619	0.718583	0.014	0.336
12	+++----	8600	96000	1.22	0.55	4	34	28	0.36522	0.714667	0.015	0.366
13	--+-++-	2200	15000	1.22	0.55	6	45	28	0.35125	0.71075	0.004	0.339
14	+----++	8600	15000	0.85	0.55	4	45	45	0.35952	0.700583	0.004	0.374
15	-+-+-+-	2200	96000	0.85	1.22	4	45	28	0.56708	0.74925	0.635	0.317
16	---++++	2200	15000	0.85	1.22	6	45	45	0.37019	0.71158333	0.013	0.386

The two individual variables that have the highest influence in the MOE were identified as sonar transmission power and height of the sonar array. But there is also a strong relationship between sonar frequency and torpedo speed, which makes those factors important. This information is presented graphically in Figure 38, where the plot shows that more than 90% of the response is due to the combination of the four described factors. On the other hand, variables like sonar array diameter, torpedo warhead weight, and number of torpedoes have little influence on the output, and consequently, these can be fixed at a convenient level for further analysis of the most critical factors.

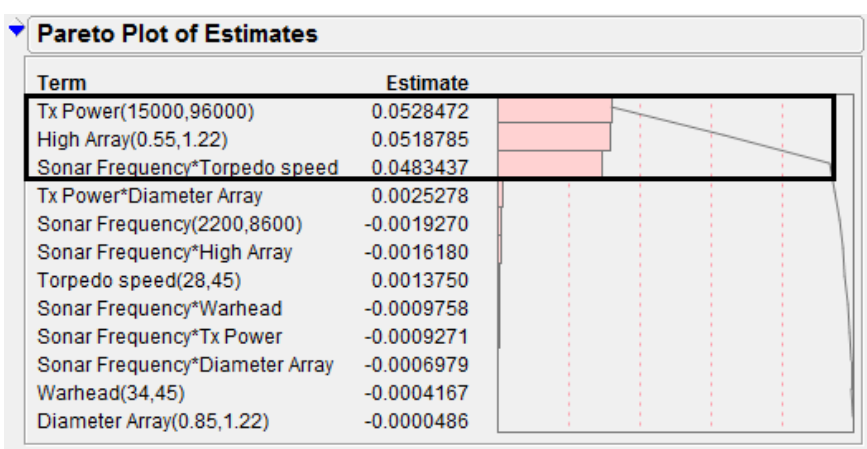

Figure 38. Pareto Plot for the Screening Design Model

Since the first set of experiments is just a screening developed for quick identification of the important factors, it is necessary to design a new set of experiments with more levels for those factors (i.e., transmission power, array diameter, frequency, and torpedo speed), while keeping the other parameters fixed at a convenient level. Then, a central composite design with 26 experiments was selected. The excluded parameters were fixed at their lowest value, given their minor contribution to the MOE.

As a result of the second set of experiments, a new model was fitted to the data, given the relationship between inputs and metrics illustrated through the prediction profiler shown in Figure 39.

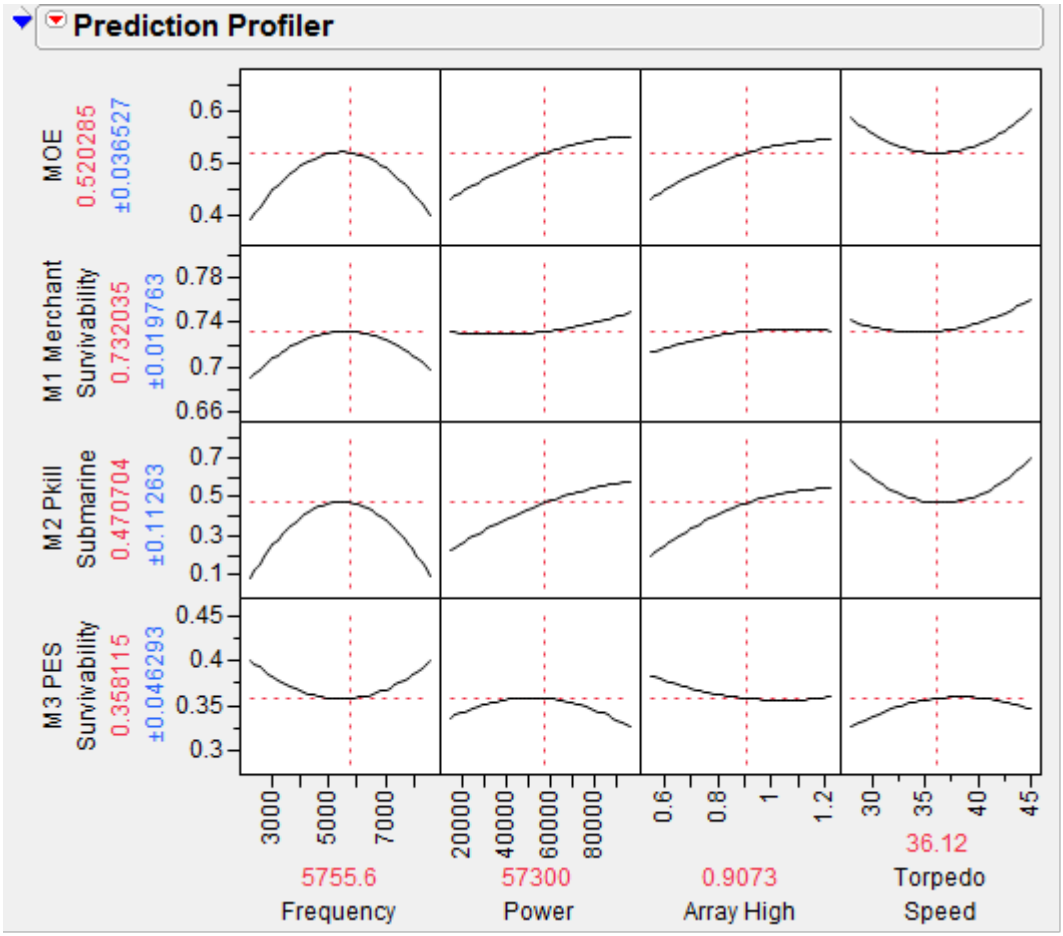

Figure 39. OPSIT 1: Prediction Profiler for MOE

The non-linearity of the responses is clear in Figure 40. Furthermore, it can be deduced from Figure 40 that the combination of different competing metrics into a unique MOE has the effect of hiding valuable information necessary for the decision makers. Therefore, it is useful to keep this information for a trade-off between the different mission success criteria.

An efficient way of making a trade-off between variable levels and metrics is with the aid of the contour profiler available with JMP®. An example for OPSIT 1 is presented in Figure 40. In this plot, the X and Y axis correspond to two factors, in this case, sonar frequency and transmission power, respectively. The other factors have been set to an arbitrary level. Contour lines (which are projections of the RSM on the two input variables plane) represent the metrics of the OPSIT, including the MOE.

In the contour plot, changing the limits of the metrics changes the shadowed area, leaving the available design space white. If no white area is left, then a trade off would be necessary to lower some of the metrics' requirements. This plot is also a good example of what happens when several metrics are combined in a unique MOE. The MOE contour does not represent the stakeholders' desired relationship between the three metrics. In other words, it does not tell us which metrics of the OPSIT should be traded off in order to achieve a higher overall effectiveness.

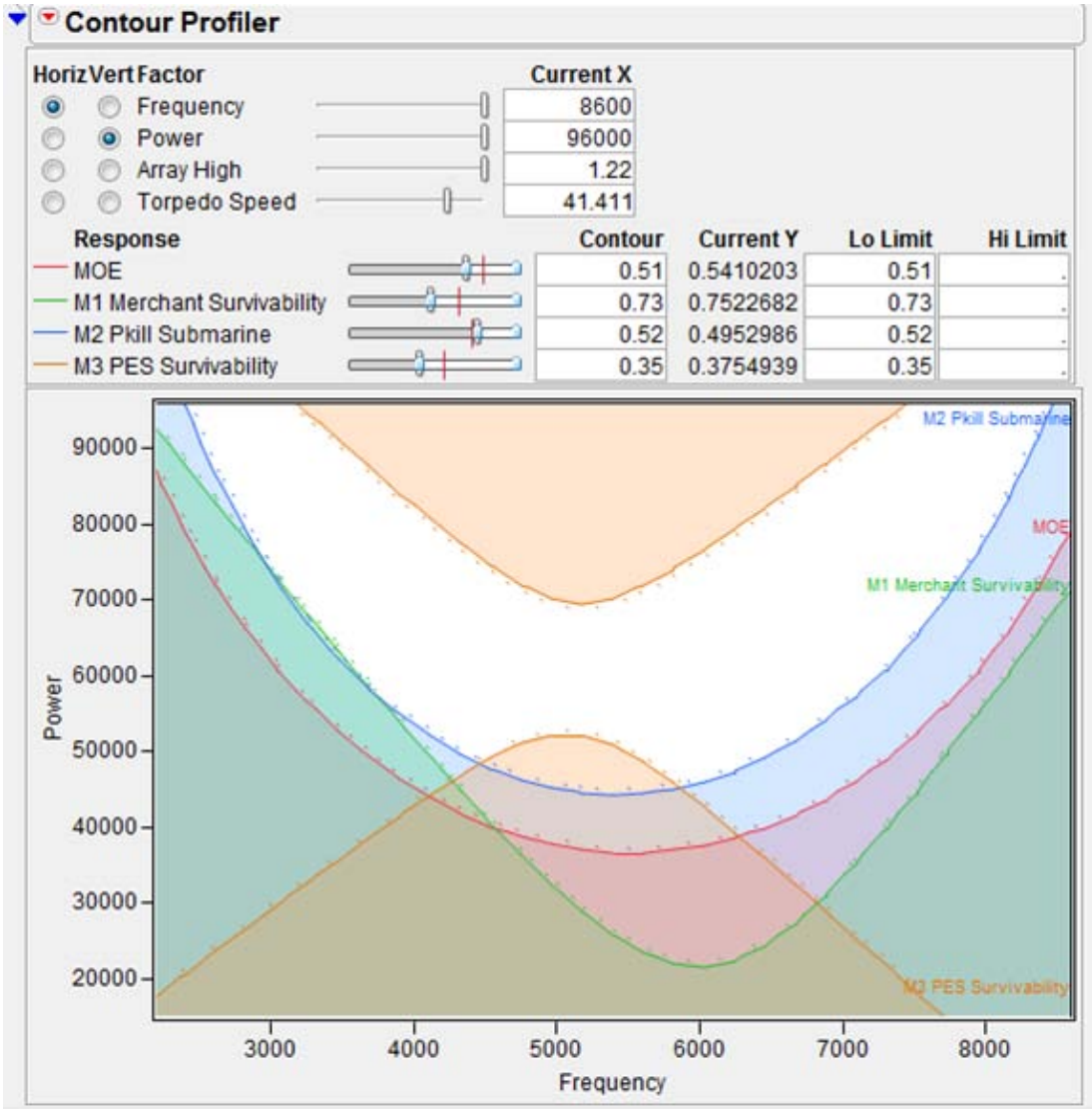

Figure 40. An Example of Contour Profiler

D. ANALYSIS OPSIT 2

Figure 41 presents the prediction profiler for OPSIT 2. An L18 design was selected (see Appendix B) to assess the effect of the nine factors over the MOE, which is the combination of the OPSIT's MOPs (i.e., M1: Pier survivability; M2: Red Aircrafts killed; M3: PES survivability). As in the previous OPSIT and using Equation 13, all the metrics have been assigned the same weighting, that is:

$$MOE = \omega_1 * M1 + \omega_2 * M2 + \omega_3 * M3 \quad \text{where } \omega_i = \frac{1}{3} \quad (13)$$

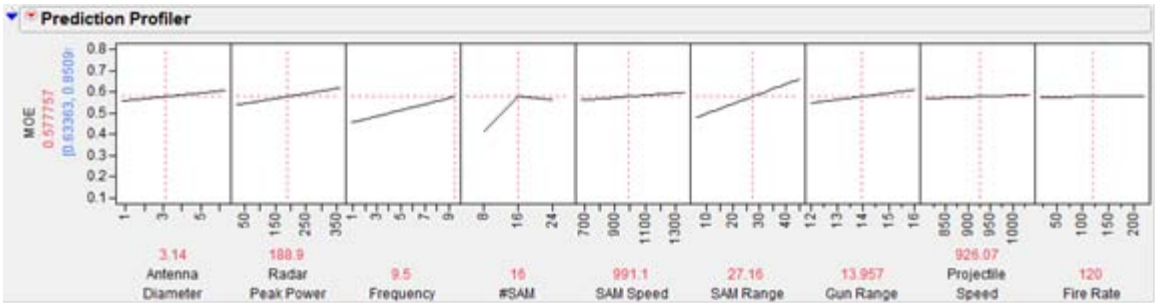

Figure 41. OPSIT 2: Initial Screening Prediction Profiler

In the prediction profiler, Figure 41, the minor contribution of the factors SAM speed, projectile speed, and fire rate to the MOE can be seen. Furthermore, in Figure 42, the Pareto plot shows us that even if those variables are excluded, more than 90% of the model variation can be captured.

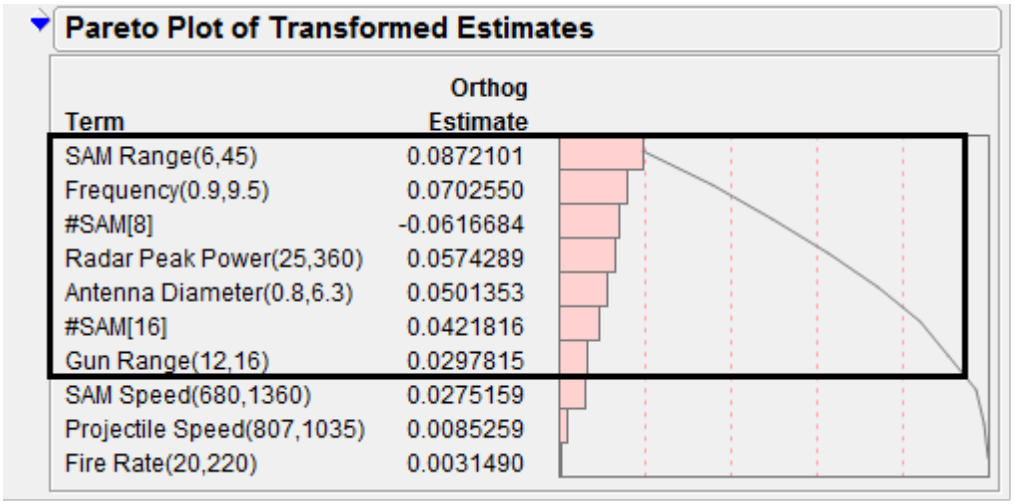

Pareto Plot of Transformed Estimates

Term	Orthog Estimate
SAM Range(6,45)	0.0872101
Frequency(0.9,9.5)	0.0702550
#SAM[8]	-0.0616684
Radar Peak Power(25,360)	0.0574289
Antenna Diameter(0.8,6.3)	0.0501353
#SAM[16]	0.0421816
Gun Range(12,16)	0.0297815
SAM Speed(680,1360)	0.0275159
Projectile Speed(807,1035)	0.0085259
Fire Rate(20,220)	0.0031490

Figure 42. OPSIT 2: Pareto Plot for the Screening Design Model

After setting the excluded variables to their lowest values, a second set of 46 experiments with the remaining six variables was conducted to develop the RSM. Figure 43 presents the prediction profiler of that model, while the statistics and results are presented in Appendix B. In this plot, the high impact of the number of SAM and SAM range over the MOE can be easily identified, while gun range has the lowest impact.

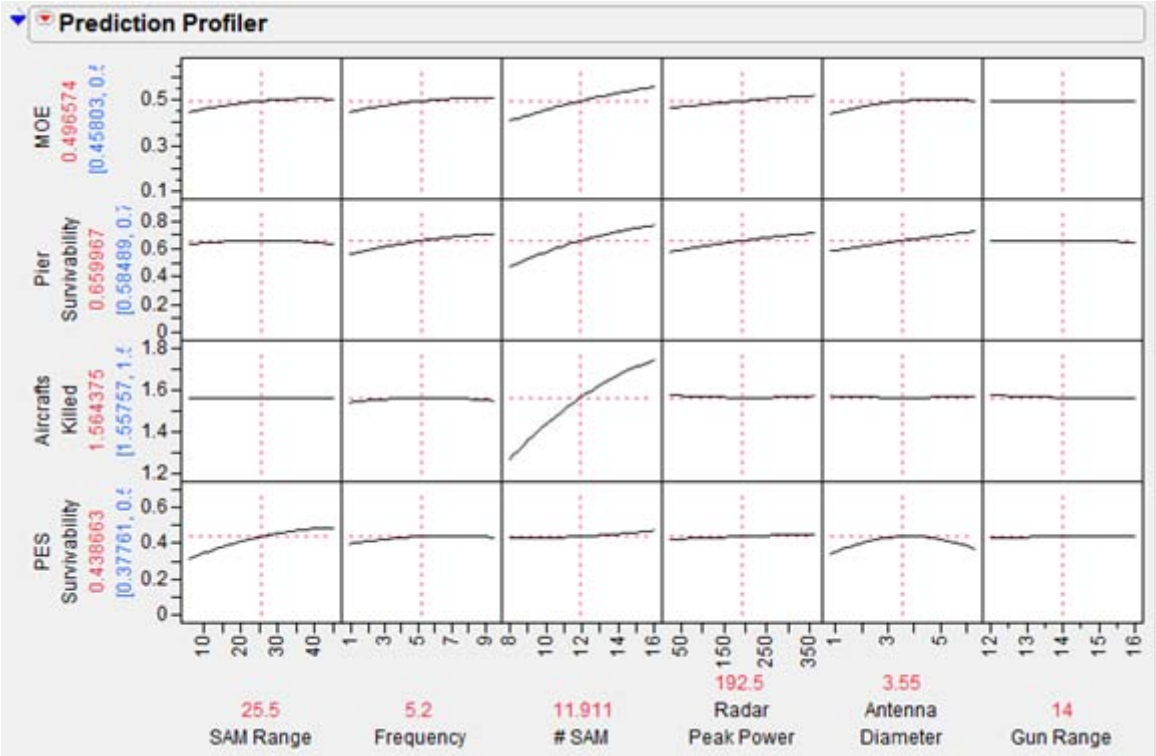

Figure 43. OPSIT 2: RSM Prediction Profiler

The trade-off space between SAM range and the number of SAMs over this particular OPSIT are further investigated, since they constitute important design decisions. To do so, the other variables are fixed to a desired level, in this case, an intermediate level. Then, some constraints were added to the different OPSIT MOPs and the MOE. The resulting white space is our design space left to fulfill the requirements.

In the example below, there is a trade off region for SAM range (between about 30 and 45 km) and for number of SAMs (between 13 and 16) that fulfills the requirements.

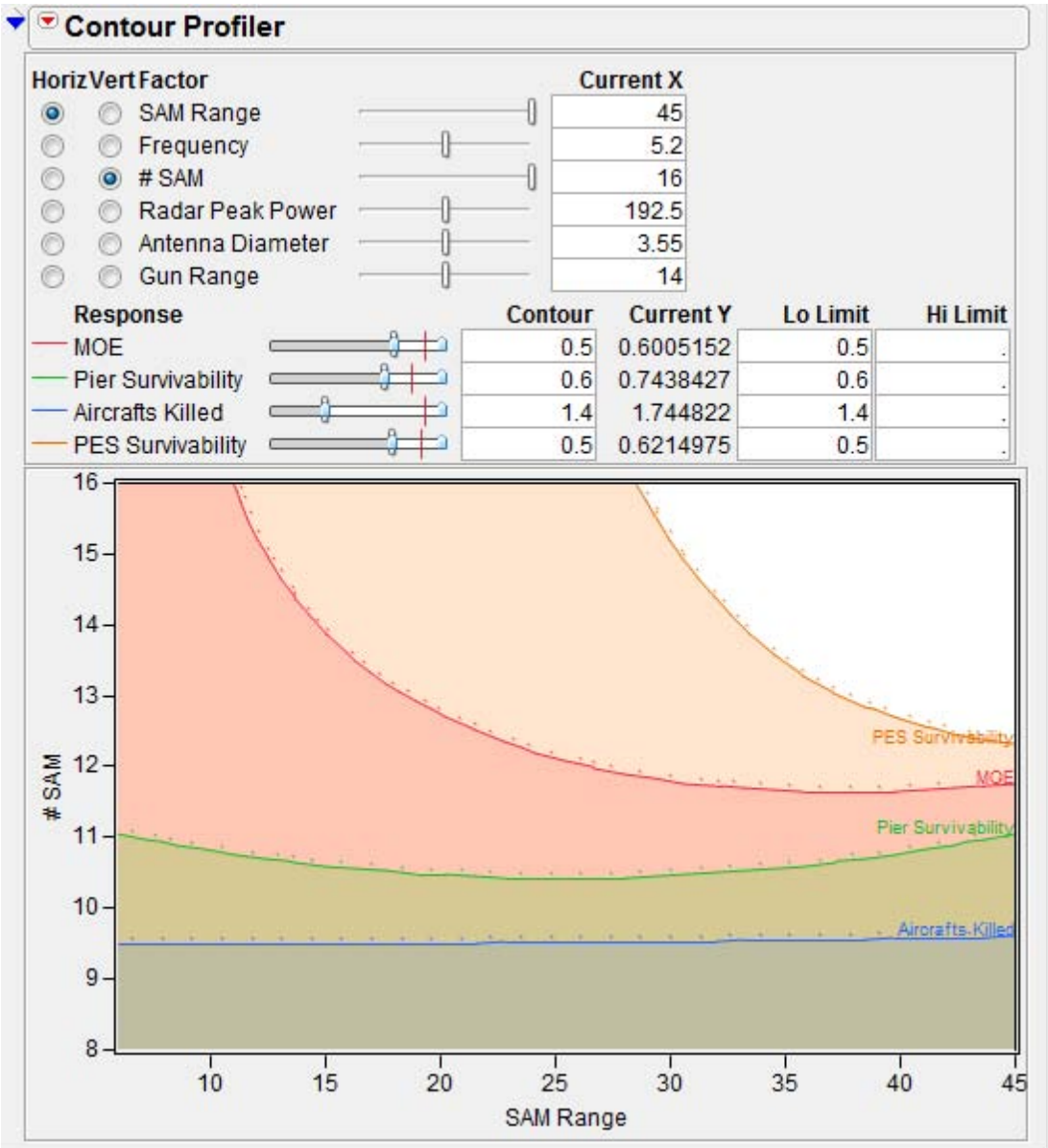

Figure 44. OPSIT 2: A Contour Profiler for Trade-Off Between Number of SAM and SAM Range

E. ANALYSIS OPSIT 3

Since the number of factors is just four for this OPSIT, it is possible to run a RSM model without first running a screening design. Furthermore, this particular OPSIT includes a single metric (PES Survivability), which becomes the MOE. Thus, a central composite design was selected, (see Appendix B) with the correspondent response for

each simulation experiment. Figure 45 presents the prediction profiler, where the relative impact of the variables in the MOE can be compared, while Figure 46 adds the interactions' effect on the MOE.

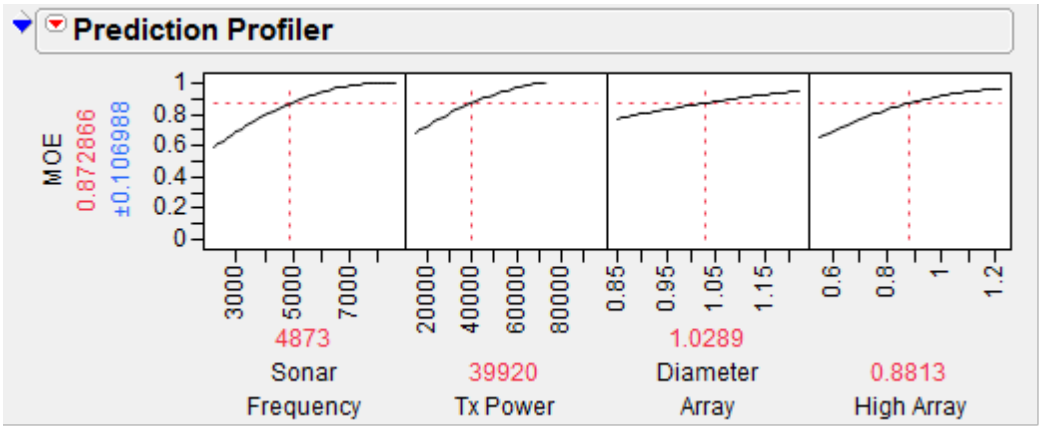

Figure 45. OPSIT 3: RSM Prediction Profiler

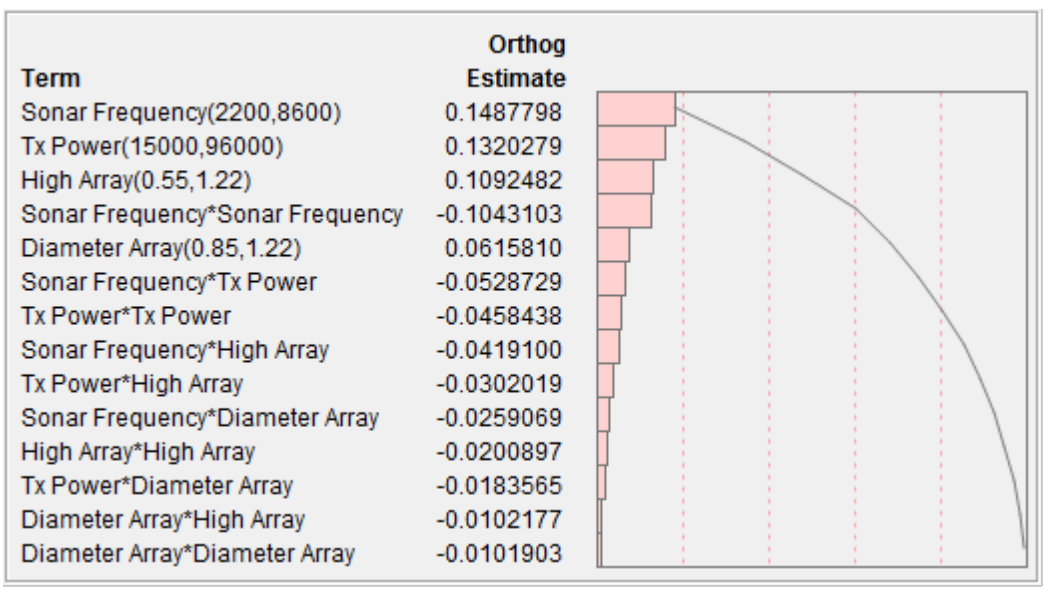

Term	Orthog Estimate
Sonar Frequency(2200,8600)	0.1487798
Tx Power(15000,96000)	0.1320279
High Array(0.55,1.22)	0.1092482
Sonar Frequency*Sonar Frequency	-0.1043103
Diameter Array(0.85,1.22)	0.0615810
Sonar Frequency*Tx Power	-0.0528729
Tx Power*Tx Power	-0.0458438
Sonar Frequency*High Array	-0.0419100
Tx Power*High Array	-0.0302019
Sonar Frequency*Diameter Array	-0.0259069
High Array*High Array	-0.0200897
Tx Power*Diameter Array	-0.0183565
Diameter Array*High Array	-0.0102177
Diameter Array*Diameter Array	-0.0101903

Figure 46. OPSIT 3: Pareto Plot for the RSM

By setting two variables (in this example, diameter and height of the sonar array) that could be constraints given to the designers of the combat system and selecting a limit for the MOE, the design space for the remaining factors (i.e., sonar frequency and

transmission power) can be appreciated. In this way, the process helps ensure that all the design decisions are considered for the combat system effectiveness.

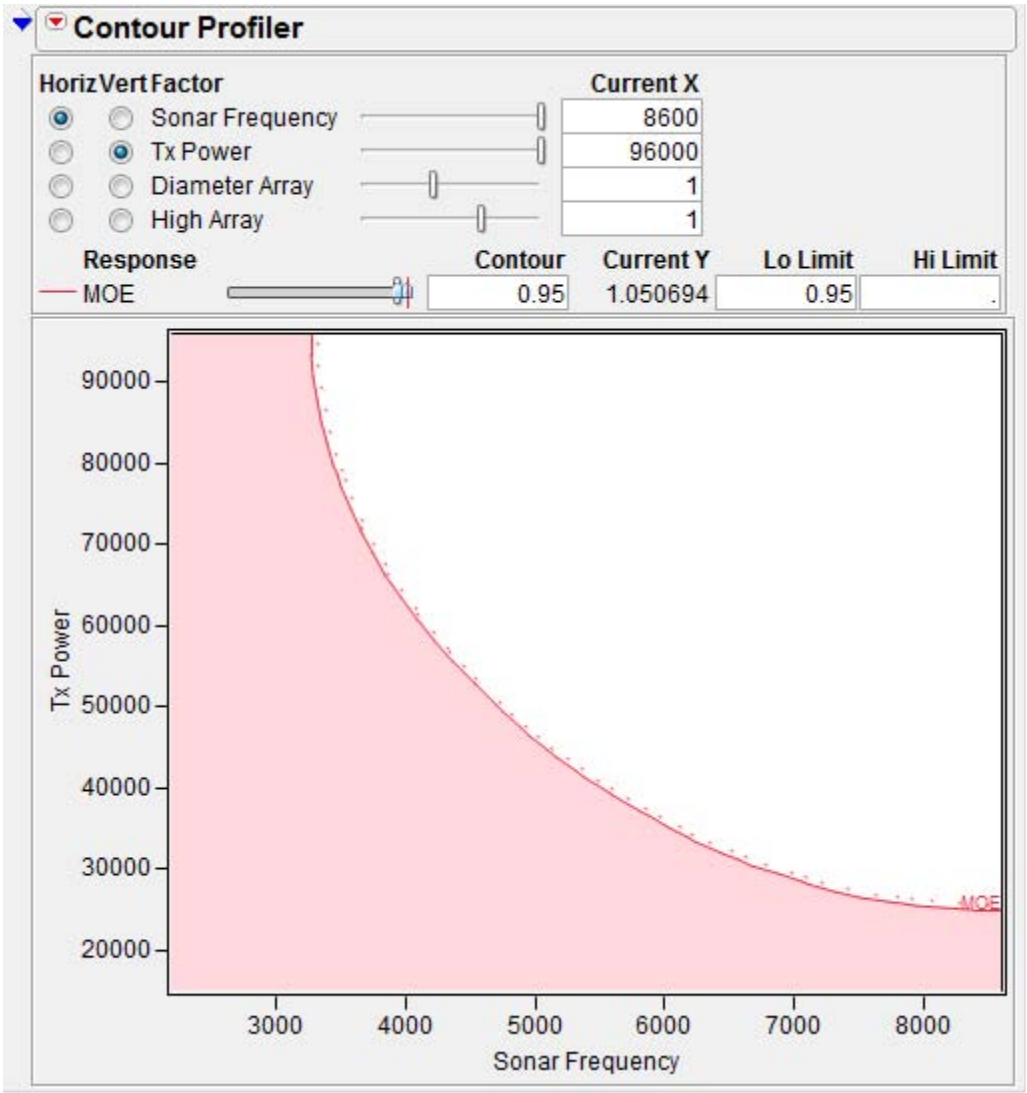

Figure 47. OPSIT 3: A Contour Profiler for Trade-Off Between Sonar Transmission Power and Frequency

F. ANALYSIS OPSIT 4

The model of this OPSIT (i.e., surface warfare) depends on 11 variables. The results of the screening design model are presented in Figure 48. The OPSIT MOE is the weighted sum of three MOPs (i.e., M1: Mean PES received missile hits; M2: Mean Red

surface combatants killed; M3: Mean Red LSTs killed), where as in previous OPSITs, all the metrics have received the same weighting, as seen in Equation 14:

$$MOE = \omega_1 * M1 + \omega_2 * M2 + \omega_3 * M3 \quad \text{where } \omega_i = \frac{1}{3} \qquad (14)$$

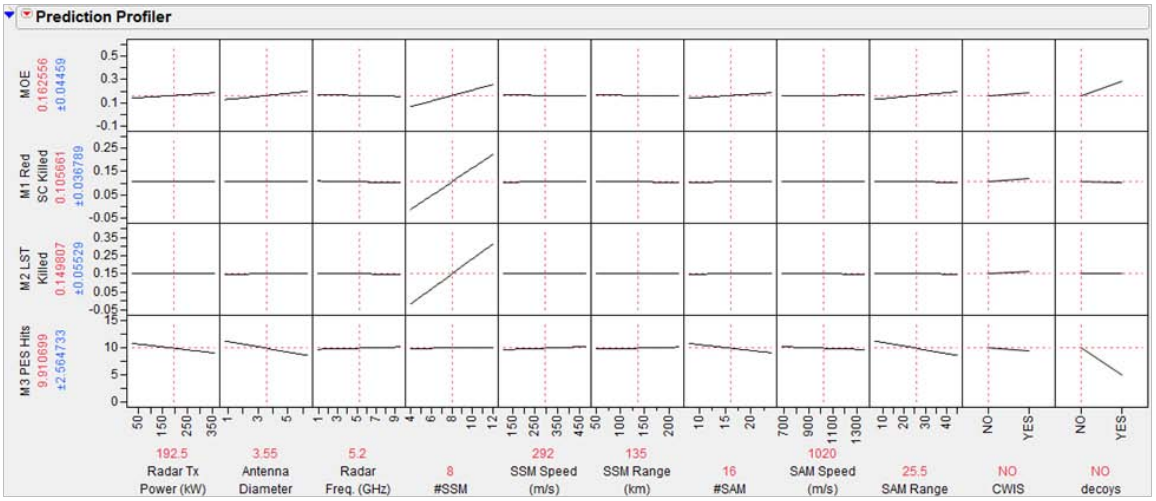

Figure 48. OPSIT 4: Initial Screening Prediction Profiler

In the profiler, the effect that the number of SSMs and the inclusion of decoys have on the response can be identified. However, unlike the screening design obtained in OPSITs 1 and 2, where the important factors from the model perspective were easily determined with the Pareto plot, in this particular case there are no factors that could be excluded while still keeping 85–90% or more of the model explanation. This is illustrated in Figure 49. But in order to proceed to a higher order model, it was necessary to reduce the variables to a maximum of eight, given the constraints of the software used. This line of thought was followed:

Since SSM range seems to have relatively little influence in the response, and since a medium level of this variable is still higher than the radar-horizon detection range, this variable was set to medium level (i.e., 135 km).

SAM speed seems to have little effect as well, so it was set to the medium level (i.e., 680 m/s).

Given that the high effect of decoys in the output is clear, a design decision should be made at this point to keep the decoy system. This decision will reduce the number of variables for the RSM.

Pareto Plot of Estimates

Term	t Ratio
#SSM(4,12)	8.223228
decoys[NO]	-5.581402
Antenna Diameter(0.8,6.3)	3.090477
Radar Tx Power (kW)*SAM Speed (m/s)	2.937765
SAM Range(6,45)	2.910843
#SAM(8,24)	2.032613
Radar Tx Power (kW)*Radar Frequency (GHz)	1.979949
Radar Tx Power (kW)*SSM Range (km)	1.940909
Radar Frequency (GHz)*#SSM	-1.201822
Radar Tx Power (kW)*CWIS[NO]	1.067752
CWIS[NO]	-0.945969
Radar Frequency (GHz)(0.9,9.5)	-0.676964
Antenna Diameter*SSM Speed (m/s)	-0.673829
Radar Tx Power (kW)*#SSM	-0.642087
Radar Tx Power (kW)*SAM Range	0.621723
Radar Tx Power (kW)(25,360)	0.620814
SSM Speed (m/s)*SSM Range (km)	-0.556367
SSM Speed (m/s)(108,476)	-0.553870
SAM Speed (m/s)(680,1360)	0.528580
SSM Range (km)(50,220)	-0.501616
Radar Tx Power (kW)*#SAM	-0.456269
Antenna Diameter*Radar Frequency (GHz)	-0.379602
Radar Tx Power (kW)*decoys[NO]	0.275718
Radar Tx Power (kW)*Antenna Diameter	0.142952
Radar Tx Power (kW)*SSM Speed (m/s)	-0.095357
Antenna Diameter*#SSM	0.088772

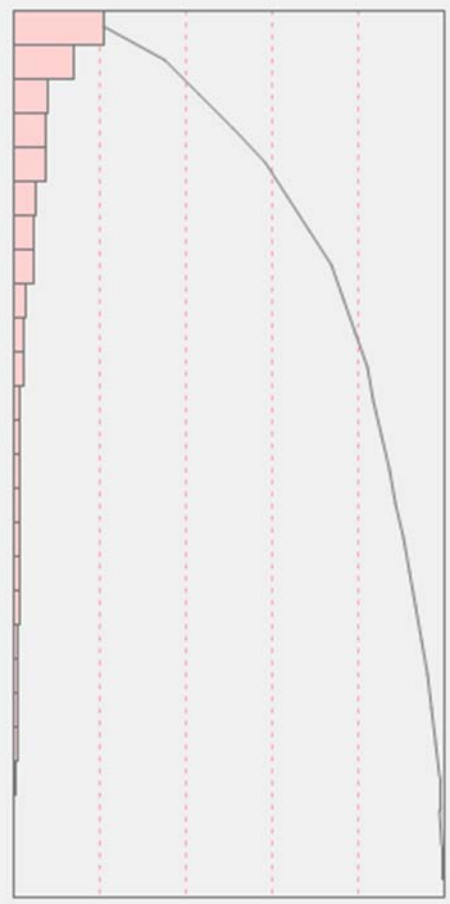

Figure 49. OPSIT 4: Pareto Plot for the Screening Design Model

With those design decisions, the number of variables to study with the RSM was reduced to eight. A central composite design (presented in Appendix B) was developed with those variables, with 2 center points, for a total of 82 experiments. The resulting RSM model profiler is shown in Figure 50. From that profiler, the result is that neither the highest power nor the highest antenna diameter are needed for the highest possible MOE, but a high number of at least medium range SSMs (i.e., 25.5 km) is necessary.

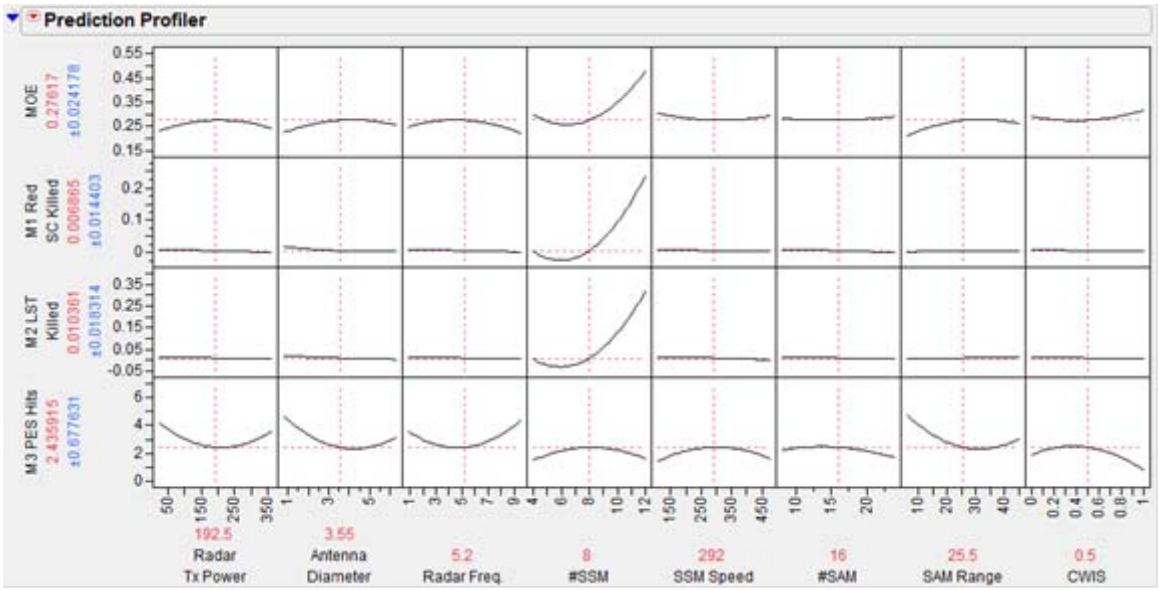

Figure 50. OPSIT 4: RSM Prediction Profiler

With the contour profiler help in Figure 51, an example situation of trade-off analysis has been set up, where radar parameters (i.e., power, antenna diameter, and frequency) and SAM range were set up to intermediate levels, while Close In Weapon System (CIWS) were excluded (i.e., no CIWS in the combat system configuration), and SSM speed was set to its higher level. With the constraints implemented, the design space between number of SSMs and SAMs can be realized. The design space is the small white stripe at top of figure 51. As can be seen there is no range to select from for the number of SSMs, but any selection of any number of SAMs satisfies the constraints.

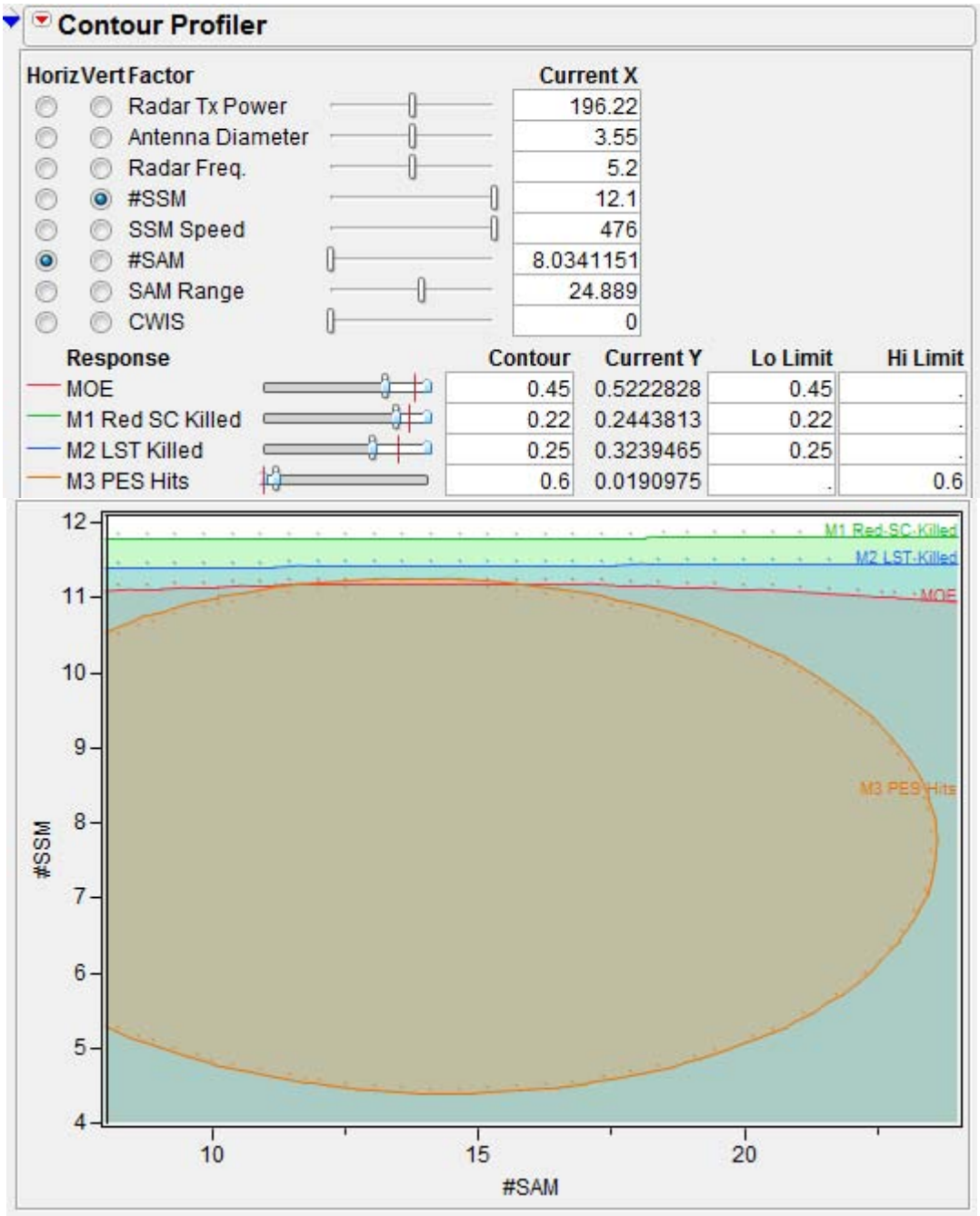

Figure 51. OPSIT 4: A Contour Profiler for Trade-Off Between Number of SSM and Number of SAM

G. CALCULATING THE OMOE

The OMOE is the weighted sum of individual MOEs. In this particular situation all MOEs have been given the same weight. That is:

$$OMOE = \omega_1 * MOE_1 + \omega_2 * MOE_2 + \omega_3 * MOE_3 + \omega_4 * MOE_4 \text{ where } \omega_i = \frac{1}{4} \quad (15)$$

Since the statistical models for all the OPSITs are now available, the OMOE can be optimized by manually extracting the MOE equation in each RSM and setting up a formula that combined the MOEs into the OMOE. However, while this process would be simple in nature, it would also be very tedious and outside the scope of the thesis, given the large number of terms involved.

Instead, it was decided to generate different alternative combat system configurations and assess them using the statistical models and then calculate the OMOE. Five combat system configurations with their respective OMOE are shown in Table 23.

Table 23. Different Combat System Configurations with OMOE Calculated from Individual MOE Models

Variables		Combat System Configurations				
		Config1	Config2	Config3	Config4	Config5
Sonar	Frequency (kHz)	5200	5200	5200	8600	5200
	Power (kW)	60	48	48	60	90
	Diameter (m)	0.85	0.85	0.85	0.85	0.85
	High (m)	1.22	1	1.22	1.22	1
Torpedoes	Number	4	4	4	4	4
	Speed (kt)	28	45	28	45	35
Radar	Antenna Diameter (m)	2	2	3	3	3.5
	Power (kW)	180	160	180	150	90
	Frequency (GHz)	9.5	5.2	2.5	2.5	9.5
SAMs	Number	12	12	12	18	18
	Speed (m/s)	680	680	680	680	680
	Max Range (km)	40	40	40	30	30
Gun	Max Range (km)	12	16	16	12	16
	Proj Speed (m/s)	880	925	925	880	925
	Fire rate (proj/min)	80	85	85	80	85
SSMs	Number	8	12	8	12	12
	Speed (m/s)	240	240	306	306	299
	Max Range (km)	135	135	135	135	135
Other	CWIS	Yes	No	Yes	No	Yes
	Decoys	Yes	Yes	Yes	Yes	Yes
	OMOE	0.590	0.608	0.574	0.623	0.665

As was done with those five configurations, any number of alternative combat system configurations could be assessed in a short time, without having to run the ExtendSim® software for each candidate configuration. In this example, configuration 5 has the highest OMOE.

H. SIMULATION COMMENTS

1. Variability in the Data

The maximum number of replications in each simulation was selected based on a trade-off between the acceptable simulation time and variations of the MOE between simultaneous runs. As shown in the next table, for OPSIT 1, each experiment took about two hours, which makes it very costly to increase the number of replications beyond

1000. To show the variability in the measured MOE for each OPSIT, one experimental point was selected for each RSM design, and five independent runs were made. Based on that data, statistics of the MOEs were determined at a 95% confidence interval and are presented in Table 25.

Table 24. Description of Selected Number of Replications per OPSIT and Example of the Resultant Variability in the MOEs.

	Number of Replications	Average Time to Run Each Experiment	Experiment Number	MOE
OPSIT 1	1000	2 hours	6	0.57125, 0.56731, 0.57508, 0.56728, 0.57000
OPSIT 2	1000	3 minutes	10	0.61692, 0.60717, 0.60350, 0.60808, 0.60942
OPSIT 3	5000	16 minutes	17	0.98840, 0.98600, 0.99500, 0.98900, 0.98620
OPSIT 4	1000	15 minutes	25	0.52575, 0.51942, 0.51478, 0.52296, 0.51429

As can be seen in Tables 24 and 25, the range of variation in the MOEs is relatively small. This variability has been incorporated into the design by including two center points in the RSM designs.

Table 25. Statistics Describing the MOE for Selected Design Points in each OPSIT

Statistics	*OPSIT1*	*OPSIT2*	*OPSIT3*	*OPSIT4*
Mean	0.5701833	0.6090167	0.98892	0.519437
Standard Error	0.0014475	0.0022056	0.0016305	0.002241
Median	0.57	0.6080833	0.9884	0.519415
Standard Deviation	0.0032367	0.004932	0.0036458	0.00501
Sample Variance	1.048E-05	2.432E-05	1.329E-05	2.51E-05
Kurtosis	0.1732582	2.2119757	2.5702884	-2.22159
Skewness	0.8662253	1.1047034	1.5441775	0.190249
Range	0.0078056	0.0134167	0.009	0.011458
Minimum	0.5672778	0.6035	0.986	0.514291
Maximum	0.5750833	0.6169167	0.995	0.525749
Sum	2.8509167	3.0450833	4.9446	2.597187
Confidence Level(95.0%)	0.0040189	0.0061238	0.0045269	0.006221

2. Aspects to Improve in the ExtendSim® Models

Even though a great effort has been made to represent all of the physical phenomena taking place in the OPSITs, there are some things to do in future work to improve the models. They are as follows:

- Incorporate different configurations of unmanned vehicles in the functions performed by the combat system, primarily in the sensing functions, to assess their effect in the OMOE.
- Remove assumptions related to neglecting reception and transmission losses, as well as atmospheric attenuation, in the radar detection model.
- Model the different variables in the integration of weapons and sensors, with the fire control system.
- Incorporate helicopter use in the OPSIT models, where appropriate.
- Incorporate tracking radars, thermo-optical sensors, and ECM and ESM effect in models.
- Develop cost models for all the variables and incorporate them in order to make possible trades-off between effectiveness and cost.
- Develop weight and power models based on the variables and use them as constraints in the optimization process.
- Incorporate options for multiple radars and sonar, as well as different operational modes in each sensor.
- Model the interaction of more than one PES ship, or a PES ship with another friendly unit developing the same mission.

THIS PAGE INTENTIONALLY LEFT BLANK

V. RISK AND COST CONSIDERATIONS

A. RISK MANAGEMENT

1. Definition of Risk and Risk Management

Risk is defined by [34] as "a measure of the probability and consequence of not achieving a defined project goal" and risk management as "the act or practice of dealing with risk."

Risk is broadly accepted as a consequence of uncertainty during the life cycle of any system or project. Uncertainty comes from the unknown political and operational environment, threats, changes in technology, availability of resources, and other possible variables. While uncertainty cannot be eliminated, it can be reduced by "clarifying the probability of occurrence of the risk, understanding the consequences or alternatives if the risk event happens, and determining what drives the risks, i.e., the factors that influence its magnitude or likelihood of occurrence" [35].

The idea of this section is to look toward incorporating risk considerations within the conceptual design of the PES combat system, to identify sources of risk, and find ways to manage it.

2. Classification of Risks

Risks are classified by [36] in five categories: 1) technical risk, which includes the identification of the key performance parameters (KPP) and their correct specification in the contract, changes in technology, design issues, and production issues; 2) schedule risk, which represents the risk of failure to meet the schedule; 3) cost risk, the risk of failure to meet cost goals; 4) market risk, related to the availability of the goods needed to produce the system; and 5) other risks, which include excessive personnel turnover and data inaccuracy.

3. Risk Management Process

The authors of [35] present a five step model, which they assert has mitigated losses in many defense communication equipment and manufacturing projects. The five

steps, presented in Figure 52 are as follows: 1) identify risks; 2) analyze risks; 3) prioritize and map risks; 4) resolve risks; and 5) monitor risks.

The goal of the first step is to generate a broad list of risks, with an associated time component (i.e., when the risk event could take place) and impact assigned to each. In the second step, each risk is analyzed to identify the drivers for the risk, and to estimate the probability that the risk event will take place. As for the impact of the risk event, the aforementioned estimates are used to predict the expected loss (i.e., the mean loss associated with the risk) as seen in Equation 15:

Probability of Risk Event (P_e) x Total loss (L_t) = Expected loss (L_e) (15)

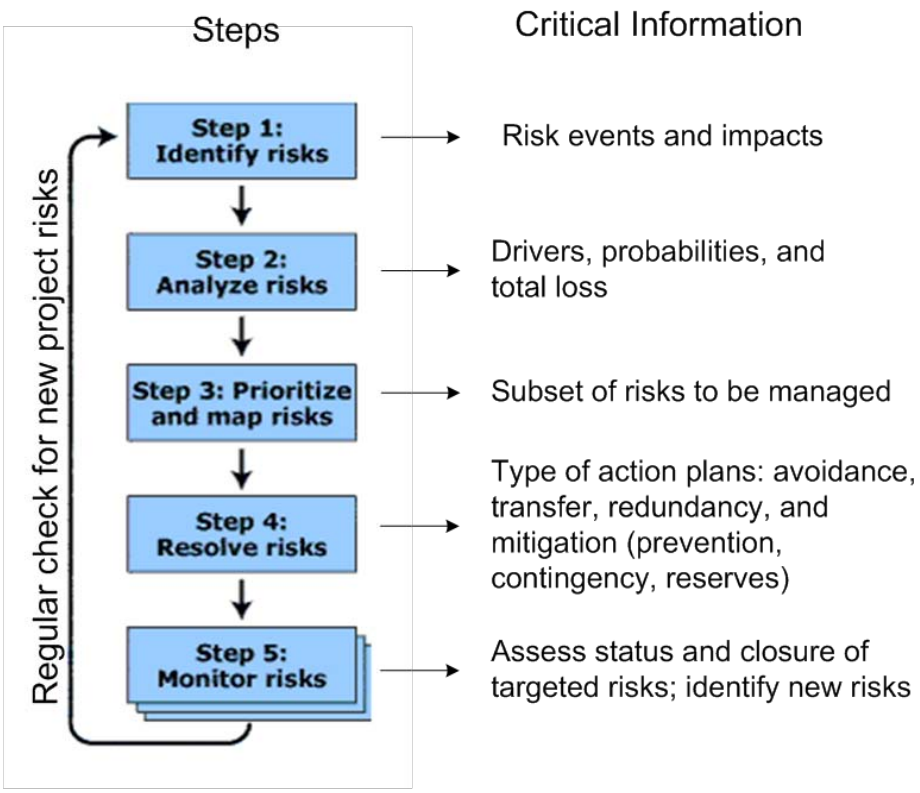

Figure 52. Risk Management Process. From [35].

In the third step, the expected loss is used to compare and prioritize risks, which allows planners to proactively manage a smaller selection risks. The purpose of this

decision is to concentrate the resources on the risks that could cause more serious damage to the project. The fourth step develops an action plan for each risk selected in Step 3. Response options could include a focus on the risk event itself (e.g., transfer and redundancy) or a focus in the risk drivers (e.g., avoidance and mitigation). The last step is to monitor project risks. This ensures the action plans make the desired progress. Changes that may affect the action plan or generate new risks to manage are also monitored.

4. PES Combat System Risks and Opportunities Discussion

One of the first risks that should be addressed in any the ship building project that of cost overruns. This risk is common to most projects of this kind. The U.S. Navy's shipbuilding illustrates this point. As indicated by [37], cost overrun was commonplace for the last ten first-in-class surface ships built. Of those ships, only two had overruns less than 20%. The rest of the overruns ranged from 40% to more than 100%. The solution requires greater effort in cost estimation (which necessitates a great deal of historical cost data up front). The solution also requires a better effort at the beginning of the project to establish an agreement among all stakeholders and decision makers in the scope that defines the expected capabilities. This will prevent changes in the scope that might later add risks to the project.

Technological maturity is another important consideration. The latest technology available is always desired, but the risk of incorporating technology that is not proven or ready when the design begins should be considered. To reduce the impact if the new technology is not ready when expected, some alternatives should be incorporated into the system design.

Complexity is another important issue that not only increases risk, but also cost. According to Dick Coleman[2] after a conference to the summer 2009 Cost Estimation

[2] U.S. Navy retired captain, former director of Naval Center for Cost Analysis. He is now director of the Northrop Grumman Cost/Price Analysis Center of Excellence.

NPS class, the size of the ship is the main driver of the cost escalation in ship acquisition. “The displacement of ships is growing an average of 3% every year inside each class,” he said.

This increase in size (due to an increase in complexity) has definitely reduced the U.S. Navy’s ability to buy more ships because of the increase in unitary ship cost. Table 26 shows some ship class representatives and their increase in displacement. This phenomenon is not exclusive to the U.S. Navy. As can be seen in Table 27 U.K. ships have experienced this kind of grouth, with an average of more than 55% for the types of ship analyzed.

Table 26. Representative Ship Class Displacements. From [38].

Decade	*Destroyers*		*Cruisers*		*Submarines*	
1940–49	Fletcher	3,050 tons	Baltimore	16,000	Gato	1,525
1950–59	Sherman	4,050	–	–	Skate	2,570
1960–69	Adams	4,500	Belknap	7,930	Sturgeon	4,246
1970–79	Spruance	7,800	Virginia	11,000	Los Angeles	6,080
1980–89	–	–	Ticonderoga	8,910	–	–
1990–99	Burke	8,300	–	-	Sea Wolf	8,060

Table 27. Generational Growth in U.K. Platform Size. From [39].

Class	Displacement	Class	Displacement	Class	Displacement
Type 21 Frigate	3300 tonnes	Type 42 Destroyer	5200 tonnes	Trafalgar SSN	5200 tonnes (dived)
Type 22 Frigate	5300 tonnes (+60%)	Type 45 Destroyer	7350 tonnes (+40%)	Astute SSN	7800 tonnes (dived) (+50%)
Class	**Displacement**	**Class**	**Displacement**	**Class**	**Displacement**
Fearless LPD	11,582 tonnes	Island Class OPV	1260 tonnes	Resolution SSBN	8500 tonnes (dived)
Albion LPD	18,500 tonnes (+60%)	River Class OPV	1677 tonnes (+33%)	Vanguard SSBN	15,980 tonnes (dived) (+90%)

In fact, [40] states: "Our statistical analysis found that light ship weight (LSW)[2] and power density (i.e., the ratio of power generation capacity to LSW) correlated most strongly with ship costs." But it is not the cost of steel or generators that make ships more expensive, but rather the systems they carry. Therefore, the driver that is behind the size of ship (displacement) and power density is the complexity of systems that makes today's ships more capable than their former versions. To accomplish more missions, more systems have been added to ships, and these ships have been designed bigger to support those loads. As an example of this trend, Figure 53 shows the increase of weapons system complexity for U.S. surface combatants from 1960–2000.

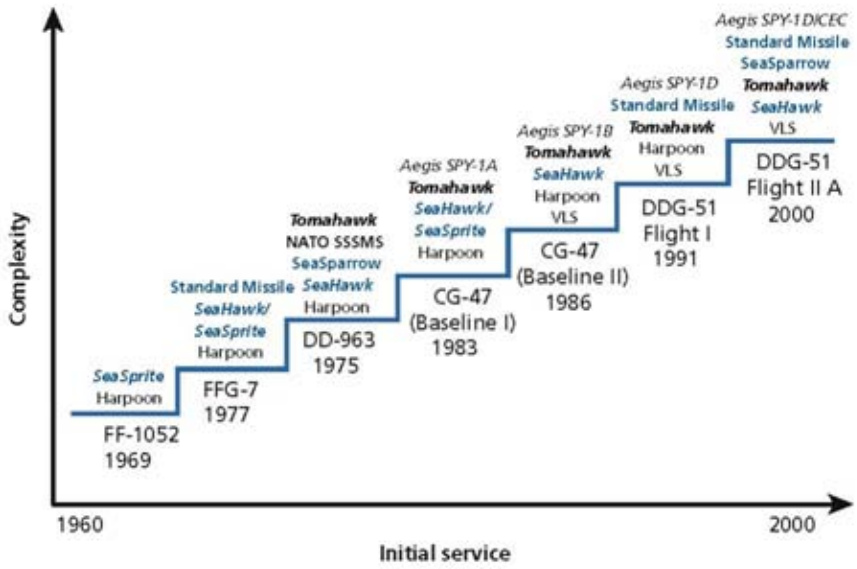

Figure 53. An Example of Increasing Complexity of Weapons Systems for Surface Combatants. From [40].

Figure 54 shows the effect of complexity for additional capabilities for FFG-7, which was constructed between 1973 and 1984. Since the cost was divided between basic shipbuilder costs, electronics costs, and ordnance costs changes, it can be seen that while the basic and ordnance costs remained relatively stable in the time period, the cost of electronics increased more than five times as a result of expanding the roles of the ship class.

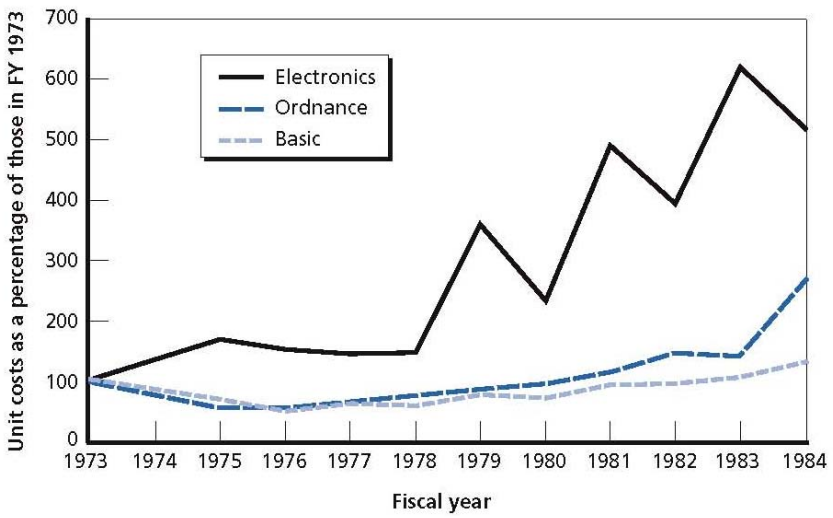

Figure 54. Components Escalation for the FFG-7 Class. From [40].

To avoid potential overruns and cost escalation risk, mission focused ships should be produced, rather than multi-mission vessels. In other words, smaller ships, with fewer capabilities need to be made and have a greater number ships made within the same budget. With more ships, the fleet can achieve an overall higher level of efficiency. More specialized or mission focused ships are less complex. This reduces the integration effort and the overall technological risk of the project. Additionally, the cost of the ship is cut down, which allows for an increase in the size of the fleet. Smaller vessels have many advantages over the bigger ones. In addition to the reduced cost of acquisition, it is easier to reduce signatures, improve maneuverability, and as they are smaller and require less manning, it reduces the cost of operation, support and maintenance.

There is also within this project the opportunity to make indigenous developments as part of the combat system project. As an example, low cost missiles are available in the international market. These could be upgraded at relatively low cost. Even the cost of building the missiles, if the appropriate knowledge is acquired, could be relatively low. New Zealand engineer Bruce Simpson tried to prove this, as documented by [41]. The attempted to build, by himself, a cruise missile for under $5.000, but was stopped by local authorities. The importance of being able to produce missiles is evidenced in Chapter IV. The number of missiles is one of the variables with a higher impact on

mission effectiveness, in both surface warfare and anti-air warfare scenarios. Thus, even if this decision carries a high risk, increasing the number of missiles within the same budget and the resulting gain in mission effectiveness makes it worth the risk.

5. Technical Risk Evaluation

The uncertainty associated with not achieving the technical specifications, over the respective MOEs, could be analyzed with the simulation feature of JMP®. As a case study, OPSIT 3 is analyzed with configuration No. 3 (see Table 23). The uncertainty about the final frequency is represented with a normal distribution, with the mean equal the design frequency (i.e., 5.2 kHz) and standard deviation of 500 Hz. In the same way, the transmission power is represented with a distribution, with mean value equal to the design power (i.e., 48 kW) and standard deviation of 2 kW, as represented in Figure 55. The other factors are assumed to be fixed values, since the designers have greater control over them. The effect of that uncertainty is shown in the histogram in Figure 56, where the MOE ranges from nearly 0.8 to 1.

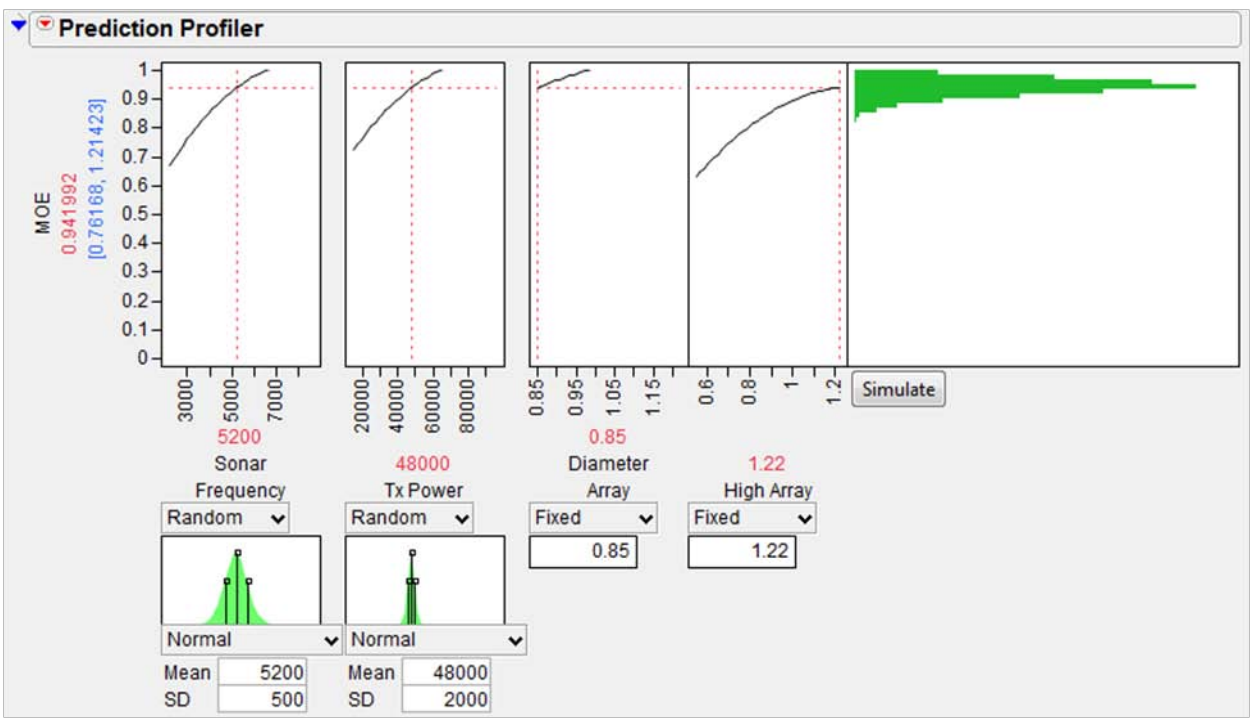

Figure 55. Using JMP® Simulator to Assess Technical Risk

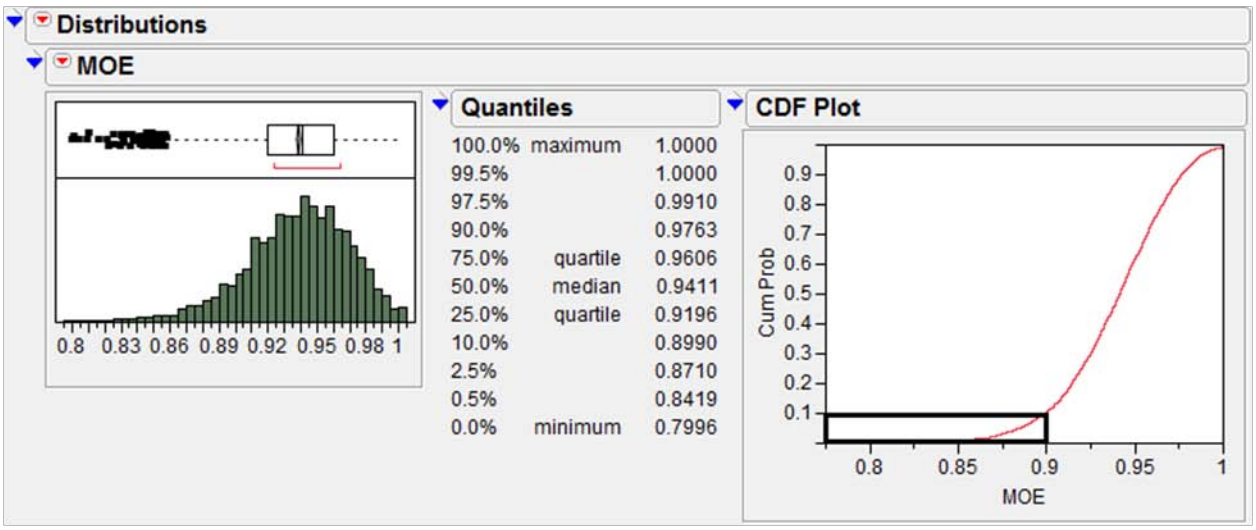

Figure 56. Example of the Determination of CDF for the MOE

When the variables are considered fixed input parameters, the MOE for this configuration is calculated to be equal to 0.942. With random parameters that represent the uncertainty in achieving the design power and frequency of the sonar, the expected MOE is 0.9411, but it can be as low as 0.7996. The Cumulative Distribution Function (CDF) plot shows that there is a risk of 10% of achieving less than 0.9 in the MOE (assuming that is the requirement for that OPSIT). This can be deduced from the CDF in Figure 56. This value is then a quantitative input to the risk management process.

The same analysis as outlined above can be performed on other variables that have uncertainty in their final value, to assess the risk of not achieving the requirements.

B. INCORPORATING COST AND OTHER CONSTRAINTS AS MODEL RESPONSES

The MOE is not the only constraint designers and decision makers face when choosing a combat system configuration. It would be also helpful in early stages of the project to be able to constraint the design to the available payload weight, volume, power consumption, and cost. Having enough data about those parameters, a regression analysis can be generated and develop models allowing the prediction of their value for the complete design space.

As an illustration related to cost: from the different techniques for cost estimation (analogy, parametric, engineering build-up), parametric costing or cost estimating relationships (CER) are useful for the conceptual and design phases, as presented in Table 5.1 of [42].

This technique relies in historical data, and the identification of the variables that drive the cost. Then, regression analysis is performed with the data, to express the cost as a result of those variables.

The accurate cost data of weapons and sensors is limited to what is contained in open source literature. In this case study, from the five data points available (Table 28), it is possible to develop a cost estimation relationship (CER) to predict the cost of sonar.

Table 28. Available Data for CER of Sonar Configurations.

Sonar System	Frequency (kHz)	Power (kW)	High	Diameter	Cost (U$) Million	Year	Cost(U$2010) Million
SQS-56	7.50	36.00	0.97	1.21	4.5	1988	7.2054
Type 2050 (UK)	6.00	44.00	1.58	1.82	5.0	1990	7.3875
sqs-53b	3.00	190.00	1.60	4.80	6.3	1987	10.38996
Wesmar SS 395	100.00	1.00	0.60	0.20	0.0016	2010	0.00164
SX 90	25.00	3.00	0.44	0.38	0.2290	2010	0.229

From the several models used (linear, exponential, logarithmic) with one, two or three variables, using the least square method, the best model statistically was a logarithmic model, using power as the only input variable. The model is seen in Equation 16:

$$\text{Cost (U\$2010 Million)} = 2.1539 \times \text{Ln(Power[kW])} - 0.8647 \quad (16)$$

In fact, Figure 57 shows a good fit between the model and the available cost data. With this CER, one can predict the cost of the different sonar alternatives studied in the RSM of OPSIT 3 and introduce it as a response in JMP®.

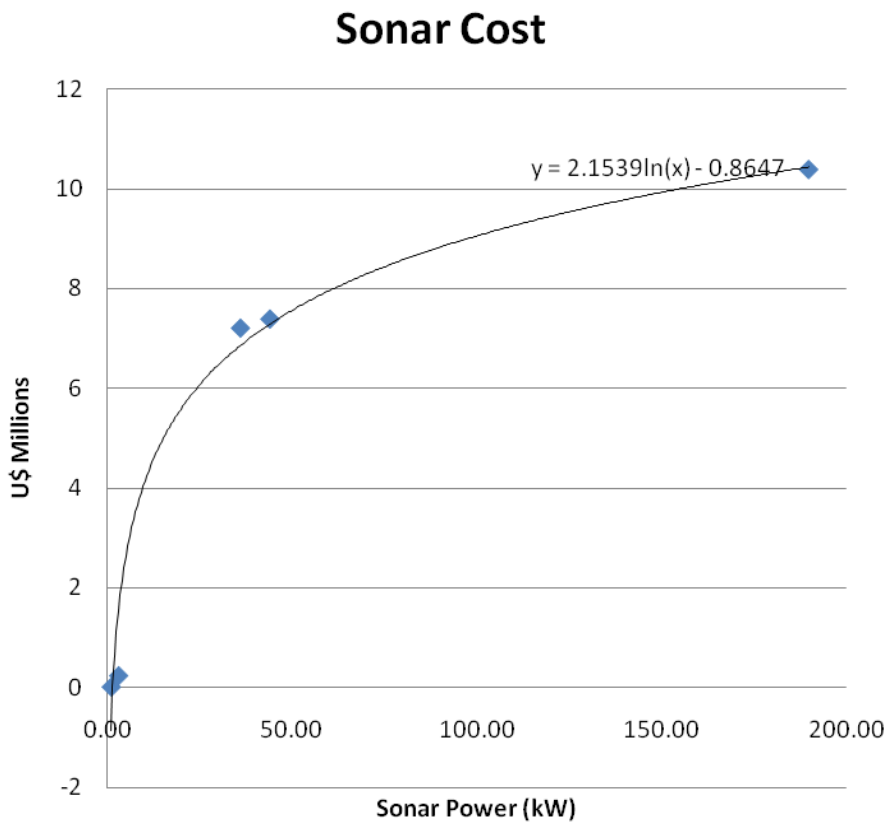

Figure 57. CER for Sonar Cost

Following the same case study analyzed in the previous section (i.e., OPSIT 3, configuration No. 3), a cost limit of 6.5 million has been added to the contour profiler, presented in Figure 58.

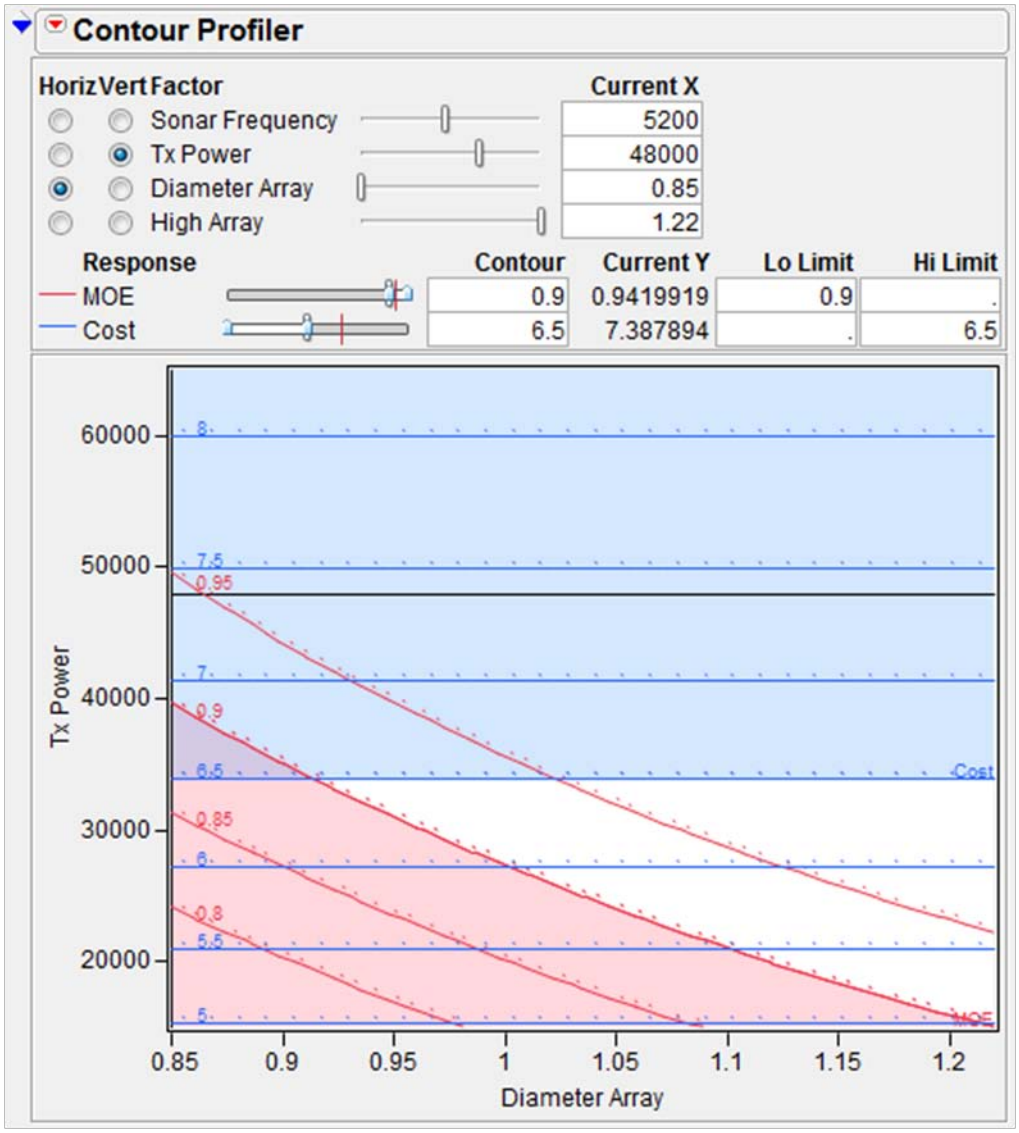

Figure 58. Contour Profiler for MOE and Cost of the Sonar System: Transmission Power vs. Diameter of the Array

Thus, from the contour profiler, it can be easily identified that the initial power considered in the combat system configuration (i.e., 48 kW) is outside the feasible region. However, there are feasible options (the white area in the plot) below 34 kW that fulfill both the cost and performance constraints, if the diameter of the array is increased.

As illustrated with cost, similar procedures could be developed, if the average power consumption, weight, and volume data is available, to analyze those factors in each model and predict those values for all possible combinations of combat systems. In

such a manner, power consumption, weight, and volume could be limited based on naval architects' input and in this way arrive at a design that satisfies all the constraints.

The sum of these techniques provides the quantitative basis for an optimal design. For decision makers, it provides a way to assess the performance of candidate combat system configurations and to better arrive at a decision that satisfies all the constraints.

VI. CONCLUSIONS AND RECOMMENDATIONS

A. SUMMARY

This work has set up the basis for the conceptual design of the PES ship's combat system, in a way that considers the impact of the system components' variables on the overall warfighting effectiveness of the ship. The use of this methodology allowed for identification of the highest possible effectiveness for the mission of the ship within the given constraints of cost, risk, and platform limitations.

B. CONCLUSIONS

The separation of the combat system from the platform simplifies the problem of surface combatant ship design. Once a combat system with the highest overall effectiveness is selected, the payloads are identified and the platform is designed around the combat system needs and the other top level requirements.

The DRM is useful for characterizing the environment, threat, and general condition in which the intended combat system will perform, and in this way it provided the basis for modeling and simulation.

Combat systems design requires taking into account several approaches and determining the most effective solution. However, real systems prototyping, when related with complex and/or large systems, is usually a prohibitively expensive way of analyzing the alternative solutions. Moreover, real life testing of different options can be undesirable, given the amount of resources required for those activities. As such, modeling and simulation is a very effective way to research and assess different solutions to fulfill the needs of the design.

With the use of DOE and RSM techniques within the SAS JMP® software, the analysis of the data obtained from simulations is simplified, while the total amount of simulation time is reduced. This allows for identification of the important factors for each

MOE, and for the identification of feasibility regions for the combat system. This allows resources, power, weight, and volume to be focused in a way that optimizes the ship design. The contour plot display of the varying characteristics of the combat system to decision makers allows them to see the results of their varying design variables on MOE.

C. RECOMMENDATIONS

Based on the finding of this work, the following steps are suggested as a way of expanding the options for the design, simplifying the feasibility assessment and decision making process, and improving the accuracy of the modeling:

- Improve the ExtendSim® models incorporating within the simulation the possibility of unmanned systems, helicopters, interaction with friendly units, and other sensors as described in section H.2 of Chapter IV.
- Develop cost models for all the systems present in the design in order to allow trades-off between cost and overall effectiveness.
- Develop weight and power models based on the variables, to use as constraints in the optimization process.
- Develop new OPSITs that cover other important operational tasks with which the Colombian Navy is concerned, as related to detection and interdiction of Go-fast boats and semisubmersibles used for the traffic of narcotics.
- Employ the simulation models to study the comparative effectiveness of having specialized ships for each mission versus multi mission vessels.
- Combine the combat system models to total ship design synthesis models to determine overall ship characteristics for decision making.

APPENDIX A: CHARACTERIZATION OF SENSORS AND COMBAT SYSTEMS

Table 29. Selected Surface Combatants

Class	Countries	Displacement	Radar	Sonar	Electronic Warfare	Decoys	Guns	CWIS	SAM	SSM	Torpedoes
Frigates											
Adelaide	Australia	4200 Ton	SPS-49 A(V)1; SPS-55	Spherion UMS 4131; TMS 5424; Albatros (TMS 4350)	Elbit EA-2118 jammer. Rafael C-Pearl	SRBOC Mk 36; 4 Nulka quad 2 chaff rocket launchers	1 Oto Melara 76/62	1 GE/GDC 20 mm Mk 15 Vulcan Phalanx	GDC Pomona SM-2 Block IIIA	8 Harpoon Block 2	2x3 324 mm Mk 32; Eurotorp MU 90
Anzac (Meko 200)	New Zeland, Australia	3700 Ton	SPS-49(V)8; 9LV 453 TIR	Thomson Sintra Spherion B Mod 5	(ESM) DASA Maigret; Racal Centaur	2 Loral Hycor Mk 36 Mod 1; SLQ-25A torpedo decoy system	1 - 5 in/54 Mk 45 Mod 2	1 Vulcan Phalanx 6 barrelle d Mk 15 Block 1	8 Sea Sparrow RIM-7P	2x4 Harpoon	6 Mk 46 Mod 2
Barbaros (Meko 200)	Turkey	3100 Ton	AWS 9; AWS 6 Dolphin	SQS-56	Racal Cutlass, Racal Scorpion	Mk 36	1 - 5 in/54	3 Sea Zenith	8 Sea Sparrow PDMS	84 Harpoon	6 Mk 46 Mod 5

Class	Countries	Displacement	Radar	Sonar	Electronic Warfare	Decoys	Guns	CWIS	SAM	SSM	Torpedoes
Formidable	Singapore	3100 Ton	Herakles 3-D; 2 Scanter 2001	EDO 980 ALOFTS VDS	C-Pearl-M	3 NGDS 8-barrelled chaff; torpedo decoys	1 Oto Melara 76 mm/62 Super rapid; 2 20 mm	No	32 Eurosam SAAM	8 Harpoon	6 A 244/S Mod 3
Freedom (LCS)	US	3000 Ton	TRS-3D	AN/SQR-20	ST WBR-2000 ESM	2 SKWS/SRBOC	1 - 57 mm/70 Mk 2	No	21 RIM-116	45 NLOS-LS	No
Fremm	France, Italy, Morocco	4500 Ton	Herakles 3-D	Thales TUS 4110CL	ARBR 21	2 EADS NGDS 12-barrelled chaff; Antitorpedo decoys.	1 Oto Melara 76 mm/62 Super Rapid	Unknown	16 (2 octuple) cell Sylver A43 VLS for MBDA	8 MBDA MM 40 Exocet Block III	2x3 324 mm (2 B 515) tubes; Eurotorp Mu-90
Halifax	Canada	4700 Ton	SPS-49(V)5; HC 150	SQS-510; SQR-501	SLQ-501; SRD 502; AN/ULR 501; SLQ-503	4 Shield Mk 2 launchers; SLQ-25; towed acoustic decoy	1 Bofors 57 mm/70 Mk 2	1 20 mm Vulcan Phalanx Mk 15 Mod 1	16 RIM-162	8 Harpoon Block 1C (2 quad)	4 Mk 46 Mod 5
Independence (LCS)	US	2790 Ton	Sea Giraffe	VDS	ES-3601 ESM system.	4 SRBOC 6-barrelled	1 - 57 mm/70 Mk 2	No	11 RIM-116B	45 NLOS-LS	No

Class	Countries	Displacement	Radar	Sonar	Electronic Warfare	Decoys	Guns	CWIS	SAM	SSM	Torpedoes
Karel Doorman	Netherlands, Belgium	2800 Ton	SMART 3D; LW08; Scout; 2 STIR	Signaal PHS-36; Anaconda DSBV 61	APECS II (includes AR 700 ESM)	2 SRBOC 6-Mk 36 quad launchers; SLQ-25 Nixie	Oto Melara 76 mm/62 compact Mk 100; 2 LIW DPG 35 mm	1 SGE-30 Goalkeeper 30 mm	16 RIM 7P	8 Harpoon Block 1C (2 quad)	2 Mk 46 Mod 5
Lekiu	Malaysia	1845 Ton	DA08; Sea Giraffe 150HC	Sintra Spherion	Telefunken; Mentor	2 Super Barricade 12-barrelled; Sea Siren torpedo decoy.	1 Bofors 57 mm/70 SAK Mk 2; 2 MSI 30 mm/75 DS 30B	No	16 Seawolf	8 MM 40 Exocet Block II	6 Sting Ray
Neustrashimy	Russia	3450 Ton	Top Plate 3D; Cross Dome	Ox Yoke and Whale Tongue	2 Foot Ball; 2 Half Hat; 4 Half Cup laser intercept	8 PK 10 and 2 PK 16 chaff launchers	1 - 3.9 in/59 A 190E	2 CADS-N-1	32 SA-N-9	16 SS-N-25	6 SS-N-15/16 missiles with Type 40 torpedoes
Oliver Hazard Perry	US	4100 Ton	SPS-49(V); SPS-55	SQQ 89(V)2 (Raytheon SQS 56 and Gould SQR 19)	SLQ-32(V)2	2 SRBOC 6-barrelled Mk 36 ; Mk 53 Nulka decoys. T-Mk 6 Fanfare/SLQ-25 Nixie	1 Oto Melara 76 mm/62 Mk 75	1 20 mm/76 Mk 15 Block 1B Vulcan Phalanx	Removed	Removed	6 Mk 46 Mod 5

Class	Countries	Displacement	Radar	Sonar	Electronic Warfare	Decoys	Guns	CWIS	SAM	SSM	Torpedoes
Shivalik	India	4600 Ton	Revathi; Top Plate (Fregat-M2EM)	Bharat HUMSA	Bharat Ajanta; ASOR (TK-25E-5)	2 PK 2	2 Oto Melara 76 mm/62 Super Rapid	2 - 30 mm AK 630	6 SA-N-7 Gadfly; 8 Barak 1	8 SS-N-27	6 ILAS 3 launcher
Sword (F-22P)	Pakistan	2500 Ton	Type 517 Knife Rest; Type 363 Seagull S	DSQS-23BZ	N/A	N/A	1 - 76 mm AK 176M	2 - 30 mm Type 730B	8 SA-N-4	8 C-802	6 ET-52C
Type 054A	China	3500 Ton	Top Plate (Fregat MAE-3) ; Type 364 Seagull C	MGK-335	Type 922-1; HZ-100 ECM & ELINT	2 - 24 barrelled launchers	1 - 76 mm	2-30 mm Type 730A (7 barrels)	32 HHQ-16	8 C-802 (YJ-83/CSS-N-8 Saccade)	6 Yu-2/6/7
Valour (Meko A-200 SAN)	South Africa	3590 Ton	MRR 3D; 2 RTS 6400	Thomson Marconi 4132 Kingklip	SME 100/200 ESM & ELINT	2 Super Barricade chaff launchers	1 Otobreda 76 mm/62 compact; 2 LIW DPG 35 mm	2 Oerlikon 20 mm Mk 1	Denel Umkhonto 16 cell VLS	8 Exocet MM 40 Block 2	4 torpedo tubes

Class	Countries	Displacement	Radar	Sonar	Electronic Warfare	Decoys	Guns	CWIS	SAM	SSM	Torpedoes
Corvettes & OPVs											
Abu Dhabi (Comandante)	United Arab Emirates	1650 Ton	Kronos 3D; SIR-M	CAPTAS Nano	SLQ-747	Chaft launchers	1 Otobreda 76 mm/62 Super Rapid; 2 Oto Melara Marlin 30 mm	No	No	4 MBDA Exocet	N/A
Al Shamikh	Oman	2700 Ton	SMART-S Mk 2	N/A	Vigile 400	Rheinmetall MASS	Oto Melara 76/62 Super Rapid	2 DS 30M Mk 2 30 mm	No	12 MM40 Block 3	N/A
Baynunah	United Arab Emirates	830 Ton	Sea Giraffe; Scanter 2001	L-3 ELAC Nautik NDS 3070 mine avoidance sonar	SLR 736; DRS Z S 405	2 Rheinmetall MASS-2L launchers	1 OTO Melara 76 mm/62 Super Rapid; Rheinmetall MLG 27 mm	No	8 RIM-162; 21 RIM-116B	8 MBDA MM 40 Block III	No
Braunschweig K130	Germany	1840 Ton	TRS-3D	No	EADS UL 5000K	2 Rheinmetall MASS; decoy launchers	1 Otobreda 76 mm/62; 2 Mauser 27 mm	No	42 RIM-116	4 Saab RBS-15 Mk 3	No

Class	Countries	Displacement	Radar	Sonar	Electronic Warfare	Decoys	Guns	CWIS	SAM	SSM	Torpedoes
Kamorta	India	2400 Ton	Revathi 3-D	HUMSA-NG	BEL's Sanket system	4 CSN-56	OTO Melara 76 mm/62	2 AK-630M	Barak 1	No	2x2 improved DTA-53 533 mm
Milgem	Turkey	1500 Ton	SMART-S Mk2	Sonar 2170, Sea Sentor	N/A	TBA; Ultra Sea Sentor	1-3 in (76 mm)	No	21 RIM-116	8 McDonnell Douglas Harpoon	4-324 mm
Sa'ar 5	Israel	1075 Ton	EL/M-2218S; SPS-55	EDO Type 796 Mod 1	Elisra NS 9003; Tadiran NATACS; 2 Rafael 1010; Elisra NS 9005	3 chaff and IR launchers; ATC-1 towed torpedo decoy.	OTO Melara 76 mm/62 compact	2 Sea Vulcan 20 mm	64 Barak I	8 McDonnell Douglas Harpoon (2 quad)	6 Honeywell Mk 46
Visby	Sweden	620 Ton	Sea Giraffe AMB 3D; Scanter 2001	Hydra Suite	Condor Systems CS 3701	MASS-HIDD	1 Bofors 57 mm/70 SAK Mk 3	No	No	8 RBS 15 Mk II (Batch 2)	Type 45

Table 30. Radar Systems Parameters

Radar System	Antenna Diameter (m)	Power (kW)	Central Frequency (GHz)	Bandwidth (kHz)
AW 9 (Type 996)	N/A	80	3	N/A
Cross Dome (MR-52)	3	N/A	3	N/A
DA08	N/A	145	3.5	N/A
EADS TRS-3D	0.8	N/A	5	N/A
EL/M-2208	1.6	25	9.4	N/A
Herakles	N/A	N/A	3	N/A
Kronos 3D	1.41	N/A	6	N/A
LW08	N/A	150	1.5	N/A
MRR 3D	N/A	N/A	5	N/A
Revathi	2.4*	N/A	3	N/A
Scanter 2001	0.8*	30	3.05	N/A
Scout	1.8	1 (20 equivalent)	9	N/A
Sea Giraffe HC 150	N/A	60	5	N/A
Smart S Mk2	3.24	145	3.5	N/A
SPS-49	6.3	360	0.9	1.2 MHz & 12 MHz
SPS-55	1.13*	130	9.5	1.2 MHz & 10 MHz
STIR	1.8	220	9.5	N/A
Top Plate (Fregat MAE-3)	1.7	45	2.5	N/A
Top Plate (Fregat-M2EM)	3.78	90	2.5	N/A
Type 363 Seagull S	4.54	60	3	N/A
Type 364 Seagull C	N/A	N/A	5	N/A
Type 382	N/A	N/A	N/A	N/A
Type 517 Knife Rest	N/A	100	0.072	N/A

N/A: (Information not available)

* : (Estimates based on antenna gain or graphic information)

Table 31. Sonar Systems Parameters

Sonar System	Array Type	Frequency (kHz)	Power (kW)	Length	Diameter	High
Spherion Mk III/UMS 4131	Spherical	5.5, 6.5, 7.5	N/A		1.16	
SQS-56	Cylindrical	7.5	36		1.21	0.965
980 ALOFTS	Linear	1	N/A	222.5		
UMS 4110CL	Cylindrical	4.5	96 (2x48)		N/A	N/A
SQS-510	Cylindrical	2.2 - 8.6	N/A		1.22	1.22
PHS-36	Cylindrical	5.5, 6.5, 7.5	N/A		N/A	N/A
Ox Yoke	Cylindrical	N/A	N/A		N/A	N/A
HUMSA (MG-345)	Cylindrical	6.5, 7, 7.5	N/A		N/A	N/A
UMS 4132 (Kingklip)	Cylindrical	5.52 - 8	N/A		1.2	1.13
NDS 3070	Planar	30, 70	N/A	0.388		0.549
Type 796 Mod 1	Cylindrical	7	N/A		N/A	N/A
CAPTAS nano (UMS 4320)	Cylindrical	0.9 - 2	N/A		N/A	N/A
SS-105	Circular	14	15		0.85*	

Table 32. SSM Parameters

	Number	Speed (m/s)	Max Range (Km)	RCS (m2)*	Flight Altitude (m)
Harpoon	4, 8, 12	240	124	0.08392	7 - 20
NLOS-LS	15,30,45	108	50	0.01939	N/A
MM-40 block 3	8	306	180	0.09335	8 - 30
SS-N-25	4,8,12,16	299	130	0.14325	10 - 15
SS-N-27	4,8,12,17	238	220	0.2236	5
C-802 Saccade	8	~476	120	0.1118	10 - 30
RBS-15 Mk 3	4,8,12	272	200	0.19685	N/A

*RCS estimated using Mie series solution for a perfect sphere [43] at the assumed Red Radar Frequency (3.5 GHz)

Table 33. SAM Parameters

	Number	Speed (m/s)	Max Range (Km)
Barak 1	32, 64	680	12
GWS-26	16, 32	680	6
RIM-116	21, 42	680	20.4
RIM-162	11, 16, 22, 32	1360	45
RIM-7P	8, 16, 24, 32	850	16
SAAM (Aster 15)	8, 16, 21, 24, 32	1000	30
SA-N-4	8,16,32	N/A	15
SA-N-7	8,16,32	1020	30
SA-N-9	8,16,32	850	12
SM-2	24, 40, 44, 64	1020	240.8

Table 34. Gun Parameters

GUN	Max Range (Km)	Proj Speed (m/s)	Fire Rate (Proj/min)
A 190E (3.9in/59)	12	880	80
Mk 45 (5in/54)	12.39	807	20
Mk2 (57mm/70)	17	1035	220
Oto Melara 76/62	15.75	900	59
Oto Melara 76/62 Compact	16	925	85
Oto Melara 76/62 Super Rapid	16	925	120

Table 35. Torpedo Parameters

Torpedo	Number	Warhead (kg)	Batery Life (min)	Speed (kt)	Range (km)
Eurotorp MU 90	3, 6	123*	25.7	29	23
Mk 46	3, 4, 6	44.45	7.9	45	11
A244/S Mod 3	3, 6	42	15.6	28	13.5
ET-52C	3,6	34	6.5	35	7
Sting Ray	3, 6	45	8.0	45	11.11
* 32 kg TATB equivalent to 123 kg TNT					

THIS PAGE INTENTIONALLY LEFT BLANK

APPENDIX B: SUMMARY OF EXPERIMENTS

Table 36. Screening Design for OPSIT 1

	Sonar Frequency (Hz)	Tx Power (W)	Diameter Array (m)	High Array (m)	#Torpedoes	Warhead (kg)	Torpedo speed (kt)
1	8600	15000	0.85	1.22	6	34	28
2	2200	15000	1.22	1.22	4	34	45
3	2200	15000	0.85	0.55	4	34	28
4	2200	96000	0.85	0.55	6	34	45
5	8600	96000	1.22	1.22	6	45	45
6	8600	96000	0.85	1.22	4	34	45
7	2200	96000	1.22	1.22	6	34	28
8	2200	96000	1.22	0.55	4	45	45
9	8600	15000	1.22	0.55	6	34	45
10	8600	96000	0.85	0.55	6	45	28
11	8600	15000	1.22	1.22	4	45	28
12	8600	96000	1.22	0.55	4	34	28
13	2200	15000	1.22	0.55	6	45	28
14	8600	15000	0.85	0.55	4	45	45
15	2200	96000	0.85	1.22	4	45	28
16	2200	15000	0.85	1.22	6	45	45

Table 37. Screening Responses for OPSIT 1

	Merchant Survivability	Pkill Submarine	PES Survivability	**MOE**
1	0.709417	0.014	0.368	0.36380567
2	0.705333	0.014	0.378	0.36577767
3	0.708833	0.005	0.362	0.358611
4	0.693333	0.011	0.383	0.36244433
5	0.739417	0.591	0.358	0.56280567
6	0.74825	0.599	0.344	0.56375
7	0.745583	0.669	0.301	0.571861
8	0.705917	0.017	0.401	0.374639
9	0.712917	0.013	0.349	0.35830567
10	0.71925	0.015	0.35	0.36141667
11	0.718583	0.014	0.336	0.35619433
12	0.714667	0.015	0.366	0.36522233
13	0.71075	0.004	0.339	0.35125
14	0.700583	0.004	0.374	0.35952767
15	0.74925	0.635	0.317	0.56708333
16	0.711583333	0.013	0.386	0.37019444

Summary of Fit

RSquare	0.999855
RSquare Adj	0.997826
Root Mean Square Error	0.004264
Mean of Response	0.413306
Observations (or Sum Wgts)	16

Analysis of Variance

Source	DF	Sum of Squares	Mean Square	F Ratio
Model	14	0.12542832	0.008959	492.7896
Error	1	0.00001818	0.000018	Prob > F
C. Total	15	0.12544650		0.0353*

Parameter Estimates

Term	Estimate	Std Error	t Ratio	Prob>|t|
Intercept	0.4133055	0.001066	387.73	0.0016*
Sonar Frequency(2200,8600)	-0.001927	0.001066	-1.81	0.3217
Tx Power(15000,96000)	0.0528472	0.001066	49.58	0.0128*
Diameter Array(0.85,1.22)	-4.859e-5	0.001066	-0.05	0.9710
High Array(0.55,1.22)	0.0518785	0.001066	48.67	0.0131*
#Torpedo(4,6)	-0.000545	0.001066	-0.51	0.6991
Warhead(34,45)	-0.000417	0.001066	-0.39	0.7628
Torpedo speed(28,45)	0.001375	0.001066	1.29	0.4198
Sonar Frequency*Tx Power	-0.000927	0.001066	-0.87	0.5443
Sonar Frequency*Diameter Array	-0.000698	0.001066	-0.65	0.6310
Sonar Frequency*High Array	-0.001618	0.001066	-1.52	0.3709
Sonar Frequency*#Torpedo	0.00075	0.001066	0.70	0.6097
Sonar Frequency*Warhead	-0.000976	0.001066	-0.92	0.5281
Sonar Frequency*Torpedo speed	0.0483437	0.001066	45.35	0.0140*
Tx Power*Diameter Array	0.0025278	0.001066	2.37	0.2541

Figure 59. Screening Model Statistics for OPSIT 1

Table 38. RSM Design for OPSIT 1

	Sonar Frequency	Tx Power	Array High	Torpedo Speed
1	8600	15000	0.55	45
2	8600	96000	0.55	45
3	5400	15000	0.885	36.5
4	5400	96000	0.885	36.5
5	8600	15000	1.22	45
6	5400	55500	0.885	36.5
7	2200	15000	0.55	28
8	8600	96000	1.22	45
9	2200	55500	0.885	36.5
10	5400	55500	0.885	45
11	8600	96000	0.55	28
12	5400	55500	0.885	28
13	5400	55500	1.22	36.5
14	8600	55500	0.885	36.5
15	2200	96000	1.22	28
16	5400	55500	0.885	36.5
17	8600	96000	1.22	28
18	2200	15000	1.22	28
19	5400	55500	0.55	36.5
20	8600	15000	0.55	28
21	2200	96000	0.55	45
22	2200	15000	0.55	45
23	2200	96000	0.55	28
24	8600	15000	1.22	28
25	2200	15000	1.22	45
26	2200	96000	1.22	45

Table 39. RSM Responses for OPSIT 1

	M1 Merchants Survivability	M2 Pkill Submarine	M3 PES Survivability	MOE
1	0.749166667	0.01	0.33	0.363056
2	0.6925	0.02	0.41	0.374167
3	0.739166667	0.03	0.31	0.359722
4	0.7425	0.64	0.38	0.5875
5	0.71	0.01	0.43	0.383333
6	0.7375	0.68	0.32	0.579167
7	0.736666667	0.02	0.37	0.375556
8	0.76	0.62	0.36	0.58
9	0.663333333	0	0.43	0.364444
10	0.785	0.64	0.34	0.588333
11	0.685	0.01	0.33	0.341667
12	0.716666667	0.6	0.36	0.558889
13	0.725	0.59	0.37	0.561667
14	0.725	0.02	0.4	0.381667
15	0.740833333	0.58	0.37	0.563611
16	0.723333333	0.61	0.32	0.551111
17	0.741666667	0.62	0.3	0.553889
18	0.679166667	0.01	0.39	0.359722
19	0.721666667	0.02	0.4	0.380556
20	0.679166667	0.01	0.42	0.369722
21	0.685	0.01	0.43	0.375
22	0.696666667	0	0.42	0.372222
23	0.706666667	0.01	0.3	0.338889
24	0.693333333	0.02	0.34	0.351111
25	0.6925	0.02	0.28	0.330833
26	0.763333333	0.6	0.34	0.567778

Summary of Fit

RSquare	0.92698
RSquare Adj	0.834046
Root Mean Square Error	0.041942
Mean of Response	0.442831
Observations (or Sum Wgts)	26

Analysis of Variance

Source	DF	Sum of Squares	Mean Square	F Ratio
Model	14	0.24565037	0.017546	9.9746
Error	11	0.01935025	0.001759	Prob > F
C. Total	25	0.26500062		0.0003*

Parameter Estimates

Term	Estimate	Std Error	t Ratio	Prob>|t|
Intercept	0.5156389	0.016626	31.01	<.0001*
Frequency(2200,8600)	0.0028086	0.009886	0.28	0.7816
Power(15000,96000)	0.0565123	0.009886	5.72	0.0001*
Array High(0.55,1.22)	0.0533951	0.009886	5.40	0.0002*
Torpedo Speed(28,45)	0.0067593	0.009886	0.68	0.5083
Frequency*Power	-0.001528	0.010485	-0.15	0.8868
Frequency*Array High	0.0037153	0.010485	0.35	0.7298
Power*Array High	0.0556944	0.010485	5.31	0.0002*
Frequency*Torpedo Speed	0.0047569	0.010485	0.45	0.6589
Power*Torpedo Speed	0.0065972	0.010485	0.63	0.5421
Array High*Torpedo Speed	-0.001563	0.010485	-0.15	0.8842
Frequency*Frequency	-0.126083	0.026209	-4.81	0.0005*
Power*Power	-0.025528	0.026209	-0.97	0.3510
Array High*Array High	-0.028028	0.026209	-1.07	0.3078
Torpedo Speed*Torpedo Speed	0.0744722	0.026209	2.84	0.0160*

Figure 60. RSM Statistics for OPSIT 1

Table 40. Screening Design for OPSIT 2

	Antenna Diameter (m)	Radar Peak Power (kW)	Frequency (MHz)	#SAM	SAM Speed (m/s)	SAM Range (km)	Gun Range (km)	Projectile Speed (m/s)	Fire Rate (Proj/min)
1	6.3	360	9.5	24	1360	45	16	1035	220
2	0.8	25	9.5	16	1360	6	12	1035	220
3	0.8	360	9.5	24	1360	45	12	807	20
4	0.8	360	9.5	8	680	6	16	1035	20
5	6.3	25	0.9	8	1360	45	12	807	220
6	6.3	360	9.5	8	680	6	12	807	220
7	0.8	25	9.5	16	680	45	16	807	220
8	0.8	25	0.9	8	1360	45	16	1035	20
9	6.3	25	9.5	16	680	45	12	1035	20
10	6.3	25	0.9	24	680	6	16	1035	220
11	6.3	360	0.9	16	680	45	16	807	20
12	3.55	192.5	5.2	8	1020	25.5	14	921	120
13	6.3	360	0.9	16	1360	6	12	1035	20
14	0.8	360	0.9	8	680	45	12	1035	220
15	0.8	25	0.9	24	680	6	12	807	20
16	0.8	25	0.9	24	680	6	12	807	20
17	6.3	25	9.5	8	1360	6	16	807	20
18	6.3	360	9.5	24	1360	45	16	1035	220
19	0.8	360	0.9	16	1360	6	16	807	220
20	3.55	192.5	5.2	16	1020	25.5	14	921	120

Table 41. Screening Responses for OPSIT 2

	Pier Survivability	Aircraft Killed	PES Survivability	MOE
1	0.917	1.906	0.763	0.718833333
2	0.775	1.737	0	0.403083333
3	0.912	1.9	0.893	0.76
4	0.451	1.274	0.308	0.359166667
5	0.457	1.265	0.28	0.351083333
6	0.456	1.281	0.19	0.322083333
7	0.776	1.735	0.579	0.59625
8	0.487	1.333	0.266	0.362083333
9	0.765	1.727	0.582	0.592916667
10	0.903	1.894	0.058	0.478166667
11	0.766	1.72	0.578	0.591333333
12	0.443	1.28	0.307	0.356666667
13	0.787	1.742	0	0.4075
14	0.469	1.295	0.304	0.365583333
15	0.014	1.912	0.006	0.166
16	0.006	1.888	0.011	0.163
17	0.465	1.271	0.272	0.351583333
18	0.921	1.907	0.764	0.720583333
19	0.785	1.752	0	0.407666667
20	0.791	1.755	0.597	0.608916667

Summary of Fit

RSquare	0.90749
RSquare Adj	0.804701
Root Mean Square Error	0.076245
Mean of Response	0.454125
Observations (or Sum Wgts)	20

Analysis of Variance

Source	DF	Sum of Squares	Mean Square	F Ratio
Model	10	0.51323858	0.051324	8.8287
Error	9	0.05231990	0.005813	Prob > F
C. Total	19	0.56555848		0.0015*

Lack Of Fit

Source	DF	Sum of Squares	Mean Square	F Ratio
				2478.229
Lack Of Fit	7	0.05231387	0.007473	Prob > F
Pure Error	2	0.00000603	3.016e-6	0.0004*
Total Error	9	0.05231990		Max RSq
				1.0000

Parameter Estimates

Term	Estimate	Std Error	t Ratio	Prob>|t|
Intercept	0.4563618	0.017094	26.70	<.0001*
Antenna Diameter(0.8,6.3)	0.0247526	0.018456	1.34	0.2127
Radar Peak Power(25,360)	0.0395859	0.018456	2.14	0.0605
Frequency(0.9,9.5)	0.0610547	0.018456	3.31	0.0091*
#SAM[8]	-0.103755	0.023854	-4.35	0.0019*
#SAM[16]	0.0590192	0.023854	2.47	0.0353*
SAM Speed(680,1360)	0.0182943	0.018456	0.99	0.3475
SAM Range(6,45)	0.0903255	0.018456	4.89	0.0009*
Gun Range(12,16)	0.0312005	0.018456	1.69	0.1252
Projectile Speed(807,1035)	0.0089818	0.018456	0.49	0.6381
Fire Rate(20,220)	0.0034089	0.018456	0.18	0.8576

Figure 61. Screening Model Statistics for OPSIT 1

Table 42. RSM Design for OPSIT 2

	SAM Range (km)	Radar Frequency (MHz)	# SAM	Radar Peak Power (kW)	Antenna Diameter (m)	Gun Range (km)
1	25.5	5.2	12	192.5	3.55	12
2	25.5	5.2	12	192.5	6.3	14
3	45	0.9	16	25	6.3	12
4	6	0.9	16	360	6.3	12
5	45	0.9	8	360	0.8	16
6	25.5	5.2	12	192.5	3.55	16
7	45	0.9	16	360	0.8	12
8	45	9.5	8	360	0.8	12
9	25.5	5.2	16	192.5	3.55	14
10	45	9.5	16	360	0.8	16
11	25.5	5.2	12	192.5	3.55	14
12	25.5	5.2	8	192.5	3.55	14
13	25.5	5.2	12	360	3.55	14
14	6	9.5	16	360	6.3	16
15	6	9.5	8	25	0.8	12
16	25.5	5.2	12	192.5	0.8	14
17	6	0.9	16	360	0.8	16
18	25.5	5.2	12	25	3.55	14
19	45	9.5	16	25	0.8	12
20	6	9.5	16	25	0.8	16
21	45	0.9	8	360	6.3	12
22	25.5	0.9	12	192.5	3.55	14
23	6	0.9	8	360	6.3	16
24	25.5	9.5	12	192.5	3.55	14
25	45	0.9	8	25	6.3	16
26	45	9.5	16	360	6.3	12
27	6	0.9	16	25	6.3	16
28	45	0.9	8	25	0.8	12
29	6	5.2	12	192.5	3.55	14
30	6	9.5	8	360	0.8	16
31	6	0.9	8	360	0.8	12
32	6	0.9	16	25	0.8	12
33	6	0.9	8	25	0.8	16
34	6	9.5	8	360	6.3	12
35	45	9.5	16	25	6.3	16
36	45	0.9	16	25	0.8	16

37	45	9.5	8	360	6.3	16
38	6	9.5	8	25	6.3	16
39	6	9.5	16	360	0.8	12
40	6	0.9	8	25	6.3	12
41	45	9.5	8	25	6.3	12
42	6	9.5	16	25	6.3	12
43	45	5.2	12	192.5	3.55	14
44	25.5	5.2	12	192.5	3.55	14
45	45	0.9	16	360	6.3	16
46	45	9.5	8	25	0.8	16

Table 43. RSM Responses for OPSIT 2

	Pier Survivability	Aircraft Killed	PES Survivability	MOE
1	0.669	1.594	0.416	0.4945
2	0.655	1.566	0.309	0.451833333
3	0.786	1.746	0.59	0.604166667
4	0.791	1.751	0.102	0.443583333
5	0.451	1.265	0.287	0.351416667
6	0.646	1.557	0.455	0.49675
7	0.768	1.731	0.58	0.593583333
8	0.448	1.27	0.291	0.352166667
9	0.813	1.78	0.587	0.615
10	0.797	1.763	0.613	0.616916667
11	0.639	1.576	0.423	0.485333333
12	0.439	1.234	0.324	0.357166667
13	0.645	1.558	0.427	0.487166667
14	0.759	1.716	0.345	0.511
15	0.466	1.302	0.302	0.3645
16	0.671	1.588	0.406	0.491333333
17	0.779	1.746	0.098	0.437833333
18	0.665	1.601	0.455	0.50675
19	0.808	1.778	0.586	0.612833333
20	0.779	1.743	0.102	0.438916667
21	0.471	1.288	0.289	0.360666667
22	0.635	1.542	0.417	0.479166667
23	0.461	1.294	0.313	0.365833333
24	0.652	1.556	0.42	0.487
25	0.445	1.241	0.306	0.35375

26	0.779	1.739	0.414	0.542583333
27	0.781	1.738	0.105	0.440166667
28	0.011	1.282	0.253	0.194833333
29	0.647	1.58	0.385	0.475666667
30	0.45	1.278	0.318	0.3625
31	0.455	1.282	0.319	0.364833333
32	0.009	1.744	0.014	0.153
33	0.01	1.257	0.298	0.207416667
34	0.455	1.298	0.208	0.329166667
35	0.784	1.754	0.615	0.6125
36	0.011	1.729	0.009	0.15075
37	0.448	1.272	0.201	0.322333333
38	0.468	1.273	0.307	0.364416667
39	0.774	1.732	0.097	0.434666667
40	0.451	1.281	0.307	0.359416667
41	0.456	1.278	0.297	0.3575
42	0.802	1.769	0.107	0.450416667
43	0.635	1.554	0.426	0.483166667
44	0.645	1.572	0.426	0.488
45	0.791	1.753	0.617	0.615416667
46	0.467	1.29	0.325	0.3715

Summary of Fit

RSquare	0.892915
RSquare Adj	0.732288
Root Mean Square Error	0.061272
Mean of Response	0.431292
Observations (or Sum Wgts)	46

Analysis of Variance

Source	DF	Sum of Squares	Mean Square	F Ratio
Model	27	0.56348405	0.020870	5.5589
Error	18	0.06757692	0.003754	Prob > F
C. Total	45	0.63106097		0.0002*

Lack Of Fit

Source	DF	Sum of Squares	Mean Square	F Ratio
Lack Of Fit	17	0.06757336	0.003975	1117.941
Pure Error	1	0.00000356	3.556e-6	Prob > F
Total Error	18	0.06757692		0.0235*
				Max RSq
				1.0000

Parameter Estimates

Term	Estimate	Std Error	t Ratio	Prob>|t|
Intercept	0.4982399	0.019141	26.03	<.0001*
SAM Range(6,45)	0.0291985	0.010508	2.78	0.0124*
Frequency(0.9,9.5)	0.0310319	0.010508	2.95	0.0085*
# SAM(8,16)	0.074527	0.010508	7.09	<.0001*
Radar Peak Power(25,360)	0.0279069	0.010508	2.66	0.0161*
Antenna Diameter(0.8,6.3)	0.0289926	0.010508	2.76	0.0129*
Gun Range(12,16)	0.0002059	0.010508	0.02	0.9846
SAM Range*Frequency	0.0025078	0.010831	0.23	0.8195
SAM Range*# SAM	0.0341589	0.010831	3.15	0.0055*
Frequency*# SAM	0.0161068	0.010831	1.49	0.1543
SAM Range*Radar Peak Power	0.0008151	0.010831	0.08	0.9408
Frequency*Radar Peak Power	-0.036591	0.010831	-3.38	0.0033*
# SAM*Radar Peak Power	0.0155391	0.010831	1.43	0.1685
SAM Range*Antenna Diameter	0.0007682	0.010831	0.07	0.9442
Frequency*Antenna Diameter	-0.036044	0.010831	-3.33	0.0037*
# SAM*Antenna Diameter	0.0167943	0.010831	1.55	0.1384
Radar Peak Power*Antenna Diameter	-0.033497	0.010831	-3.09	0.0063*
SAM Range*Gun Range	-0.014133	0.010831	-1.30	0.2084
Frequency*Gun Range	0.0096172	0.010831	0.89	0.3863
# SAM*Gun Range	-0.000857	0.010831	-0.08	0.9378
Radar Peak Power*Gun Range	0.0099766	0.010831	0.92	0.3692
Antenna Diameter*Gun Range	0.0084714	0.010831	0.78	0.4443
SAM Range*SAM Range	-0.021138	0.039734	-0.53	0.6012
Frequency*Frequency	-0.017471	0.039734	-0.44	0.6654
# SAM*# SAM	-0.014471	0.039734	-0.36	0.7199
Radar Peak Power*Radar Peak Power	-0.003596	0.039734	-0.09	0.9289
Antenna Diameter*Antenna Diameter	-0.028971	0.039734	-0.73	0.4753
Gun Range*Gun Range	-0.004929	0.039734	-0.12	0.9026

Figure 62. RSM Statistics for OPSIT 2

Table 44. RSM Design and Responses for OPSIT 3

	Sonar Frequency (Hz)	Power (W)	Diameter Array (m)	High Array (m)	MOE (PES Survivability)
1	5400	55500	1.22	0.885	0.9878
2	2200	96000	0.85	0.55	0.352
3	5400	55500	1.035	0.55	0.8648
4	2200	96000	0.85	1.22	0.9096
5	8600	96000	1.22	1.22	0.9878
6	2200	15000	0.85	0.55	0.0764
7	5400	55500	1.035	1.22	0.9886
8	2200	55500	1.035	0.885	0.7678
9	8600	15000	0.85	1.22	0.934
10	5400	15000	1.035	0.885	0.796
11	8600	15000	1.22	0.55	0.7836
12	5400	55500	0.85	0.885	0.9672
13	2200	96000	1.22	0.55	0.738
14	8600	55500	1.035	0.885	0.9868
15	2200	96000	1.22	1.22	0.9874
16	2200	15000	1.22	0.55	0.1112
17	8600	96000	0.85	1.22	0.9884
18	5400	96000	1.035	0.885	0.9874
19	5400	55500	1.035	0.885	0.9888
20	8600	15000	1.22	1.22	0.987
21	2200	15000	0.85	1.22	0.2532
22	8600	96000	0.85	0.55	0.983
23	8600	96000	1.22	0.55	0.9884
24	5400	55500	1.035	0.885	0.987
25	2200	15000	1.22	1.22	0.6746
26	8600	15000	0.85	0.55	0.4498

Summary of Fit

RSquare	0.923442
RSquare Adj	0.826005
Root Mean Square Error	0.121521
Mean of Response	0.789485
Observations (or Sum Wgts)	26

Analysis of Variance

Source	DF	Sum of Squares	Mean Square	F Ratio
Model	14	1.9593754	0.139955	9.4773
Error	11	0.1624414	0.014767	Prob > F
C. Total	25	2.1218167		0.0003*

Lack Of Fit

Source	DF	Sum of Squares	Mean Square	F Ratio
Lack Of Fit	10	0.16243975	0.016244	10027.15
Pure Error	1	0.00000162	1.62e-6	Prob > F
Total Error	11	0.16244137		0.0078*
				Max RSq
				1.0000

Parameter Estimates

Term	Estimate	Std Error	t Ratio	Prob>|t|
Intercept	0.9900086	0.048173	20.55	<.0001*
Sonar Frequency(2200,8600)	0.1788111	0.028643	6.24	<.0001*
Tx Power(15000,96000)	0.1586778	0.028643	5.54	0.0002*
Diameter Array(0.85,1.22)	0.0740111	0.028643	2.58	0.0254*
High Array(0.55,1.22)	0.1313	0.028643	4.58	0.0008*
Sonar Frequency*Tx Power	-0.0674	0.03038	-2.22	0.0485*
Sonar Frequency*Diameter Array	-0.033025	0.03038	-1.09	0.3003
Tx Power*Diameter Array	-0.0234	0.03038	-0.77	0.4574
Sonar Frequency*High Array	-0.053425	0.03038	-1.76	0.1064
Tx Power*High Array	-0.0385	0.03038	-1.27	0.2312
Diameter Array*High Array	-0.013025	0.03038	-0.43	0.6764
Sonar Frequency*Sonar Frequency	-0.113411	0.075936	-1.49	0.1634
Tx Power*Tx Power	-0.099011	0.075936	-1.30	0.2189
Diameter Array*Diameter Array	-0.013211	0.075936	-0.17	0.8650
High Array*High Array	-0.064011	0.075936	-0.84	0.4172

Figure 63. RSM Statistics for OPSIT 3

Table 45. Screening Design for OPSIT 4

	Radar Tx Power	Antenna Diameter	Radar Freq.	#SSM	SSM Speed	SSM Range	#SAM	SAM Speed	SAM Range	CWIS	Decoys
1	360	6.3	9.5	4	108	220	24	1360	45	NO	NO
2	25	0.8	0.9	4	476	220	24	1360	45	YES	YES
3	25	0.8	9.5	12	476	220	24	680	6	NO	NO
4	360	6.3	0.9	12	108	220	24	680	6	YES	YES
5	192.5	3.55	5.2	8	292	135	16	1020	25.5	NO	NO
6	25	6.3	0.9	12	108	50	24	680	45	YES	NO
7	360	6.3	9.5	4	476	50	8	680	6	YES	YES
8	25	0.8	0.9	12	108	220	24	1360	45	NO	NO
9	360	0.8	9.5	12	108	220	8	1360	6	YES	NO
10	360	0.8	0.9	12	108	50	24	1360	6	NO	YES
11	360	6.3	0.9	4	476	220	24	680	6	NO	NO
12	25	0.8	9.5	4	108	220	24	680	6	YES	YES
13	25	0.8	9.5	4	476	50	8	1360	45	NO	NO
14	360	6.3	9.5	12	108	50	8	680	6	NO	NO
15	360	0.8	0.9	4	108	220	8	680	45	NO	YES
16	25	6.3	0.9	4	476	50	24	680	45	NO	YES
17	360	0.8	0.9	12	476	220	8	680	45	YES	NO
18	192.5	3.55	5.2	8	292	135	16	1020	25.5	NO	YES
19	25	6.3	0.9	12	476	220	8	1360	6	NO	YES
20	25	0.8	0.9	12	476	50	8	680	6	YES	YES
21	25	6.3	9.5	4	476	220	8	680	45	YES	NO
22	360	0.8	0.9	4	476	50	24	1360	6	YES	NO
23	25	6.3	9.5	12	476	50	24	1360	6	YES	NO
24	360	6.3	9.5	12	476	220	24	1360	45	YES	YES
25	25	6.3	0.9	4	108	220	8	1360	6	YES	NO
26	360	0.8	9.5	4	476	220	8	1360	6	NO	YES
27	360	6.3	0.9	4	108	50	8	1360	45	YES	YES
28	360	0.8	9.5	12	476	50	24	680	45	NO	YES
29	25	0.8	9.5	12	108	50	8	1360	45	YES	YES
30	25	0.8	0.9	4	108	50	8	680	6	NO	NO
31	25	6.3	9.5	12	108	220	8	680	45	NO	YES
32	25	6.3	9.5	4	108	50	24	1360	6	NO	YES
33	360	0.8	9.5	4	108	50	24	680	45	YES	NO
34	360	6.3	0.9	12	476	50	8	1360	45	NO	NO

Table 46. Screening Responses for OPSIT 4

	M1 Red SC Killed	M2 LST Killed	M3 PES Hits	MOE
1	0	0	0.259	0.326645
2	0	0	5.467467	0.192142
3	0.235235	0.322322	12.90791	0.185853
4	0.245245	0.36036	5.522523	0.392588
5	0.011011	0.013013	3.288288	0.256425
6	0.252252	0.318318	0.181181	0.518845
7	0	0	5.383383	0.194313
8	0.236236	0.351351	12.81782	0.198189
9	0.225225	0.321321	11.06807	0.229694
10	0.249249	0.316316	6.397397	0.356649
11	0	0	12.71872	0.004886
12	0	0	5.565566	0.189608
13	0.001001	0	12.74675	0.004495
14	0.229229	0.335335	12.78879	0.191264
15	0	0	6.301301	0.170609
16	0	0	0.151151	0.32943
17	0.232232	0.315315	10.87988	0.234888
18	0.011011	0.007007	1.636637	0.297075
19	0.23023	0.327327	6.359359	0.354962
20	0.259259	0.345345	5.484484	0.393237
21	0	0	10.94695	0.05064
22	0	0	10.89089	0.052087
23	0.247247	0.332332	10.92893	0.244298
24	0.238238	0.32032	0.096096	0.517038
25	0	0	10.86286	0.052811
26	0	0	6.482482	0.16593
27	0	0	3.187187	0.251028
28	0.219219	0.341341	6.458458	0.353404
29	0.22022	0.298298	5.530531	0.363353
30	0	0	12.88989	0.000465
31	0.212212	0.329329	6.37037	0.349339
32	0	0	6.466466	0.166344
33	0	0	10.91291	0.051519
34	0.249249	0.347347	7.881882	0.328657

Summary of Fit

RSquare	0.953776
RSquare Adj	0.782086
Root Mean Square Error	0.064692
Mean of Response	0.234374
Observations (or Sum Wgts)	34

Analysis of Variance

Source	DF	Sum of Squares	Mean Square	F Ratio
Model	26	0.60446776	0.023249	5.5552
Error	7	0.02929519	0.004185	Prob > F
C. Total	33	0.63376295		0.0128*

Parameter Estimates

Term	Estimate	Std Error	t Ratio	Prob>|t|
Intercept	0.2349922	0.011114	21.14	<.0001*
Radar Tx Power (kW)(25,360)	0.0070996	0.011436	0.62	0.5544
Antenna Diameter(0.8,6.3)	0.0353427	0.011436	3.09	0.0176*
Radar Frequency (GHz)(0.9,9.5)	-0.007742	0.011436	-0.68	0.5202
#SSM(4,12)	0.0940408	0.011436	8.22	<.0001*
SSM Speed (m/s)(108,476)	-0.006334	0.011436	-0.55	0.5969
SSM Range (km)(50,220)	-0.005736	0.011436	-0.50	0.6313
#SAM(8,24)	0.023245	0.011436	2.03	0.0816
SAM Speed (m/s)(680,1360)	0.0060448	0.011436	0.53	0.6134
SAM Range(6,45)	0.0332884	0.011436	2.91	0.0226*
CWIS[NO]	-0.010513	0.011114	-0.95	0.3757
decoys[NO]	-0.061923	0.011095	-5.58	0.0008*
Radar Tx Power (kW)*Antenna Diameter	0.0016348	0.011436	0.14	0.8904
Radar Tx Power (kW)*Radar Frequency (GHz)	0.0226427	0.011436	1.98	0.0882
Radar Tx Power (kW)*#SSM	-0.007343	0.011436	-0.64	0.5413
Radar Tx Power (kW)*SSM Speed (m/s)	-0.001091	0.011436	-0.10	0.9267
Radar Tx Power (kW)*SSM Range (km)	0.0221962	0.011436	1.94	0.0934
Radar Tx Power (kW)*#SAM	-0.005218	0.011436	-0.46	0.6620
Radar Tx Power (kW)*SAM Speed (m/s)	0.0335963	0.011436	2.94	0.0218*
Radar Tx Power (kW)*SAM Range	0.00711	0.011436	0.62	0.5538
Radar Tx Power (kW)*CWIS[NO]	0.0122108	0.011436	1.07	0.3211
Radar Tx Power (kW)*decoys[NO]	0.0031531	0.011436	0.28	0.7907
Antenna Diameter*Radar Frequency (GHz)	-0.004341	0.011436	-0.38	0.7155
Antenna Diameter*#SSM	0.0010152	0.011436	0.09	0.9317
Antenna Diameter*SSM Speed (m/s)	-0.007706	0.011436	-0.67	0.5220
Radar Frequency (GHz)*#SSM	-0.013744	0.011436	-1.20	0.2685
SSM Speed (m/s)*SSM Range (km)	-0.006363	0.011436	-0.56	0.5953

Figure 64. Screening Model Statistics for OPSIT 4

Table 47. RSM Design for OPSIT 4

	Radar Tx Power	Antenna Diameter	Radar Freq.	#SSM	SSM Speed	#SAM	SAM Range	CWIS
1	192.5	3.55	9.5	8	292	16	25.5	0.5
2	192.5	3.55	5.2	8	292	16	25.5	0.5
3	360	6.3	9.5	12	108	24	45	1
4	360	0.8	0.9	4	476	8	6	0
5	192.5	3.55	5.2	12	292	16	25.5	0.5
6	360	6.3	0.9	4	476	8	45	0
7	360	6.3	9.5	12	476	24	6	0
8	25	6.3	0.9	12	108	8	45	1
9	25	0.8	0.9	4	108	8	45	0
10	25	6.3	9.5	4	476	8	6	1
11	25	6.3	9.5	12	108	24	45	0
12	360	0.8	0.9	12	108	24	45	1
13	25	6.3	0.9	12	108	24	6	0
14	192.5	3.55	5.2	8	292	24	25.5	0.5
15	25	0.8	9.5	4	476	24	6	0
16	360	6.3	9.5	4	108	24	6	0
17	360	0.8	0.9	12	108	8	6	0
18	360	0.8	9.5	4	108	8	6	1
19	25	0.8	0.9	4	476	8	6	1
20	360	6.3	0.9	4	108	24	45	0
21	25	0.8	0.9	12	476	8	45	0
22	25	0.8	9.5	12	476	24	45	1
23	360	6.3	9.5	12	108	8	6	0
24	192.5	3.55	5.2	8	292	16	6	0.5
25	25	6.3	0.9	12	476	24	45	1
26	360	0.8	9.5	4	108	24	45	0
27	192.5	3.55	5.2	8	292	8	25.5	0.5
28	360	0.8	0.9	4	108	24	6	0
29	25	6.3	9.5	12	476	24	6	1
30	25	6.3	0.9	4	476	8	45	1
31	25	0.8	9.5	4	108	8	6	0
32	360	0.8	9.5	12	108	8	45	0
33	25	6.3	9.5	4	108	8	45	0
34	25	0.8	0.9	12	108	24	45	0
35	360	6.3	0.9	12	108	24	6	1

36	25	6.3	0.9	12	476	8	6	0
37	25	6.3	9.5	12	108	8	6	1
38	25	0.8	0.9	4	108	24	6	1
39	360	0.8	0.9	4	476	24	45	1
40	192.5	3.55	5.2	8	292	16	25.5	0
41	360	6.3	0.9	12	476	8	6	1
42	25	6.3	0.9	4	108	8	6	0
43	192.5	3.55	5.2	8	108	16	25.5	0.5
44	360	6.3	0.9	4	476	24	6	1
45	360	0.8	9.5	4	476	24	6	1
46	360	0.8	9.5	4	476	8	45	0
47	192.5	3.55	5.2	8	292	16	25.5	0.5
48	360	6.3	0.9	4	108	8	6	1
49	192.5	3.55	5.2	8	292	16	45	0.5
50	25	6.3	9.5	4	108	24	6	1
51	360	6.3	0.9	12	476	24	45	0
52	360	0.8	0.9	12	476	8	45	1
53	360	0.8	9.5	12	108	24	6	1
54	360	0.8	9.5	12	476	24	45	0
55	360	0.8	9.5	12	476	8	6	1
56	25	0.8	9.5	4	108	24	45	1
57	25	6.3	9.5	12	476	8	45	0
58	192.5	3.55	5.2	8	292	16	25.5	1
59	360	6.3	0.9	12	108	8	45	0
60	25	0.8	9.5	12	108	24	6	0
61	360	6.3	9.5	12	476	8	45	1
62	192.5	3.55	5.2	4	292	16	25.5	0.5
63	192.5	0.8	5.2	8	292	16	25.5	0.5
64	192.5	3.55	5.2	8	476	16	25.5	0.5
65	25	0.8	9.5	12	108	8	45	1
66	360	6.3	9.5	4	476	24	45	1
67	25	3.55	5.2	8	292	16	25.5	0.5
68	360	6.3	9.5	4	108	8	45	1
69	25	0.8	0.9	12	108	8	6	1
70	25	6.3	0.9	4	108	24	45	1
71	360	0.8	0.9	4	108	8	45	1
72	192.5	6.3	5.2	8	292	16	25.5	0.5
73	25	0.8	9.5	12	476	8	6	0
74	25	0.8	0.9	12	476	24	6	1
75	25	6.3	9.5	4	476	24	45	0

76	360	3.55	5.2	8	292	16	25.5	0.5
77	25	0.8	0.9	4	476	24	45	0
78	192.5	3.55	0.9	8	292	16	25.5	0.5
79	360	6.3	9.5	4	476	8	6	0
80	360	0.8	0.9	12	476	24	6	0
81	25	0.8	9.5	4	476	8	45	1
82	25	6.3	0.9	4	476	24	6	0

Table 48. RSM Responses for OPSIT 4

	M1 Red SC Killed	M2 LST Killed	M3 PES Hits	MOE
1	0.003	0.009	6.55	0.168186
2	0.008	0.015	1.707	0.296918
3	0.233	0.336	0.095	0.520547
4	0	0	6.455	0.16664
5	0.244	0.326	1.706	0.479278
6	0	0	3.952	0.231277
7	0.231	0.331	6.314	0.357614
8	0.238	0.322	3.143	0.438835
9	0.244	0.326	1.706	0.479278
10	0	0	5.412	0.193574
11	0.23	0.326	6.392	0.3536
12	0.223	0.335	5.498	0.377353
13	0.202	0.311	6.318	0.341178
14	0.006	0.012	0.152	0.335408
15	0.001	0	6.46	0.166844
16	0	0	6.379	0.168602
17	0.257	0.337	6.362	0.367041
18	0	0	5.4	0.193884
19	0	0	5.516	0.190888
20	0	0	0.176	0.328788
21	0.252	0.323	6.384	0.36014
22	0.218	0.304	5.563	0.363675
23	0.223	0.308	5.483	0.368741
24	0.001	0.01	6.361	0.172734
25	0.262	0.324	0.113	0.525749
26	0	0	6.324	0.170023
27	0.007	0.009	4.008	0.235164

28	0	0	6.477	0.166072
29	0.257	0.334	5.43	0.390109
30	0	0	3.21	0.250438
31	0	0	6.444	0.166924
32	0.263	0.349	6.336	0.373713
33	0	0	6.374	0.168731
34	0.24	0.321	6.414	0.354698
35	0.253	0.348	5.505	0.391506
36	0.225	0.313	6.347	0.348762
37	0.262	0.284	5.4	0.375884
38	0	0	5.408	0.193677
39	0	0	5.437	0.192928
40	0.004	0.01	1.685	0.294487
41	0.247	0.303	5.428	0.376494
42	0	0	6.39	0.168318
43	0.011	0.007	1.664	0.296362
44	0	0	5.415	0.193497
45	0	0	5.412	0.193574
46	0	0	6.453	0.166691
47	0.003	0.012	1.636	0.296085
48	0	0	5.421	0.193342
49	0.008	0.01	1.716	0.295019
50	0	0	5.431	0.193083
51	0.232	0.276	0.173	0.498199
52	0.249	0.331	5.449	0.385952
53	0.249	0.351	5.503	0.391224
54	0.23	0.332	6.35	0.356685
55	0.26	0.328	5.438	0.388903
56	0	0	5.568	0.189546
57	0.243	0.33	6.347	0.360429
58	0.01	0.012	1.237	0.308722
59	0.203	0.327	3.94	0.408254
60	0.25	0.31	6.46	0.353177
61	0.223	0.312	3.225	0.428384
62	0	0	1.605	0.291886
63	0.015	0.011	6.479	0.174687
64	0.005	0.011	1.665	0.29567
65	0.233	0.351	5.655	0.381965
66	0	0	0.107	0.33057
67	0.006	0.01	6.389	0.173677

68	0	0	3.189	0.250981
69	0.256	0.331	5.349	0.390868
70	0	0	0.106	0.330596
71	0	0	5.369	0.194684
72	0.012	0.013	1.58	0.300865
73	0.247	0.324	6.481	0.356302
74	0.225	0.336	5.49	0.37856
75	0	0	6.397	0.168137
76	0.005	0.01	1.61	0.296757
77	0	0	6.337	0.169687
78	0.01	0.012	1.632	0.298522
79	0	0	6.466	0.166356
80	0.267	0.319	6.394	0.363548
81	0	0	5.531	0.190501
82	0	0	6.327	0.169945

Summary of Fit

RSquare	0.909569
RSquare Adj	0.802031
Root Mean Square Error	0.04497
Mean of Response	0.294349
Observations (or Sum Wgts)	82

Analysis of Variance

Source	DF	Sum of Squares	Mean Square	F Ratio
Model	44	0.75259660	0.017104	8.4580
Error	37	0.07482407	0.002022	Prob > F
C. Total	81	0.82742067		<.0001*

Lack Of Fit

Source	DF	Sum of Squares	Mean Square	F Ratio
Lack Of Fit	36	0.07482373	0.002078	5988.303
Pure Error	1	0.00000035	3.471e-7	Prob > F
Total Error	37	0.07482407		0.0102*
				Max RSq
				1.0000

Figure 65. RSM Statistics for OPSIT 4 (Summary)

Parameter Estimates

Term	Estimate	Std Error	t Ratio	Prob>|t|
Intercept	0.2761704	0.011933	23.14	<.0001*
Radar Tx Power(25,360)	0.0048643	0.005535	0.88	0.3852
Antenna Diameter(0.8,6.3)	0.0148645	0.005535	2.69	0.0108*
Radar Freq.(0.9,9.5)	-0.013008	0.005535	-2.35	0.0242*
#SSM(4,12)	0.0896576	0.005535	16.20	<.0001*
SSM Speed(108,476)	-0.005527	0.005535	-1.00	0.3246
#SAM(8,24)	0.0039403	0.005535	0.71	0.4810
SAM Range(6,45)	0.024215	0.005535	4.37	<.0001*
CWIS(0,1)	0.0129033	0.005535	2.33	0.0253*
Radar Tx Power*Antenna Diameter	0.0105249	0.005621	1.87	0.0691
Radar Tx Power*Radar Freq.	0.0110946	0.005621	1.97	0.0559
Antenna Diameter*Radar Freq.	-0.001116	0.005621	-0.20	0.8437
Radar Tx Power*#SSM	0.0056639	0.005621	1.01	0.3202
Antenna Diameter*#SSM	0.0035326	0.005621	0.63	0.5336
Radar Freq.*#SSM	0.0055601	0.005621	0.99	0.3290
Radar Tx Power*SSM Speed	0.0035809	0.005621	0.64	0.5280
Antenna Diameter*SSM Speed	0.0053306	0.005621	0.95	0.3491
Radar Freq.*SSM Speed	0.0043673	0.005621	0.78	0.4421
#SSM*SSM Speed	0.0072797	0.005621	1.30	0.2033
Radar Tx Power*#SAM	0.0081089	0.005621	1.44	0.1576
Antenna Diameter*#SAM	0.0141566	0.005621	2.52	0.0162*
Radar Freq.*#SAM	0.0017231	0.005621	0.31	0.7609
#SSM*#SAM	0.003964	0.005621	0.71	0.4851
SSM Speed*#SAM	0.0055525	0.005621	0.99	0.3297
Radar Tx Power*SAM Range	0.0009388	0.005621	0.17	0.8683
Antenna Diameter*SAM Range	0.01433	0.005621	2.55	0.0151*
Radar Freq.*SAM Range	-0.012143	0.005621	-2.16	0.0373*
#SSM*SAM Range	-0.005928	0.005621	-1.05	0.2985
SSM Speed*SAM Range	-0.005004	0.005621	-0.89	0.3791
#SAM*SAM Range	0.0025193	0.005621	0.45	0.6566
Radar Tx Power*CWIS	-0.002285	0.005621	-0.41	0.6868
Antenna Diameter*CWIS	0.0111865	0.005621	1.99	0.0540
Radar Freq.*CWIS	0.0104733	0.005621	1.86	0.0704
#SSM*CWIS	0.0051637	0.005621	0.92	0.3642
SSM Speed*CWIS	0.0046204	0.005621	0.82	0.4164
#SAM*CWIS	0.0078346	0.005621	1.39	0.1717
SAM Range*CWIS	-0.000447	0.005621	-0.08	0.9370
Radar Tx Power*Radar Tx Power	-0.038049	0.029792	-1.28	0.2095
Antenna Diameter*Antenna Diameter	-0.03549	0.029792	-1.19	0.2411
Radar Freq.*Radar Freq.	-0.039912	0.029792	-1.34	0.1885
#SSM*#SSM	0.1123159	0.029792	3.77	0.0006*
SSM Speed*SSM Speed	0.0227502	0.029792	0.76	0.4499
#SAM*#SAM	0.0120203	0.029792	0.40	0.6889
SAM Range*SAM Range	-0.039389	0.029792	-1.32	0.1942
CWIS*CWIS	0.0283387	0.029792	0.95	0.3477

Figure 66. RSM Statistics for OPSIT 4 (Parameter Estimates)

THIS PAGE INTENTIONALLY LEFT BLANK

LIST OF REFERENCES

[1] E. Romero and J. E. Carreño, "Proyecto de diseño y construccion en Colombia por COTECMAR de una clase de buque de superficie que reemplace las actuales fragatas ligeras que tiene la Armada Nacional," ["Project of designing and building en Colombia by COTECMAR of a surface combatant class to replace the actual Colombian's Navy light frigates,"], Working Paper No. 0.1.2008, Cartagena, 2008.

[2] L. Baker, "Combat system design developments," *Journal of Naval Engineering*, vol. 32, no. 3, pp. 458–515, Dec. 1990. Available: http://www.jneweb.com/EntityFiles/5/1910/JNEPaperFileName/v32b3p05a.pdf. [Accessed: July 27, 2010].

[3] J. Letourneau, "Incorporating multi-criteria optimization and uncertainty analysis in the model-based systems engineering of an autonomous surface craft," M.S. thesis, Naval Postgraduate School, Monterey, CA, 2009.

[4] F. Skolnick and P. Wilkins, "Laying the foundation for successful systems engineering," *Johns Hopkins APL Technical Digest*, vol. 21, no. 2, pp. 208–216, 2000.

[5] C. Whitcomb et al., *DRM Example*, working draft, Naval Postgraduate School, July 2009.

[6] B. Blanchard and W. Fabrycky, *Systems Engineering and Analysis*, 4th ed. Upper Saddle River, NJ: Pearson Prentice Hall, 2006.

[7] US. Office of the Chairman of the Joint Chiefs of Staff. *Universal Joint Task List, Change 1*, Chairman Joint Chiefs of Staff Manual (CJCSM) 3500.04D. Washington, D.C.: CJCS, August 1, 2005. [Online]. Available: http://www.dtic.mil/doctrine/jel/cjcsd/cjcsm/m350004d.pdf. [Accessed: August 3, 2010].

[8] US. Chief of Naval Operations. Universal Naval Task List, Version 3. Washington: January 2007. [Online]. Available: http://www.marines.mil/news/publications/ Documents/MCO%203500_26A_W_CH%201.pdf. [Accessed: July 26, 2010].

[9] J. Koleser, "Determining surface combatant characteristic requirements through a mission effectiveness analysis framework," M.S. thesis, Naval Postgraduate School, Monterey, CA, 2007.

[10] H. Choi, “Naval ship concept design for the Republic of Korea Navy: a systems engineering approach,” M.S. thesis, Naval Postgraduate School, Monterey, CA, 2009.

[11] J. Hootman, “A military effectiveness analysis and decision making framework for naval ship design and acquisition,” M.S. thesis, Massachusetts Institute of Technology, Cambridge, MA, 2003.

[12] M. Kirby and D. Mavris, “A technique for selecting emerging technologies for a fleet of commercial aircraft to maximize R&D investment.” Aerospace Systems Design Laboratory, Georgia Institute of Technology, 2001. [Online]. Available: http://smartech.gatech.edu/handle/1853/6280. [Accessed: August 3, 2010].

[13] INCOSE, Systems Engineering Handbook, version 3, June 2006. [Online]. Available: http://www.inpe.br/twiki/pub/Main/MarceloEssado/ SEHandbookv3.pdf. [Accessed: August 3, 2010].

[14] INCOSE, Systems Engineering Handbook, version 2.3, 1 June 2004. [Online]. Available: sce.uhcl.edu/helm/SENG_DOCS/seng_hdbk_v2a.doc. [Accessed: August 3, 2010].

[15] K. Psallidas, C. Whitcomb, and J. Hootman, “Forecasting system level impacts of technology infusion in ship design,” *Naval Engineers Journal*, vol. 122, iss. 1, 2010.

[16] K. Psallidas, C. Whitcomb, and J. Hootman, “Theater level impacts of advanced air independent propulsion systems on conventional submarines,” *Naval Engineers Journal*, Volume 122, Iss. 1, 2010.

[17] P. Agudelo, A. Restrepo, R. Molares, C. Tejada, R. Torres, A. Osorio, “Determinacion del clima de oleaje medio y extremal en el Caribe Colombiano,” *Boletín Científico CIOH*, No. 23, Dic. 2005, pp. 33–45. [Online]. Available: http://www.cioh.org.co/dev/acceso_dev.php?nbol=cioh_bcc2304.pdf. [Accessed: Feb. 5, 2010].]

[18] R. C. Hartney, “Combat systems,” part 2, vol. 2, chap. 2, pp. 93–142, January 2004, Monterey, CA [Unpublished report].

[19] J. Eagle, *Search & Detection Theory*, class notes. Monterey: Naval Postgraduate School, Winter 2008.

[20] Robert C. Hartney, “Combat systems,” Part 2, vol. 2, chap. 11, pp. 569–660, January 2004, Monterey, CA. [Unpublished report].

[21] D. Wagner, *Naval Operations Analysis*, 3rd ed. Annapolis: Naval Institute Press, 1999.

[22] Robert C. Hartney, "Combat systems," Part 2, vol. 1, chap. 6, pp. 303–358, January 2004, Monterey, CA. [Unpublished report].

[23] "Physics of sound in the sea," Part III, NDRC Summary Technical Reports, 1949.

[24] "Gulf War mining case study," www.socyberty.com, Aug. 1, 2009. [Online]. Available: http://socyberty.com/military/gulf-war-mining-case-study/ [Accessed: April 28, 2010].

[25] "USS Samuel B. Roberts (FFG 58)," www.navysite.de. [Online]. Available: http://www.navysite.de/ffg/FFG58.HTM. [Accessed: April 28, 2010].

[26] US, Department of the Navy, *U.S. Navy Ships: Sunk & Damaged in Action during the Korean Conflict*, April 2004. [Online]. Available: http://www.history.navy.mil/faqs/faq82-4.htm. [Accessed: April 28, 2010].

[27] Surface Warfare Division Officer at-Sea Curriculum v2.0 (computer-based application), Surface Warfare Officers School, Newport, RI

[28] D. Morris, *Weaponeering: Conventional weapon system effectiveness*. Reston: AIAA education series, 2004.

[29] D. Jenn, *Microwave Devices and Radar*, vol. 2. Monterey: Naval Postgraduate School, 2004, p. 125.

[30] F. Papoulias et al., "Track, engage, & neutralize threats –asymmetric & conventional –in the littoral environment," www.*nps.edu*, slide 36, 2005. [Online]. Available: http://www.nps.edu/Academics/Institutes/Meyer/docs/2005/tsse.pdf [Accessed: August 4, 2010].

[31] J.C. Schulte, "An analysis of the historical effectiveness of anti-ship cruise missiles in littoral warfare," M.S. thesis, Naval Postgraduate School, Monterey, CA, US, 1994.

[32] W. D. Kealton, *Experimental Design for Simulation*, Proceedings of the 2000 Winter Simulation Conference, Winter 2000. [Online]. Available: portal.acm.org/ft_gateway.cfm?id=510387&type=pdf. [Accessed: July 20, 2010].

[33] A. M. Law, *Simulation Modeling and Analysis*, 4th ed. New York: McGraw Hill, 2007.

[34] H. Kerzner, *Project Management. A Systems Approach to Planning, Scheduling, and Controlling*, 10th ed. Hoboken: John Wiley and Sons, 2009.

[35] P. Smith and G. Merritt, *Proactive Risk Management*. New York: Productivity Press, 2002.

[36] A. Laverson and J. San Miguel, "An analysis of the future combat system (FCS) spin out 1 low-rate of initial production (LRIP) Contract," *Naval Postgraduate School*, NPS-GSBPP-09-024, 2009. [Online]. Available: http://edocs.nps.edu/npspubs/scholarly/TR/2009/NPS-GSBPP-09-024.pdf [Accessed: August 19, 2010].

[37] R. Pritchett, "Adding context to navy shipbuilding cost discussion," usni.org, December, 2008. [Online].Available: http://blog.usni.org/?p=473. [Accessed: August 21, 2010].

[38] D. Burbach et al, "Weighing the US Navy," *Defense Analysis*, vol.17 No. 3, pp.259–266. MIT, 2001.

[39] J. Bradford, "The next grand fleet: a resource-constrained perspective on naval acquisition challenges," rusi.org, 2005. [Online]. Available: http://www.rusi.org/downloads/assets/Bradford.pdf. [Accessed: August 15, 2010].

[40] M. Arena, I. Blickstein, O. Younossi, and C. Grammich, "Why has the cost of Navy ships risen? A macroscopic examination of the trends in U.S. naval ship costs over the past several decades," *Rand.org*, 2006. [Online]. Available: http://www.rand.org/pubs/monographs/2006/RAND_MG484.pdf. [Accessed: August 10, 2010].

[41] T. Mahnken, "The cruise missile challenge overview," *csbaonline.org*, Nov. 9, 2004. [Online]. Available: http://www.csbaonline.org/4Publications/PubLibrary/B.20041109.CruiseMiss/B.20041109.CruiseMiss.pdf . [Accessed: August 20, 2010].

[42] G. Parnell, P. Driscoll, and D. Henderson. *Decision Making In Systems Engineering and Management*. Hoboken: John Wiley & Sons, 2008.

[43] E. Knott, J. Shaeffer, and M. Tuley, *Radar Cross Section*, 2nd ed. Raleigh: SciTech Publishing, 2004. [E-book]. Available: www.knovel.com. [Accessed: August 20, 2010].

INITIAL DISTRIBUTION LIST

1. Defense Technical Information Center
   Ft. Belvoir, Virginia

2. Dudley Knox Library
   Naval Postgraduate School
   Monterey, California

3. Señor Vicealmirante
   Comandante Armada Nacional
   Bogotá, Colombia

4. Señor Vicealmirante
   Presidente COTECMAR
   Bogotá, Colombia

5. Señor Contralmirante
   Director Escuela Naval "Almirante Padilla"
   Cartagena, Colombia

6. Señor Mayor General
   Director Escuela Superior de Guerra
   Bogotá, Colombia

7. Dr. Clifford Whitcomb
   SE Chairman, Naval postgraduate School
   Monterey, California

8. Dr. Fotis Papoulias
   ME Department, Naval Postgraduate School
   Monterey, California