The Art Of Disciplined AND Agile Engineering Processes or *How To Make CMMI Easy(er)*

Mike Bernabe
Director, CMMI Initiative
Boeing Integrated Defense Systems

What CMMI Is All About

- **Traditional View**
  - The creation and enforcement of “standard” processes that satisfy the model goals
- **Better View**
  - The management of process “variation” within the goal constrains

This may result in minimum variation – It will enable agility

The Hard Things About CMMI

- **Newness**
- **Detail**
- **Scope**
- **Change**
- **Must be implemented yesterday**

How Do We Make It Easier

- **Take enough time to do it right**
- **Understand the <u>whole</u> problem**
- **Do what we do best**
  - <u>Engineer</u> a solution that falls within the constrains
- **Change as little as possible**
- **Let the system organically adapt, but apply selection pressure**

Find a Solution That Optimizes the Enterprise

Boeing IDS Enterprise Process Model

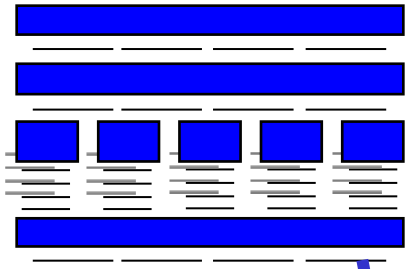

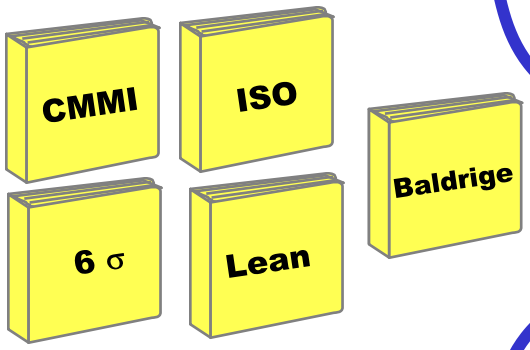

Existing Site Procedures

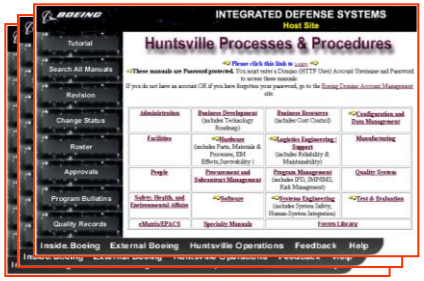

Activities and Assets Organized as a total solution

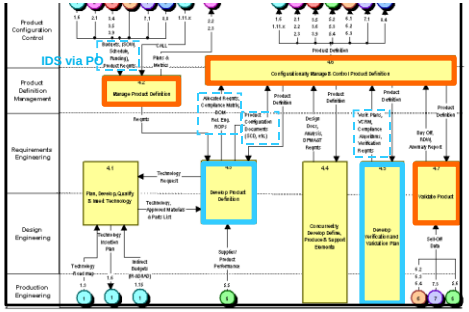

- **Determine user requirements**
- **View satisfaction of CMMI, etc., as a technical solution**
- **Understand that the solution is fundamentally evolutionary in nature**

Focus Is On the User

Product teams are provided everything required at start

Disciplined performance is the easiest and most efficient way work

The Solution Will Have Some Necessary Elements

- **Key stakeholders will "like" it because it fits**
- **Common vocabulary**
- **Anything revolutionary better have solid cost-benefit**
  - CMMI is not revolutionary
- **Variation will be intrinsic**

Variation will be natural

BOEING®

In Order To Balance Detailed Nature Of CMMI With Enterprise Agility Requirements Some Tooling Maybe Necessary

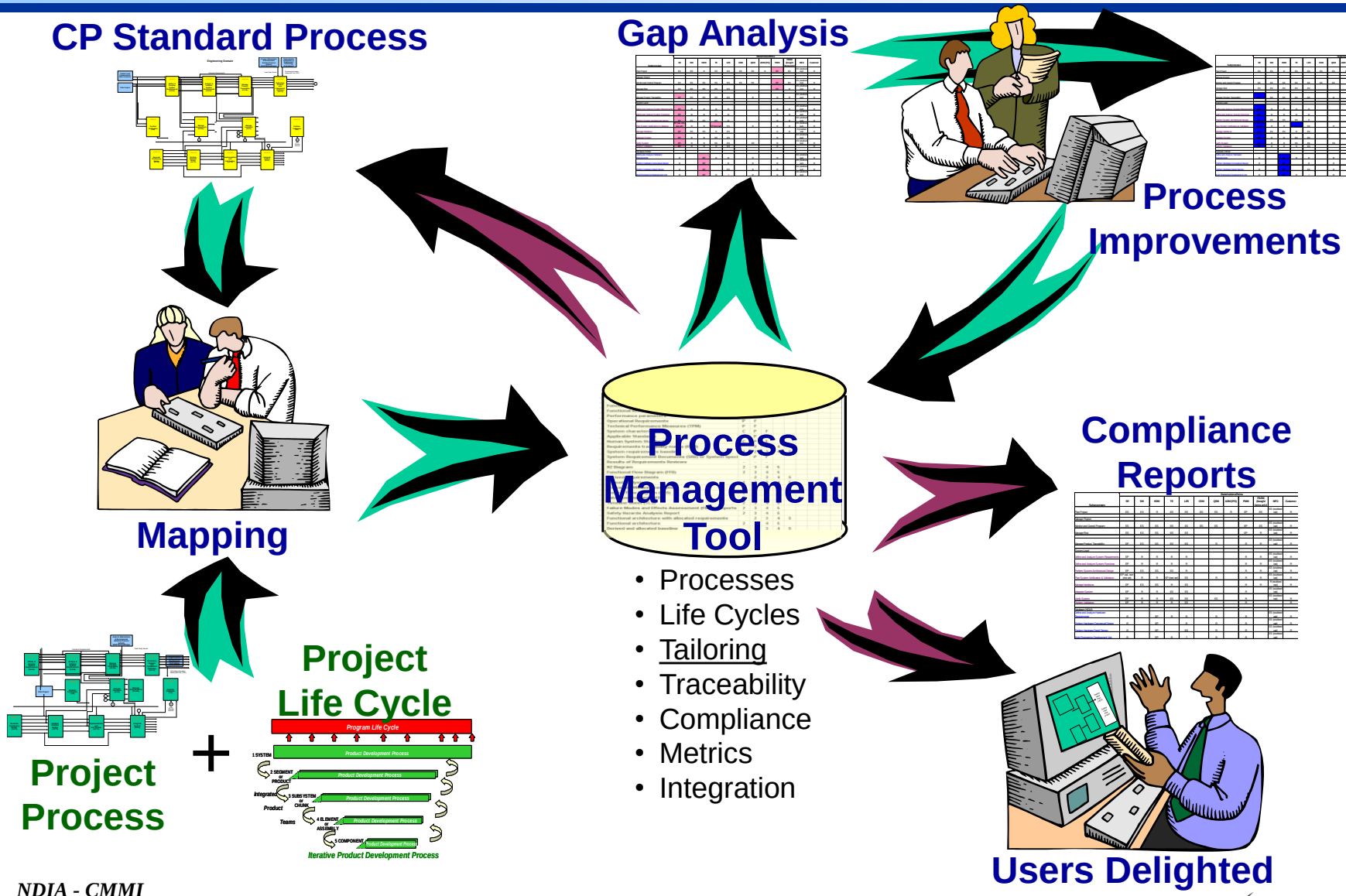

- Processes
- Life Cycles
- Tailoring
- Traceability
- Compliance
- Metrics
- Integration

Summary

CMMI Is Only Hard Because We Make It So

- We Use Brut Force
- We Should Use a Kid Glove

We can have discipline and agility at the same time

- Design a complete solution to all stakeholder needs
- Supply appropriate tools
- Understand that the system is organic
- Manage variation