Using the CMMI to Improve Contract Management

Presented By:

Gary Gumpright

November 20, 2003

DCMA
It Starts with Me

Outline

- DCMA Overview
- Why Focus on Process for Contract Management
- The DCMA Environment
- Benefits of CMMI for DCMA
- Conceptual CMMI-Based Contract Management Framework
- Sample Outputs
- Benefits of DCMA's CMMI Methodology

DCMA
It Starts with Me

DCMA Overview

- Independent combat support agency within DoD
- Contract manager for US DoD & other Federal Agencies
- Responsible for ensuring Federal acquisition programs, supplies, and services are delivered on time, within cost and meets performance requirements
- Provides direct service on DoD contracts at Contract Management Offices (CMOs) throughout CONUS and Overseas

DCMA
It Starts with Me

DCMA Overview

Defense Contract Management Agency

Scope of work

- ***All major weapons system programs***
- ***$860B in Contract "Face Value"***
- ***$116B Unliquidated Obligations***
- ***320,000 Contracts***
- ***19,000 Contractors***
- ***Flight Operations (1200 Aircraft/yr)***

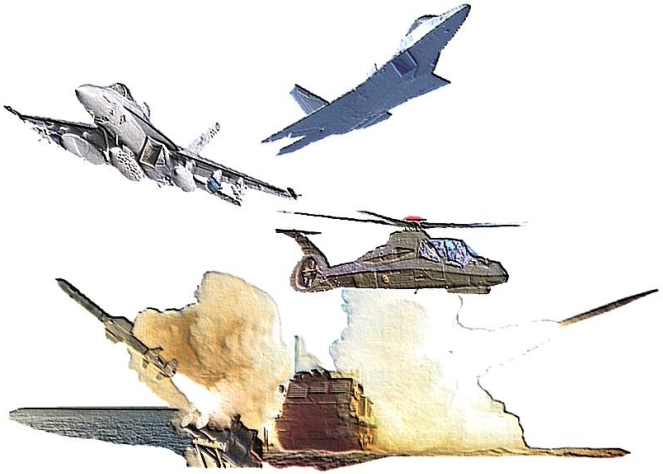

Span of Control

- ***10,635 Professionals***
- ***800 Locations Worldwide***
- ***60 Major Field Commands***
- ***$81M Reimbursable Foreign Military Sales***
- ***Combat Support Agency***

Why Focus on Process for Contract Management

- Process is a major determinant of future program Cost, Schedule and Technical performance
- Process information (both process capability and process adherence) provides a leading indicator of future program performance shortfalls (aka Risk)

We Enable the Warfighter to Win

Why Focus on Process for Contract Management

- Tri-Service Assessment Initiative (TAI) Systemic Analysis White Paper:

"It is not an exaggeration to state that process performance shortfalls are seriously impeding successful program execution."

"… nine out of every ten DoD programs assessed by TAI exhibit these process performance shortfalls that are negatively impacting a program's ability to deliver an effective system…"

"… there are two primary types of process performance shortfalls, those related to <u>process adherence</u>, and those related to <u>process capability</u>."

Process Performance = *f*{Process Capability ^ Process Adherence}

"It is now time to focus on process capability rather than process adherence"

The DCMA Environment

- DCMA is not the “typical” CMMI user
  - Responsible for oversight NOT development
    - Not seeking a benchmark “Maturity Level”
    - Primary goal is risk management and predictive analysis.
- CMMI as a tool to aid contract surveillance
  - Risk identification, handling and monitoring
  - Aid Variance Analysis
  - Support Predictive Analysis

- Independent of supplier’s Process Improvement efforts (e.g. CMM, CMMI, etc)
- Need to maintain delicate balance between “process” and “product”

Process Versus Product

TIME

At contract award:

- Little known about product…BUT can:
  - Estimate "capability" of supplier
  - Identify & assess risks
  - Identify process improvement opportunities

CMMI CAN SUPPORT BOTH!

As contract is executed:

- Emphasis changes from "capability" to "performance"
- Contract Surveillance needs to reflect this by:
  - Monitoring process adherence
  - Evaluating actual process "performance"
  - Continuously evaluating process capability and process improvement objectives

- People
- Process
- Technology

- Contractor Performance
  - Product Quality
  - Cost & Schedule

CAPABILITY Vs PERFORMANCE!

Benefits of CMMI for DCMA

- Provides a model to objectively evaluate contractors' processes
- Resultant process information can be used to identify risks and predict future performance (Predictive Analysis)
- Contractors' process capability, subsequent adherence and Performance can be continuously evaluated and monitored
- Provides a framework to collect, analyze and report process information (Capability, Adherence & Performance)
  - With this information, can attempt to correlate process capability, adherence and performance

We Enable the Warfighter to Win

Conceptual CMMI-Based Contract Management Framework

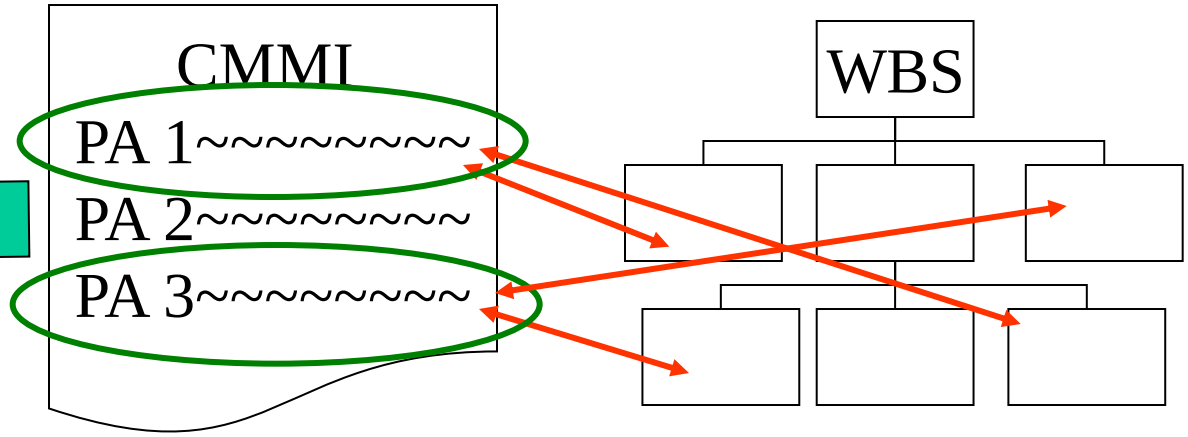

Critical Process	Priority	Program Element Mapping
PA 1	1	WBS # 1,5
PA 3	2	WBS # 2,4,6 …
PA 6	3	WBS # x, etc

Risk Identification

Risk Monitoring & Reporting

Example Output -1

WBS Ref	WBS Priority	CMMI PA's				
		RM	RD	TS	PI	…
1.1	3					
1.1.1	3	✓				
1.1.2	3		✓			
1.2	1					
1.2.1	1	✓				
1.2.2	1			✓		
Process Area Hits		2	1	1	0	…
Weight PA Priority = SUM(Mapped WBS Priority)		4	3	1	0	

Example Output -2

WBS Ref	WBS Priority	CMMI PA's					Process Measures
		RM	RD	TS	PI	…	
1.1	3						
1.1.1	3						
1.1.2	3						
1.2	1						
1.2.1	1						
1.2.2	1						
Process Area Hits		2	1	1	0	…	
Weight PA Priority = SUM(Mapped WBS Priority)		4	1	3	0		

Incremental Process Evaluation Results					

Example Output -3

WBS Ref	WBS Priority	CMMI PA's					Process Measures	Other Measures	
		RM	RD	TS	PI	…			
1.1	3							EV	TPM
1.1.1	3								
1.1.2	3								
1.2	1								
1.2.1	1								
1.2.2	1								
Process Area Hits		2	1	1	0	…			
Weight PA Priority = SUM(Mapped WBS Priority)		4	1	3	0				
Incremental Process Evaluation Results									

We Enable the Warfighter to Win

DCMA
It Starts with Me

Example Output - 4

WBS Number				Inputs					CMMI PAs														Metrics						
L1	L2	L3	L4	Value ($K)	Risk Level	Scheduled Start Date (Months)	Critical Path?	Priority	PP	PMC	RSKM	IPM	IT	SAM	ISM	QPM	REQM	RD	TS	PI	VER	VAL	CMMI	TRL/TML	Complexity Level	TPM 1	TPM 2	CPI (Cum)	SPI (Cum)
10000				2000																									
	12000			1500																									
		12200		1000																									
			12210	75	H	0	Y	5	1	1		1												3	H			1.1	1.0
			12212	32	M	22	N	2				1		1	1									3	H			0.7	1.0
			12213	22	L	12	N	1									1	1						6	L			1.0	0.9
			12214	68	H	3	Y	5											1	1				4	M			0.9	0.8
			12215	57	M	0	Y	4	1		1													5	M			0.9	1.0
								Process Area Hits	2	1	1	2	0	1	1	0	1	1	1	1	0	0							
								Weighted PA Priority = SUM(WBS Priority x PA Influence)	9	5	4	7	0	2	2	0	1	1	5	5	0	0							
								CMMI Appraisal Results																					

LEGEND:

CMMI: Capability Maturity Model Integration
CPI: Cost Performance Index
CUM: Cumulative
SPI: Schedule Performance Index

TRL: Technical Readiness Level (H/W)
TML: Technical Maturity Level (Software)
TPM: Technical Performance Measure

Example Weighted Process Area Priorities

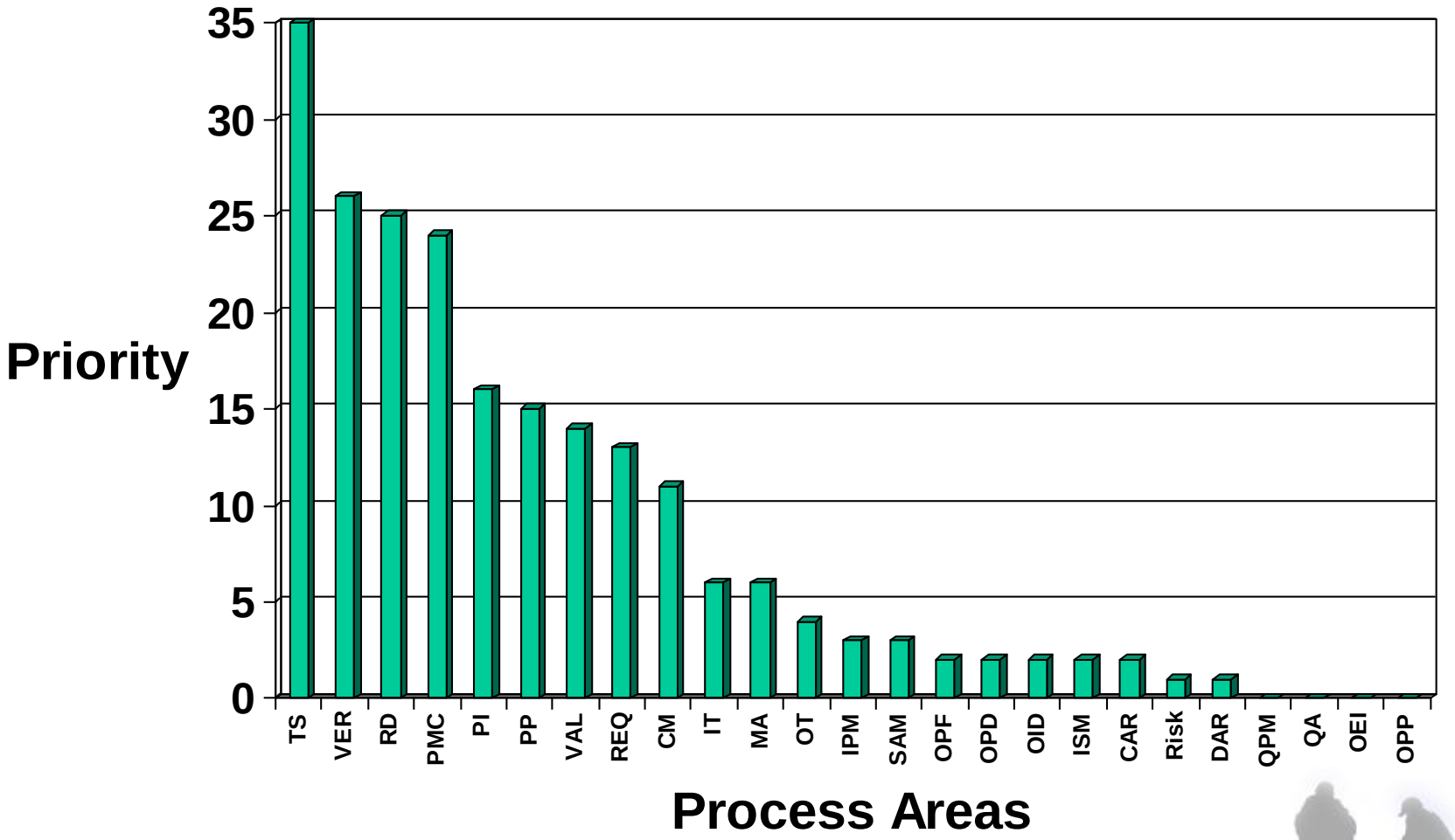

We Enable the Warfighter to Win

Sample CMMI-based Surveillance Plan

PA	PA Name	Resp	Sched	CMMI Ref	Surveillance Questions	Observation / Finding	Evidence
PP	Project Planning	PI Eng	10/03	SG 1 Establish Estimates			
				SP 1.1-1 Estimate the Scope of the Project	1. Is there an up to date product-based WBS? 2. Is the planned scope of work decomposed to a sufficient level of detail to enable accurate estimates?	1. ~~~~~~~~ 2. ~~~~~~~~	1. ~~~~~~~ 2. ~~~~~~~
				SP 1.2-1 Establish Estimates of Work Product and Task Attributes	1. How was the size of work products and tasks performed estimated	…	…
				SP 1.3-1 Define Project Life Cycle	…		
		SW	10/03	…			

Benefits of DCMA's CMMI Methodology

- Aligns process surveillance and relates process capability to program objectives
- More efficient use of resources by targeting effort on the higher priority processes
- Process information is integrated with other key measures (such as EV, TPMs etc)
- Improved program insight through analysis of process capability and its impact on future program performance (Risk)
- Helps remove "Maturity Level Blinders"

We Enable the Warfighter to Win

Questions

Contact Information

Gary Gumpright
(617) 753 4130
gary.gumpright@dcma.mil

Kathy Lundeen
(703) 428 1830
kathy.lundeen@dcma.mil

Matt Ashford
(703) 428 1167
matt.ashford@dcma.mil

Agency: www.dcma.mil