Impact of CMMI on Systems Engineering

Dev A. Banerjee

Boeing – Integrated Defense Systems

November 18, 2003

Outline

- Systems Engineering (SE) Evolution
- Clear Understanding of SE
- Detractors for Deploying CMMI
- Boeing is Committed to CMMI
- Boeing Enterprise Process Model
- CMMI is Means to Greater Commonality
- CMMI is an Opportunity for SE

Systems Engineering is Evolving

1950 → 2003 → 2030

Implementations

Simple Analog Hardware → Complex, Interactive, Software Intensive, Interoperable Systems → Self-Organizing Ad Hoc Network Systems

Paradigm Shift

Individual Systems Engineer → Team Focus IPT'S → Multidisciplinary Teams Following Integrated Processes (CMMI) → Multi National / Company Teams

Domains

C → C^2 → C^3 → C4ISR

Stand Alone Systems → Command, Control, Communications, Computers, Intelligence, Surveillance → Interconnected Systems, Counter Intelligence, Security, Misinformation, Information Isolation

SE Approaches

Structured Analysis & Functional Decomposition → UML Modeling → SoSE Considerations (JTA, Interoperability, DoD Architectural Views)

Process Standards

Ad Hoc Processes → MIL–STD 499 → EIA–632 & 731 IEEE-1220 → CMMI → Use of Self-Tailoring Expert System / Intelligent Process Tools

Tools

Simple, Disconnected Models → Integrated Tool Suites Interconnected Performance Models, Data Bases & Data → Intelligent / Adaptive Tools

In Spite of Progress There Remains a Nagging Looseness of Systems Engineering

- What is it?
- Who does it?
- How do we measure success?
- How does “this vagueness” fit into CMMI?
- Does CMMI have the flexibility to address all aspects of SE? e.g.---
  - System of Systems considerations?
  - Spiral development?
  - Engineering specialties?

Typical Detractors for Deploying CMMI

- Lack of **hard cost/benefit data** encourages CMMI skeptics
- Broad understanding of **value of better Systems Engineering** lacking
- CMMI adds “another burden” to the **growing list of assessment processes** for programs:
  - ISO
  - Lean
  - Malcolm Baldrige
  - Best Practices
  - Six Sigma
- **Insufficient funding** for process improvement
- Lack of **top management support**

At Boeing-IDS, CMMI is Viewed as an Opportunity for Integration

- Recent merger of Aircraft & Missiles and Space and Communications to form Integrated Defense Systems (IDS)
  - Combines 14 sites across the country into one business unit
- IDS focus on System of Systems and Network Centric Operations
- Process model developed to reflect the new IDS organization
  - Process model is the foundation of commonality
  - Engineered the new IDS processes to be CMMI compliant
- Management is committed to the value of SE and transition to CMMI
- Focus consistent with Boeing Vision 2016 core competency
  - Large-scale systems integration

IDS Process Model is the Operations View and the Foundation of Commonality

Rev. A

5 Dec 02

Integrated Defense Systems Enterprise Process Model

1.0 Manage Enterprise — Process Owner: EIB

- 1.01 Ensure Integration of Strategic Business & Functional Planning
- 1.02 Ensure Organizational Effectiveness
- 1.03 Ensure Quality & Mission Assurance
- 1.04 Provide Integrated Process Assessment & Continuous Improvement
- 1.05 Perform Integrated Business Financial Management
- 1.06 Communicate IDS Positions & Direction
- 1.07 Integrate & Deploy Processes & Procedures
- 1.08 Perform Self-Governance
- 1.09 Ensure Customer Satisfaction

2.0 Manage Programs — Process Owner: Program Management

- 2.01 Manage Program Planning
- 2.02 Administer Contracts
- 2.03 Minimize Program Risk
- 2.04 Manage IWA Performance
- 2.05 Manage Cost & Schedule

3.0 Create, Acquire & Grow Business — Process Owner: BD

- 3.01 Create Opportunities & New Markets
- 3.02 Acquire New Business
- 3.03 Grow / Maintain Existing Business

4.0 Integrate Product/Service Definition — Process Owner: Engineering

- 4.01 Define & Manage Product/Service Requirements
- 4.02 Plan & Control Product/Service Development & Definition
- 4.03 Concurrently Develop Product/Service Build-to/Buy-to/ Support Elements
- 4.04 Verify & Validate Products/Services

5.0 Manage Suppliers — Process Owner: SM&P

- 5.01 Define Supplier Requirements
- 5.02 Select Source
- 5.03 Negotiate & Award Purchase Contracts
- 5.04 Manage Supplier Performance
- 5.05 Manage Supplier Quality
- 5.06 Manage Supply Base

6.0 Produce Product — Process Owner: Ops

- 6.01 Define Production Plan
- 6.02 Provide Parts, Supplies, GFP, & Tools to Assembly
- 6.03 Assemble and Deliver Product
- 6.04 Verify Production Processes

7.0 Support Products & Services — Process Owner: Product Support

- 7.01 Provide Supply Support
- 7.02 Provide Field Services
- 7.03 Provide Retrofit & Modification Services
- 7.04 Provide Technical Data
- 7.05 Provide Training Systems
- 7.06 Provide Integrated Support Planning & Management
- 7.07 Provide System Support Analysis
- 7.08 Provide Support Equipment

8.0 Provide Enabling Infrastructure — Process Owner: EIB

- 8.01 Provide Financial Services
- 8.02 Provide Human Resources Services
- 8.03 Provide Communications Services
- 8.04 Provide Legal Services
- 8.05 Provide Safety, Health, and Environmental Services
- 8.06 Provide Ethics Guidance
- 8.07 Ensure Export Compliance
- 8.08 Manage Facilities & Equipment
- 8.09 Provide Security & Fire Protection Services
- 8.10 Provide Integrated Information Systems & Services
- 8.11 Manage Non-Production Procurement

Functional Process Council Legend for Tier 1 boxes:

Business Dev.	Communications	Contracts	EIB	Engineering	Ethics	Finance	HR	Info. Tech.	Legal	Operations	Prog. Mgmt.	Q&MA	SM&P	Support

CMMI Collaboration Across IDS is Providing An Evolutionary Path To Greater Commonality

IDS Enterprise Process Model

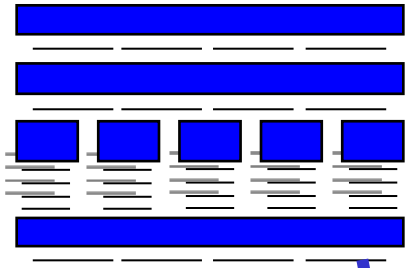

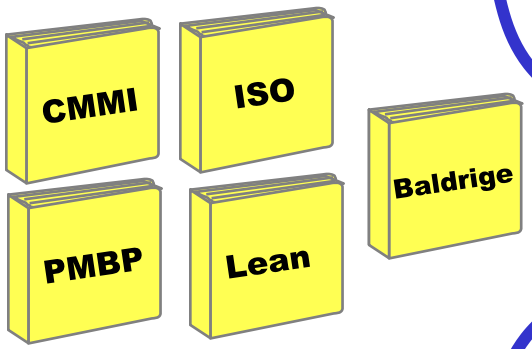

Existing Site Procedures

CMMI Activities and Assets Organized for PM, SE, SW, & SM Product Teams

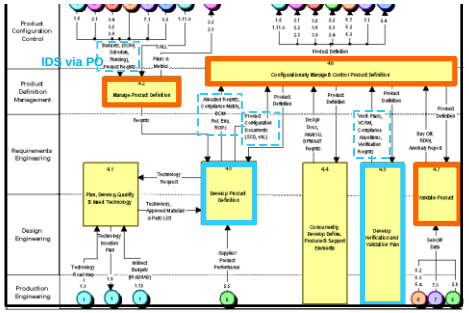

- Approach covers the critical front-end of new products
- Management and control of these activities are included
- Site/BU support to programs is the core concept

Focus Is On the User

Product teams are provided everything required at start

Disciplined performance is the easiest and most efficient way to work

CMMI is an Opportunity for Strengthening SE Across Industry

- All necessary **SE elements can be included**
- Provides a **common baseline** and vocabulary **for process improvement**, including assessments
- Provides opportunity to integrate and **strengthen SE** on all development programs
- An estimated 80% of the effort in transitioning to CMMI is in the area of SE, however---
  - CMMI implementation and assessments still have a decided "software" centric spin
- **DoD commitment** is growing (AF Sec Sambur's policy memo; Institute for SE, etc)

Boeing-IDS is Committed to CMMI to Enhance our Performance

Back Up

CMMI End State

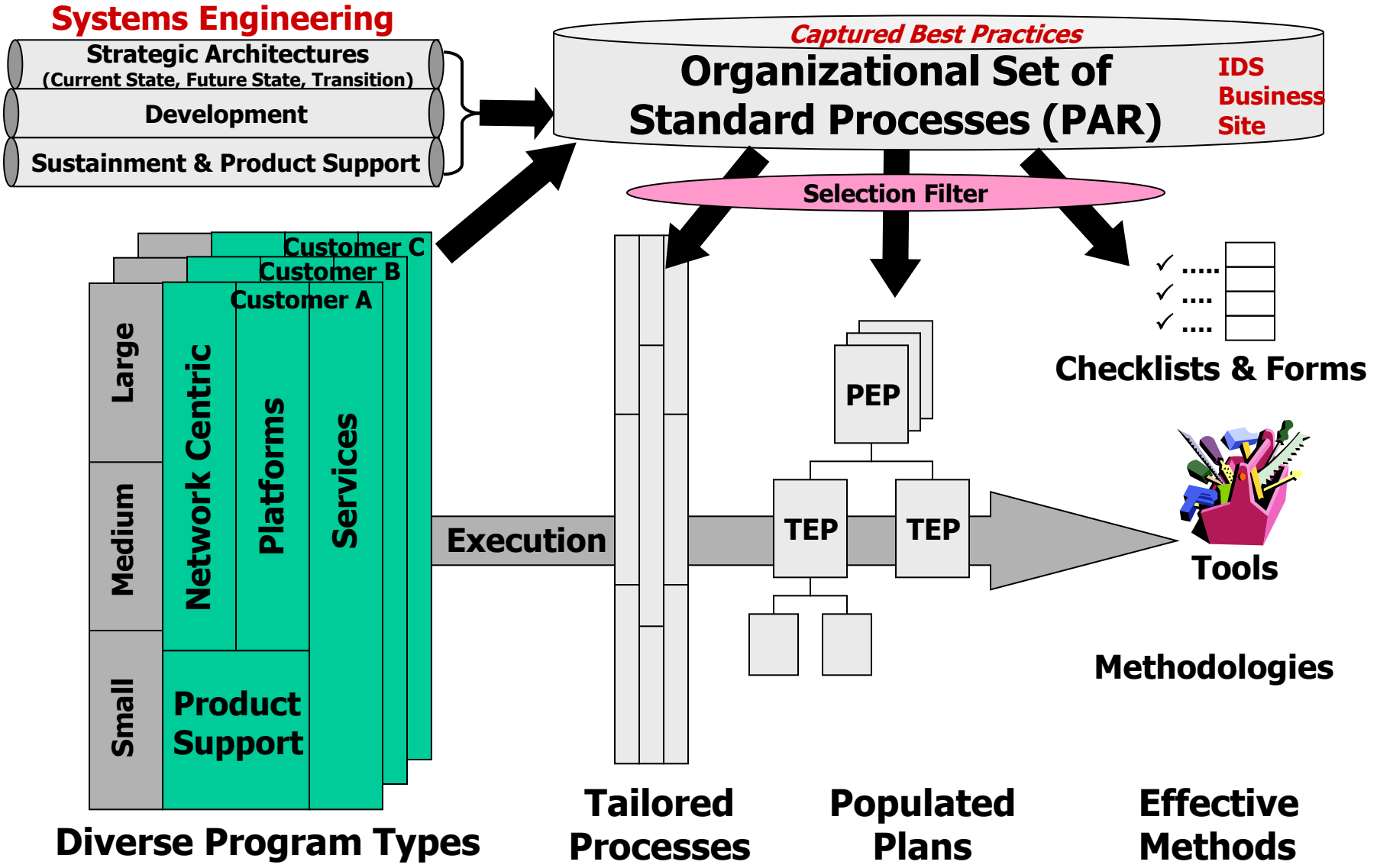

CMMI Facilitates Sharing and Commonality Across the Enterprise