ERDC/CRREL TR-13-9

Cold Regions Research and Engineering Laboratory

US Army Corps of Engineers®
Engineer Research and Development Center

National Science Foundation, Arctic Sciences Program (ARC)

Ice Column Design Concept for Summit Station

Laboratory Testing Results

Amy M. Burzynski, Jason C. Weale, and Lynette Barna

June 2013

Approved for public release; distribution is unlimited.

Engineering for Polar Operations, Logistics,
and Research (EPOLAR) Program
Arctic Sciences Program (ARC)

ERDC/CRREL TR-13-9
June 2013

Ice Column Design Concept for Summit Station

Laboratory Testing Results

Amy M. Burzynski, Jason C. Weale, and Lynette Barna

Cold Regions Research and Engineering Laboratory
U.S. Army Engineer Research and Development Center
72 Lyme Road
Hanover, NH 03755

Approved for public release; distribution is unlimited.

Prepared for National Science Foundation Office of Polar Programs Arctic Research Support and Logistics Program

Abstract

Elevated structures in polar regions must be lifted periodically to maintain clearance above the snow surface. At the 2010 Lift Systems Workshop sponsored by the National Science Foundation, Sadler (2010) presented a design concept for a building lift system that uses ice columns for support. We conducted laboratory tests of Sadler's heated slip form footer design concept at temperature conditions representing those at Summit Station, Greenland (–20°C [–4°F]). We explored its ability to 1) form an ice column and 2) be heated and lifted up through snow. Additionally, we 3) accessed the heater through the maintenance panel, and 4) conducted expedient compression tests on the resultant ice column. These tests revealed significant technical challenges. We were able to work around them to grow a continuous, two-segment ice column, heat and lift the slip form up through 23 cm (9 in.) of compacted snow, and successfully remove and replace the maintenance panel. Based on the significant compression strength achieved with this technique, we recommend evaluating the combination of in-situ resources (i.e., snow, ice, and water) for use as foundation construction materials in polar regions. Accommodating both high compressive and high tensile forces will be particularly challenging. Initial guidance suggests maintaining snow and ice at or below –20°C (–4°F) at all times; higher temperatures cause rapid increases in settlement and compression rates.

DISCLAIMER: The contents of this report are not to be used for advertising, publication, or promotional purposes. Citation of trade names does not constitute an official endorsement or approval of the use of such commercial products. All product names and trademarks cited are the property of their respective owners. The findings of this report are not to be construed as an official Department of the Army position unless so designated by other authorized documents.

DESTROY THIS REPORT WHEN NO LONGER NEEDED. DO NOT RETURN IT TO THE ORIGINATOR.

Table of Contents

Abstract ii

List of Figures and Tables iv

Preface v

Unit Conversion Factors vi

1 Introduction 1

2 Test Setup 3

3 Can We Form an Ice Column? 5

3.1 Methods 5

3.1.1 Trial 1: compacted snow base 5

3.1.2 Trial 2: ice base, full 6

3.1.3 Trial 3: ice base, discontinuous 7

3.1.4 Trial 4: ice base, continuous 9

3.2 Discussion 9

4 Can We Heat and Lift the Footer up Through Snow? 12

4.1 Methods 12

4.2 Discussion 14

5 Accessing the Heater through the Maintenance Panel 15

5.1 Methods 15

5.2 Discussion 15

6 Compression Testing 16

7 Conclusions 18

8 Recommendations and Additional Considerations 19

References 21

Appendix A: Electrical Schematic 22

Appendix B: Temperature from Thermocouples 23

Appendix C: Compression Test 24

Report Documentation Page

List of Figures and Tables

Figures

Figure 1. Sadler's design concept (2010)..... 2

Figure 2. The slip form footer has a heat "blanket" inside the wall of its base. 3

Figure 3. We conducted tests in a –20°C cold room..... 4

Figure 4. When we attempted for form an ice column on a compacted snow base most of the liquid leaked out the bottom, leaving only a thin shell above the surface..... 6

Figure 5. For the second trial we set the footer on a solid ice base..... 7

Figure 6. Water leaked out while forming a frozen seal prior filling the footer 8

Figure 7. The resultant ice column was discontinuous, with a wide fracture above the sealant layers (in blue) at the base of the top segment. 8

Figure 8. We were able to form a continuous two-segment ice column on a solid ice base..... 9

Figure 9. Fractures formed in the ice whenever we added near-freezing water or turned on the heater. 11

Figure 10. We buried the footer 9 in. deep in compacted snow..... 13

Figure 11. Continuous two-segment ice column during compression testing in the MTS machine at –20°C. 16

Tables

Table 1. We applied increasing loads over 20–30 minute intervals until brittle failure..... 17

Preface

These tests were conducted for the National Science Foundation, Office of Polar Programs (NSF-OPP), Arlington, VA.

The work was performed by Amy M. Burzynski, Jason C. Weale, and Lynette Barna (Force Projection and Sustainment Branch, Dr. Edel Cortez, Chief) of the Research and Engineering Division, U.S. Army Engineer Research and Development Center–Cold Regions and Engineering Laboratory (ERDC-CRREL). At the time of publication, Dr. Justin Berman was Chief, Research and Engineering Division; and Kevin Knuuti was Technical Director for Earth Sciences and Engineering. The Deputy Director of ERDC-CRREL was Dr. Lance Hansen, and the Director was Dr. Robert E. Davis.

The authors thank Zoe Coureville, Bill Burch, and all members of the snowmaking team (ERDC-CRREL) for their support throughout this project; they enabled testing in conditions representing those at Summit. They thank Doug Punt of ERDC-CRREL for his technical expertise in wiring a power source and data monitoring system for the prototype, and Glenn Durell of ERDC-CRREL for his technical expertise in utilizing the MTS machine for compression testing.

This research was supported in part by an appointment to the Postgraduate Research Participation Program at the U.S. Army Engineer Research and Development Center–Cold Regions Research and Engineering Laboratory administered by the Oak Ridge Institute for Science and Education through an interagency agreement between the U.S. Department of Energy and ERDC-CRREL.

COL Kevin J. Wilson was the Commander and Executive Director of ERDC, and Dr. Jeffery P. Holland was the Director.

Unit Conversion Factors

Multiply	By	To Obtain
feet	0.3048	meters
inches	0.0254	meters
pounds (force)	4.448222	newtons
pounds (force) per square inch	6.894757	kilopascals
pounds (mass)	0.45359237	kilograms

1 Introduction

Extreme environmental conditions present unique design challenges in polar regions. In response to accumulating and drifting snow, many structures are elevated above the snow surface and must be lifted periodically to maintain clearance. In September 2010, the National Science Foundation (NSF) sponsored a Lift Systems Workshop to promote collaboration and dialogue among international experts while garnering design insights for the Summit Station Model 5 Concept (Weale et al. 2011). The Model 5 Design Concept features new facilities for long term atmospheric studies at Summit Station, Greenland (Kumin Associates and CH2MHill 2010; Dibb et al. 2012). At this workshop Sadler (2010) presented a design concept for a building lift system that uses ice columns for support. Hagemeister and Kötteritzsch (2010) tested a similar concept for the German Antarctic station Neumayer III. This system holds potential benefits of environmental sustainability and financial savings by using ice instead of metal as a support material. We recognize significant challenges should this concept move forward: namely, an ice column's weak to resistance to lateral forces, the potential for brittle failure of freshwater ice, and (as with snow) the necessity to maintain ice at low temperatures (preferably –20°C (–4°F) and below) to prevent rapid creep (compression) within the column. A temperature of -20° C (–4°F) represents the snow conditions we would expect to encounter at 2m depth during summertime construction at Summit Station (Steffen et al. 1996).

In Sadler's (2010) design (Fig. 1), a hollow footer is buried below the snow surface then filled with an ice/water slurry and set to freeze. When the building needs to be lifted, the outer wall of the cylindrical footer is heated and tension (lift forces) is applied to melt it upward through the snow. The footer is again filled with an ice/water slurry, generating an additional segment of the ice column. Multiple ice columns would be used to support the building, as determined by load requirements. A first-generation plastic prototype melted in preliminary testing because of unregulated heaters. Here we present laboratory testing results for a second-generation aluminum prototype. Both prototypes were provided directly by Sadler. These tests were conducted at the Cold Regions Research and Engineering Laboratory (CRREL) for the National Science Foundation, Office of Polar Programs (NSF-OPP).

Under temperature and snow conditions representing those at Summit, we address 1) the ability of this design to form an ice column and 2) to melt upward through snow when lifted, as well as 3) accessibility to the heater through the maintenance panel, and 4) our ability to regulate the heater through the power supply. We further characterize the resultant ice column with 5) an expedient compression test. Based on our findings, we provide recommendations for future testing and design.

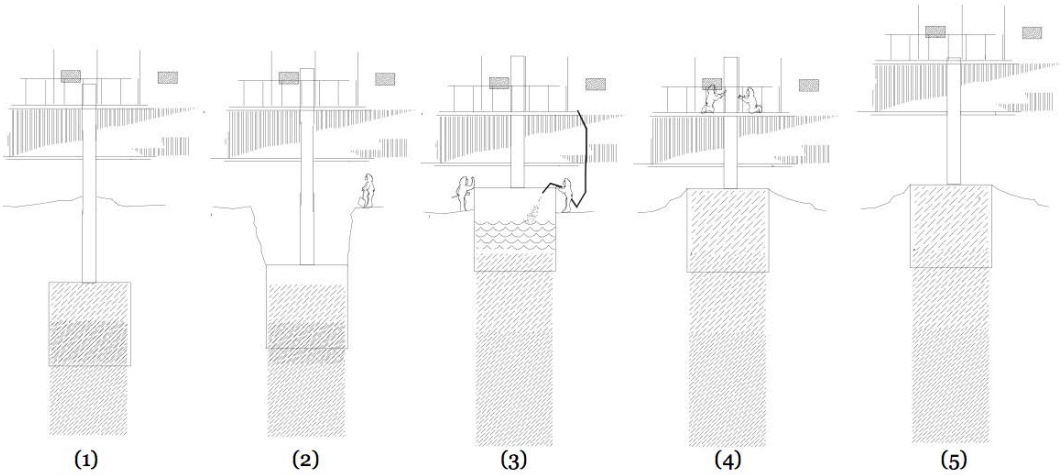

Figure 1. Sadler's design concept (presented at the Lift Systems Workshop, 2010): (1) Initial ice column covered by snow accumulation and drift requires lift. (2) Footer melting its way up through snow. (3) Slurry added to slip form to lengthen the ice column. (4) "New" ice frozen; structure ready for jacking. (5) Completed lift—note building is higher above the existing snow surface.

2 Test Setup

The prototype, as sent by the vendor, is a cylindrical, aluminum slip form footer with heat tracing inside the wall of the base (Fig. 2). It is 67.3 cm (26.5 in.) tall overall, with a height of 22.8 cm (9 in.) to the top of the base. The diameter is 17.8 cm (7 in.) at the base and 3.8 cm (1.5 in.) at the access tube and the unit weighs 5.4 kg (12 lb).

We connected the heater to a power supply and used a data logger with five copper-constantan (type T) thermocouples to regulate energy output from the heater and to monitor ambient air and snow temperatures. Each time we filled the footer with water, we dropped a thermocouple inside to monitor cooling and freezing. When the heater was turned on, the data logger recorded temperature measurements at 10-second intervals; when the heater was off, it recorded at 60-second intervals. An electrical schematic of the monitor and control circuit is presented in Appendix A.

Figure 2. Slip form footer (left) has a heat "blanket" (right) inside the wall of its base.

We made snow in our test facility and conducted all tests at –20°C (–4°F) to represent the snow conditions we expect to encounter at 2-m depth during summertime construction at Summit Station (Steffen et al. 1996). The footer was suspended from a boom over a chest freezer and was raised and lowered with a hand crank winch (Fig. 3). We recorded each test with a video camera mounted inside the freezer.

Figure 3. Tests conducted in a –20°C (–4°F) cold room. We suspended the footer (right) from a boom over a chest freezer and controlled its height with a hand-crank winch (left).

3 Can We Form an Ice Column?

3.1 Methods

3.1.1 Trial 1: compacted snow base

We sifted the dry snow to make it as uniform as possible, filled the base of the freezer with a layer of snow ~11.4 cm (4.5 in.) deep, compacted it with a wooden block, and let it sinter overnight to a density of ~0.51. We measured density using a 100 cm^3 Taylor-LaChapelle density cutter. Initially, we mixed an ice/water slurry, but the snow stuck together in chunks and blocked the narrow, 3.8-cm (1.5-in.) diameter fill tube when we poured it into the footer. As an alternative, we chose to use liquid water from the slurry at a temperature near 0°C (32°F). The main advantage of using a snow/water slurry is shorter freezing time; the snow displaces volume that would otherwise be filled by water and removes sensible heat (Coutermarsh and Phetteplace 1985). By using liquid water from the slurry, we obtained the benefit of near-freezing temperatures but paid a penalty of slightly increased freezing time. At full scale, this issue would likely be eliminated because the fill tube would be large enough to prevent blockage.

We set the footer into the compacted snow base, approximately 0.64 cm (0.25 in.) deep, then slowly poured about 1 L (0.26 gal.) of near-freezing water from the slurry, mixed with a couple drops of blue food coloring to improve visibility. The depth of 0.64 cm was arbitrary, but sufficient to provide enough distance between the bottom of the column and the bottom of the compacted snow base to illustrate the migration of pore water (in this case, the slurry) through the pore spaces in relatively densely compacted snow. The initial liter of water was intended to form a frozen seal at the base of the footer. After the first liter froze, we filled the footer with an additional 5 L (1.32 gal.) of blue water. We observed a few small leaks on the snow surface around the edge of the footer base, but they appeared to stop growing after about 10 minutes. We let the water freeze overnight. The next morning we heated the footer for about 45 seconds and then lifted it with the hand crank. This revealed only a thin shell of the outer base of the footer; most of the water leaked out the bottom into the compacted snow (Fig. 4).

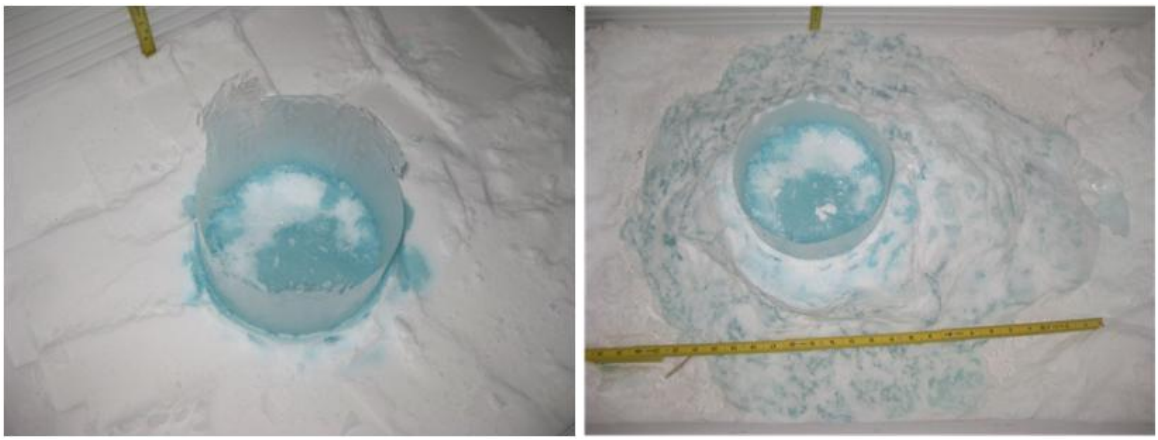

Figure 4. Attempt to form an ice column on a compacted snow base: most of the liquid leaked out the bottom (right), leaving only a thin shell above the surface (left).

3.1.2 Trial 2: ice base, full

For the second trial, we formed an ice base 10 cm (4 in.) deep in a chest freezer, with the bottom of the footer frozen into the ice approximately 0.63 cm (0.25 in.) deep to prevent liquid from leaking out. We poured in 1 L (0.26 gal.) of blue water to form a seal at the base of the footer and let it sit to freeze, and then filled the footer with 4 L (1 gal.) of blue water. Once the ice column was frozen, we turned on the heater and lifted the footer up 12.7 cm (5 in.). The ice column partially broke off during lifting. The resulting column was 10 cm (4 in.) tall; the rest of the column remained inside the footer, frozen to the top plate (Fig. 5).

Figure 5. Second trial: we set the footer on a solid ice base (top). The resulting ice column froze to the unheated top plate (bottom, right) and partially broke off during lifting (bottom, left).

3.1.3 Trial 3: ice base, discontinuous

To avoid another broken column, we filled the footer to about 2.54 cm (1 in.) below the top plate rather than to the top as in section 3.1.2. This allowed for ice expansion during the freezing process. We set the footer on an ice base, poured 0.25 L (0.07 gal.) of clear water to form a frozen seal, then added another 4.5 L (1.19 gal.), and let it freeze. We heated and lifted the footer, revealing an ice column 16.5 cm (6.5 in.) tall, without any ice remaining inside the footer. We set the footer back down overlapping approximately 2.54 cm (1 in.) onto the first column segment. We poured in 0.25 L (0.07 gal.) of blue water to form a frozen seal, but needed to repeat this process two more times, because of leaks, to create a water tight seal (Fig. 6).

Figure 6. Water leaked out while forming a frozen seal prior filling the footer. We formed a watertight seal by pouring low volumes of near-freezing water in three consecutive rounds.

We then poured 4.5 L (1.19 gal.) of clear water to fill the footer. After it froze, we heated and lifted the footer, revealing a second segment of the ice column. The two segments were discontinuous, with a gaping fracture above the sealant layers at the base of the second segment (Fig. 7).

Figure 7. The resultant ice column was discontinuous, with a wide fracture above the sealant layers (in blue) at the base of the top segment.

3.1.4 Trial 4: ice base, continuous

In the final attempt to form an ice column, we chose to use only clear water, in case the drops of food coloring contained propylene glycol (typical of many food coloring products) that could have affected the freezing process in Trial 3. We set the footer on an ice base and poured 0.25 L (0.07 gal.) of near-freezing water inside to form a seal. After it froze, we poured 4.5 L (1.19 gal.) of clear water to form the first ice column segment. Once it was solidly frozen (determined by monitoring internal thermocouples), we heated and lifted the footer to observe a column 16.5 cm (6.5 in.) tall. After the footer cooled down, we lowered it approximately 1 in. onto the first segment and then poured 0.25 L (0.07 gal.) of clear water to form a frozen seal. As with the previous trial (no. 3), the first two seals leaked in a few places but the third 0.25-L (0.07-gal.) seal did not leak. We then poured 4.5 L (1.19 gal.) of water and let it sit to freeze. Heating and lifting the footer revealed a continuous ice column 33 cm (13 in.) tall (Fig. 8).

Figure 8. Continuous two-segment ice column on a solid ice base.

3.2 Discussion

This series of tests exposed several significant technical challenges with the prototype design and methodology; however, we were able to work around them to grow a continuous two-segment ice column. Temperature measurements collected throughout this test are shown in Appendix B.

The first challenge we encountered was losing water through pore spaces and melting of the snow beneath the base of the footer, despite compacting the snow to a density of approximately 0.51. We solved this issue in the laboratory test by using an ice base in place of compacted snow. An impermeable base layer would be necessary in the field. Further studies should investigate methods, materials, and depths required to provide an impermeable base layer for initial column placement as this concept moves forward.

Second, we were not able to fully fill the footer because its top plate was not heated. When completely filled, the ice column froze to the top of the heater and broke off part way down during lifting. Lack of heat on the narrow access tube caused water to freeze, clogging the tube during filling. Additionally, the footer did not heat evenly. Each time we turned on the heater, we felt the outer surface and observed temperature variations. Often one or two patches felt cooler than the rest of the heated surface.

Third, leaking is of concern when filling the footer. It took three attempts of adding 0.25 L (0.07 gal.) of near-freezing water to create a complete seal between the slip form footer and the existing ice column segment.

Fourth, we observed fractures in the ice base and in the column whenever we poured in water or heated the footer (Fig. 9). The fracturing occurred while the slip form footer was in place, so we could not see it happening but we could hear cracking. These fractures were likely caused by thermal gradients during the freezing process. As this concept moves forward, further studies should research and explore the effects of such fractures on the strength and integrity of the ice column as a support structure. Additionally, we recommend tests that add smaller volumes of water more frequently (versus all at once) to determine if this method reduces the amount and severity of thermal crack formation and propagation.

Figure 9. Fractures formed in the ice whenever we added near-freezing water or turned on the heater.

4 Can We Heat and Lift the Footer up Through Snow?

4.1 Methods

We conducted a preliminary test to determine whether or not the footer could melt its way up through compacted snow with applied upward tension. We placed it 10 cm (4 in.) below the surrounding snow surface and compacted the snow as we buried it. The snow pile had a density of about 0.35 before compaction and approximately 0.53 after. When the footer was cold and buried, we applied a significant tension of ~65.8 N (~14.8 lbf) but were unable to lift it. We were able to easily lift the footer 2 minutes after turning on the heater. It is interesting to note that the footer broke the snow above it (mechanically) with little resistance (as opposed to slowly melting upward). The snow bonds directly above the footer were likely weakened by heat conducting and convecting away from the footer.

For the main test, we suspended the footer from the boom, controlled with a hand-crank winch, and set it on a solid ice base. The setup was identical to the ice column formation tests. We poured in 0.25 L (0.07 gal.) of near-freezing water to form a frozen seal, and then added an additional 4.5 L (1.19 gal.).

Once frozen, we heated and lifted the footer to observe the resultant 16.5-cm (6.5-in.) tall ice column. No ice was frozen to the interior of the footer. After the footer cooled down we lowered it back onto the ice column and buried it 23 cm (9 in.) deep with snow (sifted for uniformity). We let the snow sit overnight to sinter to approximately 0.51 density. The next day we heated the footer and lifted it up through the entire 23-cm (9-in.) layer of compacted snow over a period of 45 minutes. It melted up gradually with the applied tension (~80.5 N [18.1 lbf]), and then broke through the top 10–13 cm (4–5 in.) of compacted snow as it did during the preliminary test (Fig. 10).

a.

b.

c.

Figure 10. Footer buried 23 cm (9 in.) deep in compacted snow (a). The heated footer moved up gradually with the applied lifting tension (b) then broke through the top 10-13 cm (4–5 in.) of snow (c).

4.2 Discussion

With an applied lifting tension of approximately 80.5 N (18.1 lbf), as determined by the winch, we were able to slowly lift the heated footer up through compacted snow. Temperature measurements collected throughout this test are shown in Appendix B. Any energy required for compaction during melt-out or bond strength of the snow during mechanical breakage was not accounted for in the concept test. Here, like in the ice column formation tests, heat on the top plate and up the fill tube would be beneficial. The prototype is made of aluminum, which has a rate of thermal conductivity about 6 times higher than that of the proposed steel full-scale footer. Further studies should assess the energy input and time required to lift the footer as a function of burial depth and snow density. The associated loads on the welded joint where the base of the footer meets the tube require calculation as well. Though not quantified, this process identified issues relating to the strength requirements of breaking through upper layers of snow at full scale, and whether the gap between the column and surrounding snow, after lifting, would need to be filled to maintain the ice column's structural integrity.

5 Accessing the Heater through the Maintenance Panel

5.1 Methods

At –20°C (–4°F) we removed the 0.64-cm (0.25-in.) screws and pulled off the outer maintenance panel. The outer panel partially tore the heater off at a seam where the two were glued together. The panel was difficult to open wide enough to replace in the cold.

5.2 Discussion

We recommend future designs to consider modifications to improve the ease of removal and replacement of the maintenance panel. For example, consider using multiple, modular panels instead of one continuous panel; use bolts instead of 0.64-cm (0.25-in.) screws; and do not glue or attach the panel to the heater.

6 Compression Testing

We conducted a compression test at –20°C (–4°F) in the MTS machine to qualitatively evaluate the integrity of the continuous, two-segment ice column. Freshwater ice is particularly vulnerable to brittle failure, and upon initial formation of the column, we observed internal fractures, entrained air/gas bubbles, and a visible joint between the two segments (Fig. 11). In limited quantities, the air/gas bubbles can make it difficult for initial crack propagation throughout the column (Sodhi 2013). A series of creep rate vs. applied stress tests would need to be conducted on multiple samples and compared with previously published, bubble-free creep rate data to determine whether or not the ice columns produced by this method share those properties (Cole 2012). In any case, a long-term, vertical load applied on a column of ice will eventually cause the column to buckle because of the lack of tensile stress resistance of ice (Sodhi 2013). The resulting buckle failure may not be instantaneous, but it would likely be catastrophic and require significant foundation repair or modifications.

Figure 11. Continuous two-segment ice column during compression testing in the MTS machine at –20°C (-4°F). A joint between the two segments is visible.

We applied increasing loads in 20- to 30-minute increments, then added pressure until brittle failure (Table 1). Note that the 1- and 3-psi tests produced approximately zero displacement. The same loads applied over longer time intervals (i.e., days) would be expected to produce relatively low creep rates of less than 1 m (3.5 ft)/year. Preliminary data suggest that the long-term design pressure of an ice column be limited to less than 20.7 kPa (3 psi). These creep rates reflect an expedient compression test where loads were continuously increasing. They are a visual (qualitative) representation of an ice column exposed to increasing vertical loads. Actual field rates (quantitative) will be different in magnitude, based on loading, ice column size, ice and snow temperature, snow foundation characteristics, etc. Displacement over time and the relationship between force and displacement are presented in Appendix C.

The ice column withstood significantly greater loads than would be applied in the field; it did not shatter immediately. However, this compression test only takes vertical strength into account and does not characterize the ice column's presumably low resistance to lateral forces.

Table 1. Increasing loads were applied over 20- to 30-minute intervals until brittle failure.

Load (lbf)	Pressure (psi)	Displacement (in.)	Time (min.)	Creep rate (ft/year)
38	1	time-limited	20	—
114	3	time-limited	30	—
266	7	0.0024	30	3.504
381	10	0.0062	30	9.052
571	15	0.0064	30	9.344
761	20	0.0067	30	9.782
951	25	0.0074	30	10.804
1142	30	0.0083	30	12.118
1522	40	0.0094	30	13.724
1903	50	0.0114	30	16.644
2854	75	0.0137	30	20.002
~3000–23,000	~79–604	Failure	10	—

7 Conclusions

We conducted laboratory tests of a heated slip form footer design concept. It is intended to form an ice column to support elevated structures in polar regions. At snow temperature conditions representing those at Summit Station, Greenland (–20°C [–4°F]), we explored its ability to 1) form an ice column and 2) to be heated and lifted up through snow. Additionally, we 3) accessed the heater through the maintenance panel and 4) conducted expedient compression tests on the resultant column.

These tests revealed several technical challenges with the design concept, but we were able to work around them to grow a continuous, two-segment ice column, heat and lift the footer up through approximately 23 cm (9 in.) of compacted snow, and remove and replace the maintenance panel. Based on the significant compression strength achieved with this technique, we recommend further evaluation of the combination of in-situ resources (i.e., snow, ice, and water) for use as construction materials in polar regions. Accommodating both high compressive and high tensile forces will be particularly challenging for these materials. Initial guidance suggests maintaining snow and ice at or below –20°C (–4°F) at all times; higher temperatures cause rapid increases in settlement and compression rates. At full-scale the following issues would be magnified and should be considered as this concept moves forward through design and prototype phases:

- Water leaked out the bottom of the footer into the compacted snow base. We were able to keep water inside by using an ice base.
- Water leaked out the base of the footer when forming a frozen seal before filling. We placed low volumes of water in three consecutive rounds to successfully form a seal prior to filling the footer. This phenomenon also occurred when constructing a two-segment ice column.
- The top plate and access tube are not heated, causing unintended detrimental freezing. Part of the ice column inside the footer froze to the top plate and broke the column in half during subsequent lifting.
- Fractures formed in the ice (both in the base and in the column itself) each time we added water or turned on the heater.

8 Recommendations and Additional Considerations

- An impermeable base material is necessary to prevent losing water or slurry out the bottom of the footer.
- The top plate and access tube of the footer should be heated. Heat in these areas would also benefit the lift process.
- Using a snow/water slurry may create voids that can reduce the strength of the ice column compared to that of fresh water ice (Coutermarsh and Phetteplace, 1985). Consider optimizing the snow-water ratio of the slurry for maximum strength.
- Partial filling of the footer is not a viable field option when the footer is resting on the ice column for support.
- The aluminum prototype has a much higher thermal conduction rate than the proposed full-scale steel footer. Consider bi-metal construction for a full-scale design.
- We recommend design improvements to facilitate maintenance panel removal and replacement. For example, bolts would be much easier to work with than screws in extreme cold while wearing gloves, and multiple panel segments would be easier to remove or replace than one continuous panel.
- Future studies should consider the consequences of the footer breaking through upper layers of snow during lifting.
- The effects of the gaps formed between the column and the surrounding snow after melt out require investigation. Back fill of these spaces would be a maintenance challenge.
- There is a need to understand how the ice column will behave within the snowpack. We expect the column may be “dragged” downward by surrounding snow and thus potentially increase its settlement rate compared to “natural” snow settlement.
- Attention should also be focused on the effects of lateral forces on the ice column. Lateral, especially differential, ice sheet motion could compromise the integrity of ice columns.
- Future study should consider modular compacted snow or ice blocks as foundation materials. This concept may be more viable and remove the dependence on ice columns to resist lateral and torsional stresses.
- Should this concept move forward, we recommend conducting a full suite of laboratory compression tests.

- Energy requirements should be assessed for melting the slip form footer away from the ice column and through the snowpack.
- Based on the significant vertical strength achieved with this technique, we recommend in-situ resources (i.e., snow, ice, and water) be evaluated as construction materials for use at polar facilities.

References[1]

Cole, D. 2012. Personal communication

Coutermarsh, B., and G. Phetteplace. 1985. Snow in the construction of ice bridges. Cold Regions Research and Engineering Laboratory, Hanover, NH, CRREL Special Report 85-18.

Dibb, J., B. Hawley, and T. Dahl. 2012. Summit Station, Greenland: Past, Present, Future (oral presentation). *8th Annual Polar Technology Conference*. Fairlee, VT. http://polartechnologyconference.org/list_2012.html Accessed February 2013.

Hagemeister, W., and M. Kötteritzsch. 2010. Innovative hydraulic cylinder concept for cold regions. *Ingenieurgemeinshaft IgH*. Essen, Germany.

Kumin Associates Inc., and CH2MHill Polar Services. 2010. Basis of Design for the Model 5 Station Concept Design. *National Science Foundation Project, Summit Station, Greenland (Contract 813286)*. Anchorage, Alaska. http://www.nsf.gov/about/contracting/rfqs/support_arc/greenland/summit/model_5_docs/summit_mod5_bod_final.pdf Accessed February 2013.

Sadler, P. 2010. Modular jack-up station concept for high snow accumulation polar locations (oral presentation). In *Elevated Building Lift System in Polar Environments Workshop, Rosslyn, VA, Presented 15 September 2010*.

Sodhi, D.S. 2013. Personal communication

Steffen, K., J. E. Box, and W. Abdalati. 1996. *Greenland Climate Network: GC-Net*. In Glaciers, Ice Sheets and Volcanoes, tribute to M. Meier (S. C. Colbeck, Ed.). Cold Regions Research and Engineering Laboratory, Hanover, NH, CRREL Special Report 96-27, pp. 98-103.

Weale, J., L. Barna, W. Tobiasson, and J. Mercer. In prep. Elevated building lift system. In *Polar Environments Workshop, February 2011*. ERDC/CRREL Special Report. Cold Regions Research and Engineering Laboratory, Hanover, NH.

[1] Photos, video footage, and raw data (from thermocouples and compression testing) are on file at CRREL and available from the authors by request.

Appendix A: Electrical Schematic

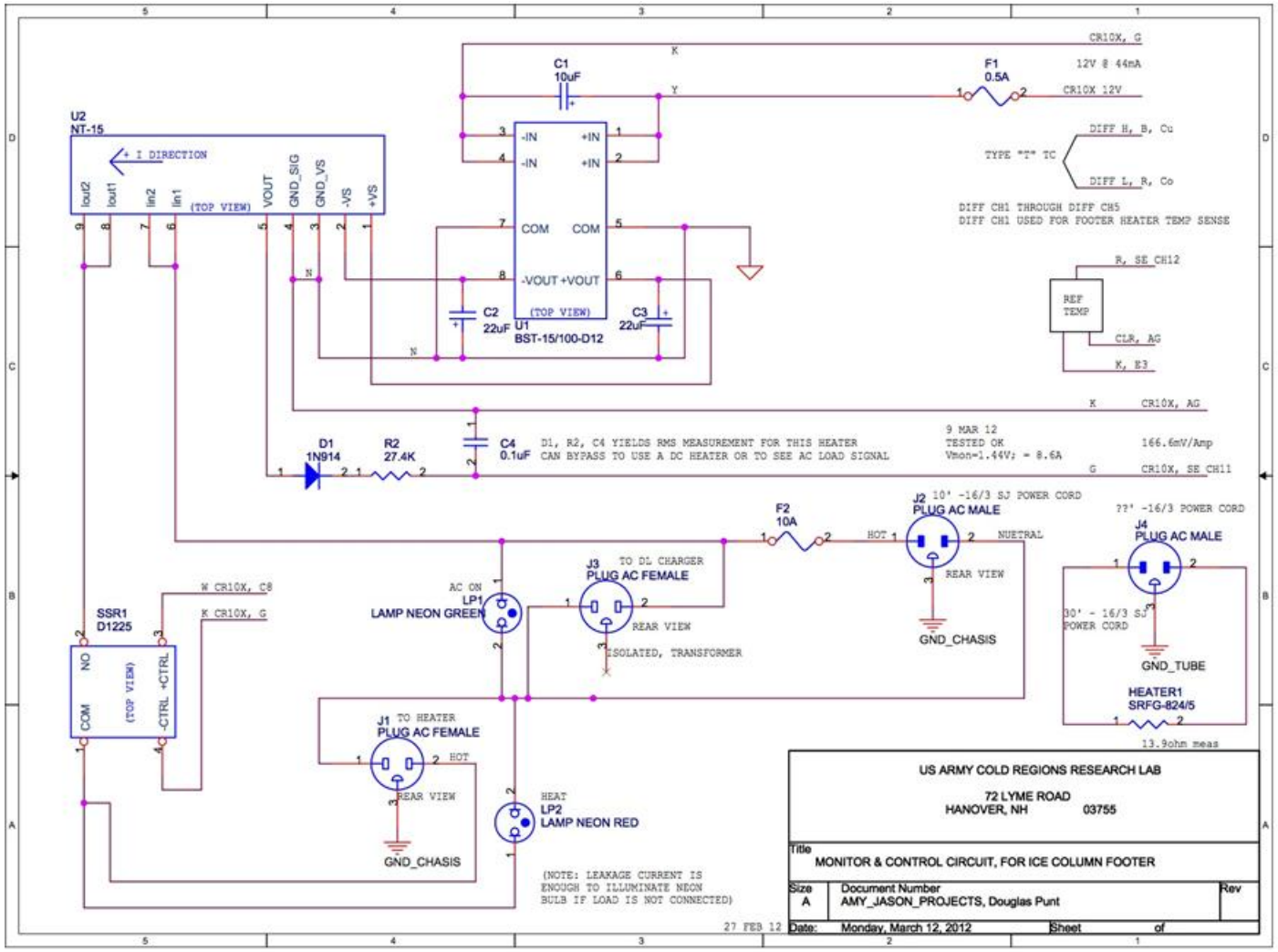

Appendix B: Temperature from Thermocouples

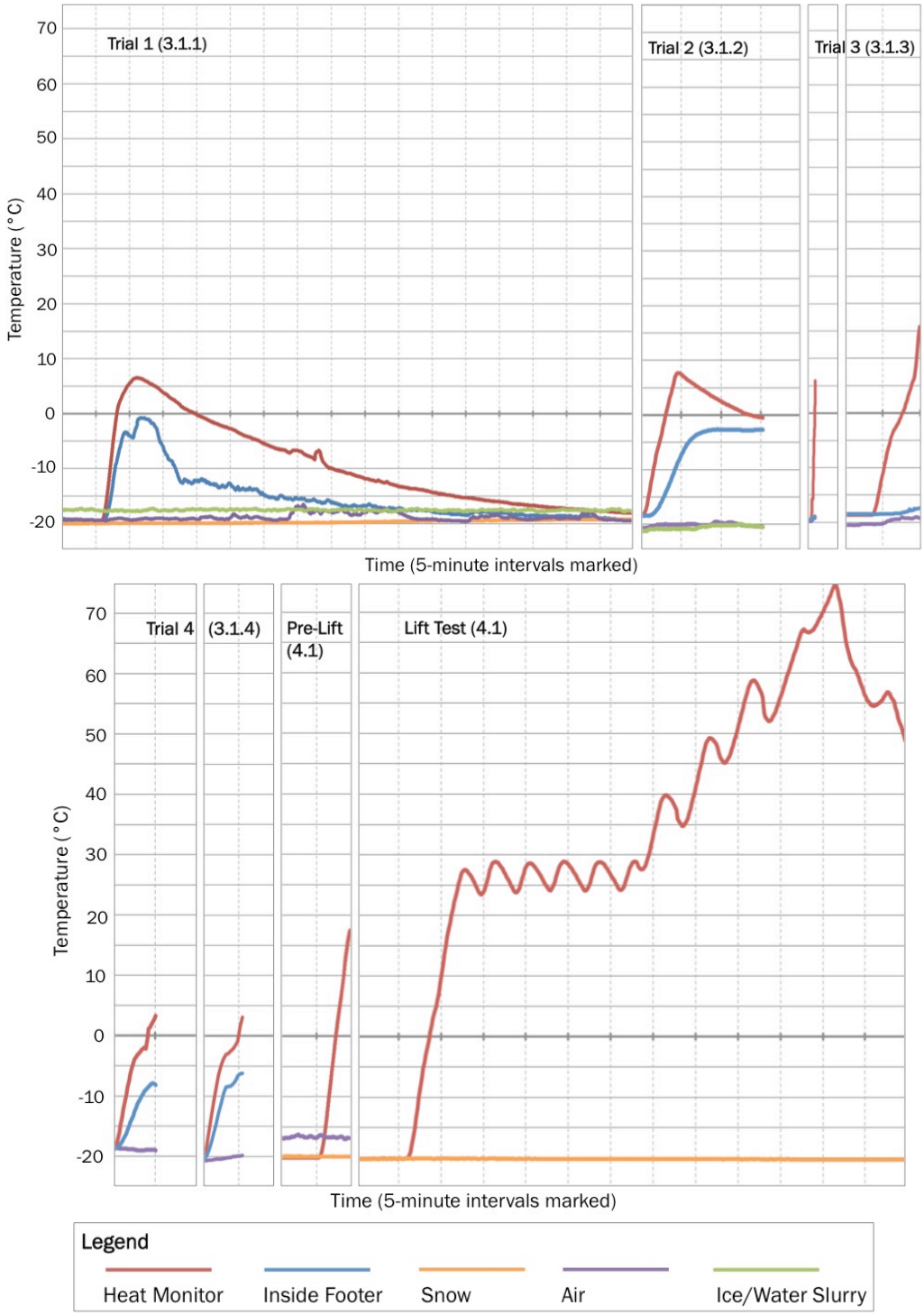

Appendix C: Compression Test

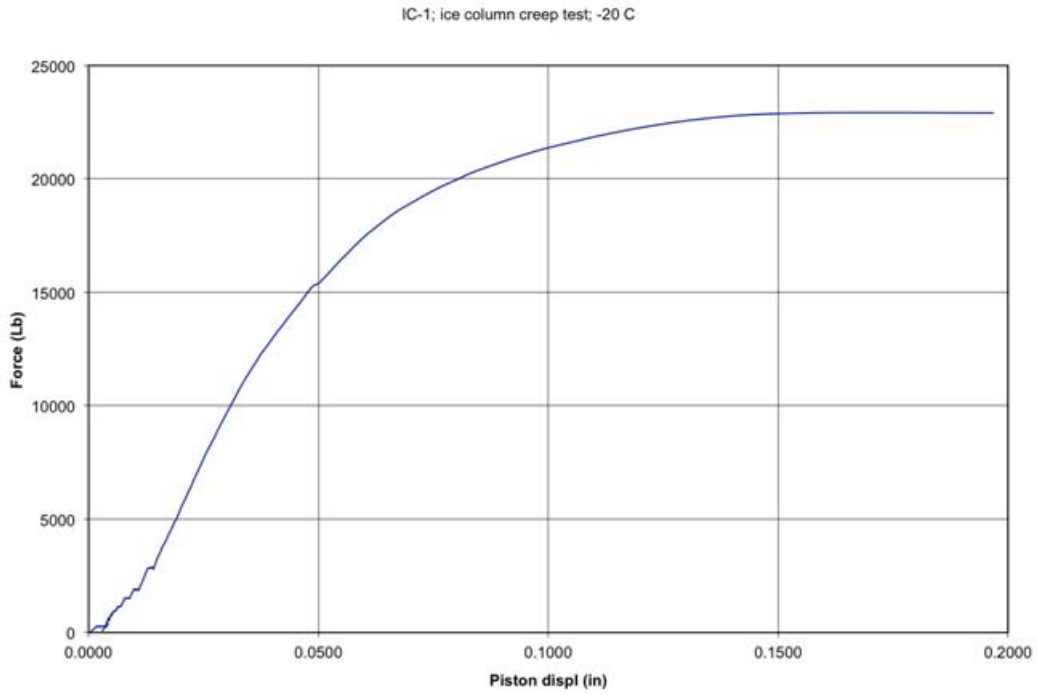

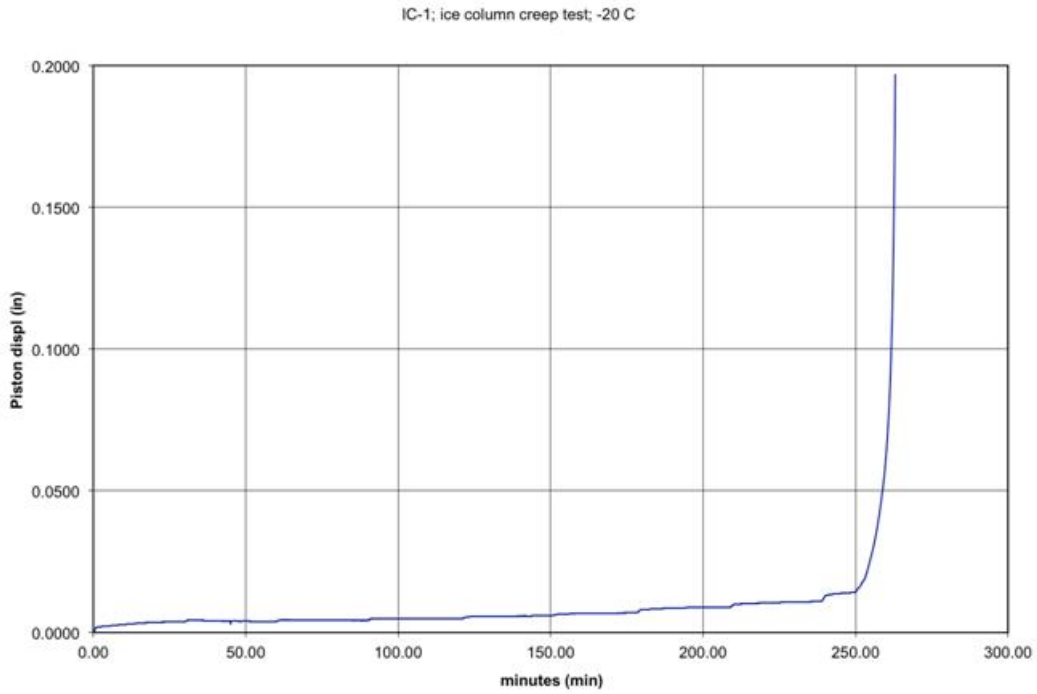

REPORT DOCUMENTATION PAGE

Form Approved
OMB No. 0704-0188

Public reporting burden for this collection of information is estimated to average 1 hour per response, including the time for reviewing instructions, searching existing data sources, gathering and maintaining the data needed, and completing and reviewing this collection of information. Send comments regarding this burden estimate or any other aspect of this collection of information, including suggestions for reducing this burden to Department of Defense, Washington Headquarters Services, Directorate for Information Operations and Reports (0704-0188), 1215 Jefferson Davis Highway, Suite 1204, Arlington, VA 22202-4302. Respondents should be aware that notwithstanding any other provision of law, no person shall be subject to any penalty for failing to comply with a collection of information if it does not display a currently valid OMB control number. **PLEASE DO NOT RETURN YOUR FORM TO THE ABOVE ADDRESS.**

1. REPORT DATE *(DD-MM-YYYY)*
June 2013

2. REPORT TYPE
Final

3. DATES COVERED *(From - To)*

4. TITLE AND SUBTITLE
Ice Column Design Concept for Summit Station: Laboratory Testing Results

5a. CONTRACT NUMBER

5b. GRANT NUMBER

5c. PROGRAM ELEMENT NUMBER

6. AUTHOR(S)
Amy M. Burzynski, Jason C. Weale, and Lynette Barna

5d. PROJECT NUMBER

5e. TASK NUMBER

5f. WORK UNIT NUMBER

7. PERFORMING ORGANIZATION NAME(S) AND ADDRESS(ES)
Cold Regions Research and Engineering Laboratory
U.S. Army Engineer Research and Development Center
72 Lyme Road
Hanover, NH 03755

8. PERFORMING ORGANIZATION REPORT NUMBER
ERDC/CRREL TR-13-9

9. SPONSORING / MONITORING AGENCY NAME(S) AND ADDRESS(ES)
National Science Foundation Office of Polar Programs Arctic Research Support and Logistics Program

10. SPONSOR/MONITOR'S ACRONYM(S)

11. SPONSOR/MONITOR'S REPORT NUMBER(S)

12. DISTRIBUTION / AVAILABILITY STATEMENT
Approved for public release; distribution is unlimited.

13. SUPPLEMENTARY NOTES

14. ABSTRACT

Elevated structures in polar regions must be lifted periodically to maintain clearance above the snow surface. At the 2010 Lift Systems Workshop sponsored by the National Science Foundation, Sadler (2010) presented a design concept for a building lift system that uses ice columns for support. We conducted laboratory tests of Sadler's heated slip form footer design concept at temperature conditions representing those at Summit Station, Greenland (–20°C [–4°F]). We explored its ability to 1) form an ice column and 2) be heated and lifted up through snow. Additionally, we 3) accessed the heater through the maintenance panel, and 4) conducted expedient compression tests on the resultant ice column. These tests revealed significant technical challenges. We were able to work around them to grow a continuous, two-segment ice column, heat and lift the slip form up through 23 cm (9 in.) of compacted snow, and successfully remove and replace the maintenance panel. Based on the significant compression strength achieved with this technique, we recommend evaluating the combination of in-situ resources (i.e., snow, ice, and water) for use as foundation construction materials in polar regions. Accommodating both high compressive and high tensile forces will be particularly challenging. Initial guidance suggests maintaining snow and ice at or below –20°C (–4°F) at all times; higher temperatures cause rapid increases in settlement and compression rates.

15. SUBJECT TERMS
Ice columns
Ice foundations
Polar foundations
Slip form footer (ice)
Snow foundations

16. SECURITY CLASSIFICATION OF:			**17. LIMITATION OF ABSTRACT**	**18. NUMBER OF PAGES**	**19a. NAME OF RESPONSIBLE PERSON**
a. REPORT	**b. ABSTRACT**	**c. THIS PAGE**			**19b. TELEPHONE NUMBER** *(include area code)*
U	U	U	None	33	

Standard Form 298 (Rev. 8-98)
Prescribed by ANSI Std. 239.18