NPS-AM-13-C10P01R04-033

EXCERPT FROM THE

PROCEEDINGS

OF THE

TENTH ANNUAL ACQUISITION RESEARCH SYMPOSIUM ACQUISITION MANAGEMENT

Bottleneck Analysis on the DoD Pre-Milestone B Acquisition Processes

Danielle Worger and Teresa Wu, Arizona State University
Eugene Rex Jalao, Arizona State University and University of the Philippines
Christopher Auger, Lars Baldus, Brian Yoshimoto, J. Robert Wirthlin, and John Colombi, The Air Force Institute of Technology

Published April 1, 2013

Approved for public release; distribution is unlimited.
Prepared for the Naval Postgraduate School, Monterey, CA 93943.

Disclaimer: The views represented in this report are those of the authors and do not reflect the official policy position of the Navy, the Department of Defense, or the federal government.

ACQUISITION RESEARCH PROGRAM
GRADUATE SCHOOL OF BUSINESS & PUBLIC POLICY
NAVAL POSTGRADUATE SCHOOL

Report Documentation Page

Form Approved
OMB No. 0704-0188

Public reporting burden for the collection of information is estimated to average 1 hour per response, including the time for reviewing instructions, searching existing data sources, gathering and maintaining the data needed, and completing and reviewing the collection of information. Send comments regarding this burden estimate or any other aspect of this collection of information, including suggestions for reducing this burden, to Washington Headquarters Services, Directorate for Information Operations and Reports, 1215 Jefferson Davis Highway, Suite 1204, Arlington VA 22202-4302. Respondents should be aware that notwithstanding any other provision of law, no person shall be subject to a penalty for failing to comply with a collection of information if it does not display a currently valid OMB control number.

1. REPORT DATE **01 APR 2013**	2. REPORT TYPE	3. DATES COVERED **00-00-2013 to 00-00-2013**
4. TITLE AND SUBTITLE **Bottleneck Analysis on the DoD Pre-Milestone B Acquisition Processes**		5a. CONTRACT NUMBER
		5b. GRANT NUMBER
		5c. PROGRAM ELEMENT NUMBER
6. AUTHOR(S)		5d. PROJECT NUMBER
		5e. TASK NUMBER
		5f. WORK UNIT NUMBER
7. PERFORMING ORGANIZATION NAME(S) AND ADDRESS(ES) **Arizona State University,1151 S. Forest Avenue,Tempe,AZ,85281**		8. PERFORMING ORGANIZATION REPORT NUMBER
9. SPONSORING/MONITORING AGENCY NAME(S) AND ADDRESS(ES)		10. SPONSOR/MONITOR'S ACRONYM(S)
		11. SPONSOR/MONITOR'S REPORT NUMBER(S)

12. DISTRIBUTION/AVAILABILITY STATEMENT
Approved for public release; distribution unlimited

13. SUPPLEMENTARY NOTES

14. ABSTRACT

The current Enterprise Requirements and Acquisition Model, a discrete event simulation of the major tasks and decisions within the DoD acquisition system, identifies several what-if intervention strategies to improve program completion time. However, processes that contribute to the program acquisition completion time were not explicitly identified. This research seeks to determine the acquisition processes that contribute significantly to the time a program reaches Milestone (MS) B and provide interventions to improve program completion time. In order to solve this problem, this research uses critical path analysis to determine the bottleneck activities in the Pre-MS B processes using additional simulation analysis. Results show that the systems engineering processes are the bottleneck activities in Pre-MS B acquisition stage. Furthermore, this research then examines the effect of these processes by varying the mean completion times and having them occur earlier in the acquisition process. Potential policies are formulated from the results to further reduce program acquisition completion time.

15. SUBJECT TERMS

16. SECURITY CLASSIFICATION OF:			17. LIMITATION OF ABSTRACT	18. NUMBER OF PAGES	19a. NAME OF RESPONSIBLE PERSON
a. REPORT **unclassified**	b. ABSTRACT **unclassified**	c. THIS PAGE **unclassified**	**Same as Report (SAR)**	**20**	

Standard Form 298 (Rev. 8-98)
Prescribed by ANSI Std Z39-18

The research presented in this report was supported by the Acquisition Research Program of the Graduate School of Business & Public Policy at the Naval Postgraduate School.

To request defense acquisition research, to become a research sponsor, or to print additional copies of reports, please contact any of the staff listed on the Acquisition Research Program website (www.acquisitionresearch.net).

ACQUISITION RESEARCH PROGRAM
GRADUATE SCHOOL OF BUSINESS & PUBLIC POLICY
NAVAL POSTGRADUATE SCHOOL

Preface & Acknowledgements

Welcome to our Tenth Annual Acquisition Research Symposium! We regret that this year it will be a “paper only” event. The double whammy of sequestration and a continuing resolution, with the attendant restrictions on travel and conferences, created too much uncertainty to properly stage the event. We will miss the dialogue with our acquisition colleagues and the opportunity for all our researchers to present their work. However, we intend to simulate the symposium as best we can, and these *Proceedings* present an opportunity for the papers to be published just as if they had been delivered. In any case, we will have a rich store of papers to draw from for next year’s event scheduled for May 14–15, 2014!

Despite these temporary setbacks, our Acquisition Research Program (ARP) here at the Naval Postgraduate School (NPS) continues at a normal pace. Since the ARP’s founding in 2003, over 1,200 original research reports have been added to the acquisition body of knowledge. We continue to add to that library, located online at www.acquisitionresearch.net, at a rate of roughly 140 reports per year. This activity has engaged researchers at over 70 universities and other institutions, greatly enhancing the diversity of thought brought to bear on the business activities of the DoD.

We generate this level of activity in three ways. First, we solicit research topics from academia and other institutions through an annual Broad Agency Announcement, sponsored by the USD(AT&L). Second, we issue an annual internal call for proposals to seek NPS faculty research supporting the interests of our program sponsors. Finally, we serve as a “broker” to market specific research topics identified by our sponsors to NPS graduate students. This three-pronged approach provides for a rich and broad diversity of scholarly rigor mixed with a good blend of practitioner experience in the field of acquisition. We are grateful to those of you who have contributed to our research program in the past and encourage your future participation.

Unfortunately, what will be missing this year is the active participation and networking that has been the hallmark of previous symposia. By purposely limiting attendance to 350 people, we encourage just that. This forum remains unique in its effort to bring scholars and practitioners together around acquisition research that is both relevant in application and rigorous in method. It provides the opportunity to interact with many top DoD acquisition officials and acquisition researchers. We encourage dialogue both in the formal panel sessions and in the many opportunities we make available at meals, breaks, and the day-ending socials. Many of our researchers use these occasions to establish new teaming arrangements for future research work. Despite the fact that we will not be gathered together to reap the above-listed benefits, the ARP will endeavor to stimulate this dialogue through various means throughout the year as we interact with our researchers and DoD officials.

Affordability remains a major focus in the DoD acquisition world and will no doubt get even more attention as the sequestration outcomes unfold. It is a central tenet of the DoD’s Better Buying Power initiatives, which continue to evolve as the DoD finds which of them work and which do not. This suggests that research with a focus on affordability will be of great interest to the DoD leadership in the year to come. Whether you’re a practitioner or scholar, we invite you to participate in that research.

We gratefully acknowledge the ongoing support and leadership of our sponsors, whose foresight and vision have assured the continuing success of the ARP:

- Office of the Under Secretary of Defense (Acquisition, Technology, & Logistics)
- Director, Acquisition Career Management, ASN (RD&A)
- Program Executive Officer, SHIPS
- Commander, Naval Sea Systems Command
- Program Executive Officer, Integrated Warfare Systems
- Army Contracting Command, U.S. Army Materiel Command
- Office of the Assistant Secretary of the Air Force (Acquisition)
- Office of the Assistant Secretary of the Army (Acquisition, Logistics, & Technology)
- Deputy Director, Acquisition Career Management, U.S. Army
- Office of Procurement and Assistance Management Headquarters, Department of Energy
- Director, Defense Security Cooperation Agency
- Deputy Assistant Secretary of the Navy, Research, Development, Test, & Evaluation
- Program Executive Officer, Tactical Aircraft
- Director, Office of Small Business Programs, Department of the Navy
- Director, Office of Acquisition Resources and Analysis (ARA)
- Deputy Assistant Secretary of the Navy, Acquisition & Procurement
- Director of Open Architecture, DASN (RDT&E)
- Program Executive Officer, Littoral Combat Ships

James B. Greene Jr.
Rear Admiral, U.S. Navy (Ret.)

Keith F. Snider, PhD
Associate Professor

Acquisition Management

Naval Ship Maintenance: An Analysis of the Dutch Shipbuilding Industry Using the Knowledge Value Added, Systems Dynamics, and Integrated Risk Management Methodologies

David N. Ford, Thomas J. Housel, and Johnathan C. Mun
Naval Postgraduate School

Time as an Independent Variable: A Tool to Drive Cost Out of and Efficiency Into Major Acquisition Programs

J. David Patterson
National Defense Business Institute, University of Tennessee

The Impact of Globalization on the U.S. Defense Industry

Jacques S. Gansler and William Lucyshyn
University of Maryland

Bottleneck Analysis on the DoD Pre-Milestone B Acquisition Processes

Danielle Worger and Teresa Wu, *Arizona State University*
Eugene Rex Jalao, *Arizona State University and University of the Philippines*
Christopher Auger, Lars Baldus, Brian Yoshimoto, J. Robert Wirthlin, and John Colombi, *The Air Force Institute of Technology*

Software Acquisition Patterns of Failure and How to Recognize Them

Lisa Brownsword, Cecilia Albert, Patrick Place, and David Carney
Carnegie Mellon University

Fewer Mistakes on the First Day: Architectural Strategies and Their Impacts on Acquisition Outcomes

Linda McCabe and Anthony Wicht
Massachusetts Institute of Technology

The Joint Program Dilemma: Analyzing the Pervasive Role That Social Dilemmas Play in Undermining Acquisition Success

Andrew P. Moore, William E. Novak, Julie B. Cohen, Jay D. Marchetti, and Matthew L. Collins
Software Engineering Institute, Carnegie Mellon University

Acquisition Risks in a World of Joint Capabilities: A Study of Interdependency Complexity

Mary Maureen Brown
University of North Carolina Charlotte

Leveraging Structural Characteristics of Interdependent Networks to Model Non-Linear Cascading Risks

Anita Raja, Mohammad Rashedul Hasan, and Shalini Rajanna
University of North Carolina at Charlotte
Ansaf Salleb-Aoussi, *Columbia University, Center for Computational Learning Systems*

Lexical Link Analysis Application: Improving Web Service to Acquisition Visibility Portal

Ying Zhao, Shelley Gallup, and Douglas MacKinnon
Naval Postgraduate School

Capturing Creative Program Management Best Practices

Brandon Keller and J. Robert Wirthlin
Air Force Institute of Technology

The RITE Approach to Agile Acquisition

Timothy Boyce, Iva Sherman, and Nicholas Roussel
Space and Naval Warfare Systems Center Pacific

Challenge-Based Acquisition: Stimulating Innovative Solutions Faster and Cheaper by Asking the Right Questions

Richard Weatherly, Virginia Wydler, Matthew D. Way, Scott Anderson, and Michael Arendt
MITRE Corporation

Defense Acquisition and the Case of the Joint Capabilities Technology Demonstration Office: Ad Hoc Problem Solving as a Mechanism for Adaptive Change

Kathryn Aten and John T. Dillard
Naval Postgraduate School

A Comparative Assessment of the Navy's Future Naval Capabilities (FNC) Process and Joint Staff Capability Gap Assessment Process as Related to Pacific Command's (PACOM) Integrated Priority List Submission

Jaime Frittman, Sibel McGee, and John Yuhas, *Analytic Services, Inc.*
Ansaf Salleb-Aoussi, *Columbia University*

Enabling Design for Affordability: An Epoch-Era Analysis Approach

Michael A. Schaffner, Marcus Wu Shihong, Adam M. Ross, and Donna H. Rhodes
Massachusetts Institute of Technology

Measuring Dynamic Knowledge and Performance at the Tactical Edges of Organizations: Assessing Acquisition Workforce Quality

Mark E. Nissen
Naval Postgraduate School

Outcome-Focused Market Intelligence: Extracting Better Value and Effectiveness From Strategic Sourcing

Timothy G. Hawkins, *Naval Postgraduate School*
Michael E. Knipper, *771 Enterprise Sourcing Squadron USAF*
Timothy S. Reed, *Beyond Optimal Strategic Solutions*

Bottleneck Analysis on the DoD Pre-Milestone B Acquisition Processes

Danielle Worger—Worger is a student in Barrett, the Honors College at Arizona State University. She is concurrently pursing her BS and MS degrees in industrial engineering at the School of Computing, Informatics, and Decision Systems Engineering of Arizona State University.

Eugene Rex Jalao—Jalao is a PhD candidate of industrial engineering at Arizona State University. He is also an assistant professor on study leave from the University of the Philippines, Industrial Engineering and Operations Research Department, where he obtained both his BS and MS degrees in industrial engineering. His research interests are multi-criteria decision making, business intelligence and analytics, and supply chain management.

Christopher Auger, Lars Baldus, and **Brian Yoshimoto—**Auger, Baldus, and Yoshimoto are students at the Air Force Institute of Technology. Majors Auger and Yoshimoto are Air Force officers, and Lieutenant Colonel Baldus is from the German Air Force. All are pursuing MS degrees in air and space systems engineering.

J. Robert Wirthlin—Wirthlin, PhD, LtCol, USAF, is an assistant professor of engineering systems at the Air Force Institute of Technology. He holds a PhD and MS from the Massachusetts Institute of Technology and a BS from the United States Air Force Academy. He is a member of the faculty of both the AFIT Graduate Engineering Management and Systems Engineering Programs. His research interests include new product development of complex systems, risk, and application of lean to product development.

John Colombi—Colombi is an assistant professor of systems engineering at the Air Force Institute of Technology (AFIT). He received his PhD in electrical engineering from AFIT. Dr. Colombi served 21 years in the U.S. Air Force with experiences in C4ISR systems integration and engineering activities, program management, and information systems security and communication networking research. Currently, he leads research in human systems integration, enterprise and system architecture evaluation, complex adaptive systems, and acquisition policy analysis.

Teresa Wu—Wu is an associate professor of industrial engineering at the School of Computing, Informatics, and Decision Systems Engineering of Arizona State University. She is the NSF CAREER award winner (2003) and the ASU tenure and promotion exemplar winner (2006). She received her PhD from the University of Iowa. Her main areas of interests are in distributed decision support, systems simulation, distributed information systems, and supply chain management.

Abstract

The current Enterprise Requirements and Acquisition Model, a discrete event simulation of the major tasks and decisions within the DoD acquisition system, identifies several what-if intervention strategies to improve program completion time. However, processes that contribute to the program acquisition completion time were not explicitly identified. This research seeks to determine the acquisition processes that contribute significantly to the time a program reaches Milestone (MS) B and provide interventions to improve program completion time. In order to solve this problem, this research uses critical path analysis to determine the bottleneck activities in the Pre-MS B processes using additional simulation analysis. Results show that the systems engineering processes are the bottleneck activities in Pre-MS B acquisition stage. Furthermore, this research then examines the effect of these processes by varying the mean completion times and having them occur earlier in the acquisition process. Potential policies are formulated from the results to further reduce program acquisition completion time.

Introduction

A large number of Department of Defense (DoD) projects are being completed behind schedule and over-budget (Schwartz, 2010). To support this claim, a Government Accountability Office (GAO) report released in 2009 stated that for the DoD's 2008 portfolio, on average a program faced a 22-month delay and exceeded the original budget (Sullivan et al., 2009). Generally, total cost growth of 44% has been consistent over the past few decades with a recent assessment by RAND (Arena et al., 2006). Hence, potential intervention strategies and policies to improve the acquisition processes would be worthwhile. On the other hand, since the end-to-end DoD acquisition process is a large, complex, socio-technological system, it is difficult to analyze and determine which processes or factors affect performance metrics like time, cost, and resource utilization. The current DoD acquisition system, which is composed of three separate and distinct processes—the Joint Capabilities Integration Development System (JCIDS), the Planning, Programming, Budgeting & Execution (PPBE) process, and the formal acquisition development system outlined by the DoD 5000 series of instructions—does not exist in a static environment. The system is constantly being adjusted, either through policy changes or statute (CJCS, 2012; Weapon System Acquisition Reform Act of 2009; OUSD[AT&L], 2008). Hence, other viable analysis methodologies must be utilized to fully comprehend this complex system.

In 2009, a discrete event simulation (DES) model called the Enterprise Requirements and Acquisition Model (ERAM) was created by Wirthlin (2009). This model was created to simulate the actual acquisition processes of the DoD, using the Air Force implementation of acquisition processes as the basis of the model, in order to provide further insight and understanding of the complex system's behavior. Furthermore, ERAM has benefited from additional research since the original 2009 Wirthlin version (Leach & Searle, 2011; Montgomery, 2012). These new versions have added additional functionality and options for model users to manipulate (Wirthlin, Houston, & Madachy, 2011). According to the ERAM model, during the acquisition process, approximately 80% of the time, a program was undergoing parallel processes when it is in the acquisition system. It was also observed that one of the main portions of the model during which these parallel processes take place are within the Pre-Milestone B (Pre-MS B) stage. However, Wirthlin's research did not identify the significant processes that affect the total program time for a project to reach MS B.

Against this background, this research addressed these limitations and issues by additional simulation and statistical analysis on the ERAM Arena version of the model. The end goal of this research was to determine the bottleneck of the Pre-MS B processes, investigate interventions to alleviate the bottleneck, and translate them into implementable policy changes. The rest of this paper is organized as follows. The Review of Literature section provides an overview of the current literature on bottleneck analysis and the ERAM model. The Simulation Analysis Methodology section presents the simulation analysis methodology performed, while the Results and Discussions section shows the results of the analysis. Finally, the Conclusions section presents the conclusions of this research as well as viable intervention policies for reducing the time a program takes to reach MS B.

Review of Literature

The ERAM Model

The ERAM simulation model extends from the generation of capability requirements in the JCIDS process to MS C, the review before the production stage begins. Additionally, the ERAM is abstracted at a very high level (Wirthlin, 2009). This high level of abstraction allows overall system performance to be more easily studied. For each replication, ERAM produces schedule time for programs that reach MS C. Although cost is not measured, it

was found that cost overruns were closely related to schedule overruns (Wirthlin, 2009). The validation and verification of ERAM included hand modeling, iterations of correction from feedback of experts in all three systems that comprise the entire acquisition system, and comparison of schedule and budget information from the DAMIR and SMART databases to distributions of the schedule time of model-generated data (Wirthlin, 2009).

The original version of ERAM was created in Arena Simulation software; however, it was translated into an ExtendSim version (ERAM 1.0) to serve as a schedule and success estimation tool of space programs for the Concept Design Center of Aerospace Corporation (Leach & Searle, 2011). Leach and Searle further modified the model introducing ERAM 1.1 to 2.1 by correcting discrepancies between the Arena and ExtendSim models, adding user-controlled variables, incorporating space-acquisition specific elements, and updating the model to include policy in the newly released DoDI 5000.02 document. Montgomery (2012) continued developing the model in order to add the rapid acquisition process and include ACAT II/III programs. A summary of the versions of the ERAM is presented in Table 1.

Table 1. ERAM Versions Adapted From Houston (2012)

Author	Version Number	Changes
Wirthlin (2009)	ERAM 1.0	Baseline Translation from Arena to ExtendSim
Leach and Searle (2011)	ERAM 1.1	Updates by the Aerospace Design Team and Served as new baseline model
	ERAM 1.2	Implemented new DoD 5000.02 policies
	ERAM 2.0	Incorporated the global variables that modify acquisition capabilities
	ERAM 2.1	Incorporated the JCIDS review process
Montgomery (2012)	ERAM 2.2	Added more capabilities for ACAT 2/3 and Rapid Acquisition Process

Since the ExtendSim version of ERAM was designed with the purpose of allowing Aerospace Corporation to create estimates of the schedule and success of a particular project, it has a distinctly different scope and utility from the Arena model of ERAM. The Arena model allows the user to view the behavior of the overall portfolio while the ExtendSim version allows the user to investigate a specific program. For example, while the ExtendSim requires the user to select a specific ACAT level for the program being tested, the Arena version assigns ACAT levels based on the distribution of programs observed in the actual acquisition system. While the ExtendSim version of ERAM was designed with the intention of allowing the user to perform what-if scenarios, as far as the researcher is concerned, no literature of the evaluation of possible intervention strategies using the ExtendSim version of ERAM has been published. In his dissertation, Wirthlin investigated the effect of 20 interventions on the effect of end-to-end acquisition time in the Arena version. When all 20 interventions were implemented, a 20% reduction in end-to-end acquisition time was achieved. However, more interventions can be developed to further study and improve the DoD end-to-end acquisition process.

Critical Path Analysis

To the best of our knowledge, no literature has attempted to identify the critical path of the acquisition process (Monaco & White, 2005). Although long cycle times continue to

plague DoD acquisition programs, relatively few studies have focused on identifying significant processes that dictate program cycle time. Despite the Packard Commission's assertion that schedule drives costs, most studies and policy changes have focused on cost reduction rather than reducing cycle time (Al-Harbi, 2001; McNutt, 1999). Drezner and Smith (1990) performed a statistical analysis of 10 programs in order to hypothesize factors that affect the original plan and program deviation. A study performed by Tyson, Nelson, Om, and Palmer (1989) examined schedule variance and its causes. The study found that prototyping, sole-source procurement, fixed-priced contracts, and multiyear procurement reduced schedule variance. The study also found that programs awarded through full and open competition experience more schedule growth than those programs that did not. Another possible schedule driver is presented by Brown, Flowe, and Hamel (2007). Brown et al. compared the schedule quality of joint and single-system programs. From this study it was found that joint system programs have significantly more schedule breaches; however, the research did not identify the root cause of this difference (Brown et al., 2007).

In summary, to the best of our knowledge, there exists no research that has been conducted that isolates and identifies bottleneck activities and its effect on the program completion time throughout the DoD acquisition process. Hence, intervention strategies to be developed must be focused on addressing bottleneck issues to obtain maximum improvement of the end-to-end DoD acquisition process.

Simulation Analysis Methodology

This section describes the analysis performed to identify bottleneck operations within the Pre-MS B stage. After identifying bottleneck operations, intervention strategies were also formulated in this section to reduce total program completion time. Hence, this research was performed in two phases. A brief description of these phases is presented as follows:

- The first phase performed a critical path analysis on the Pre-MS B activities to identify a bottleneck (see the Identification of Bottleneck Activities subsection).
- The second phase focused on investigating the effect of reducing the process times of the identified bottleneck activities from Phase 1 and determining the effect of allowing them to be executed earlier in the process (see the Design of Pre-MS B Bottleneck Interventions subsection).

Identification of Bottleneck Activities

In order to perform critical path analysis, the Pre-MS B section was mapped by hand to assist in visualization of the complex network of separation and batches in the acquisition system. The processes between each Separate and Batch method were left out for simplicity and ease of interpretation. The section or line segment between any two nodes was labeled. Figure 1 shows the mapped version of the Pre-MS B activities and Table 2 shows the activities associated with each section.

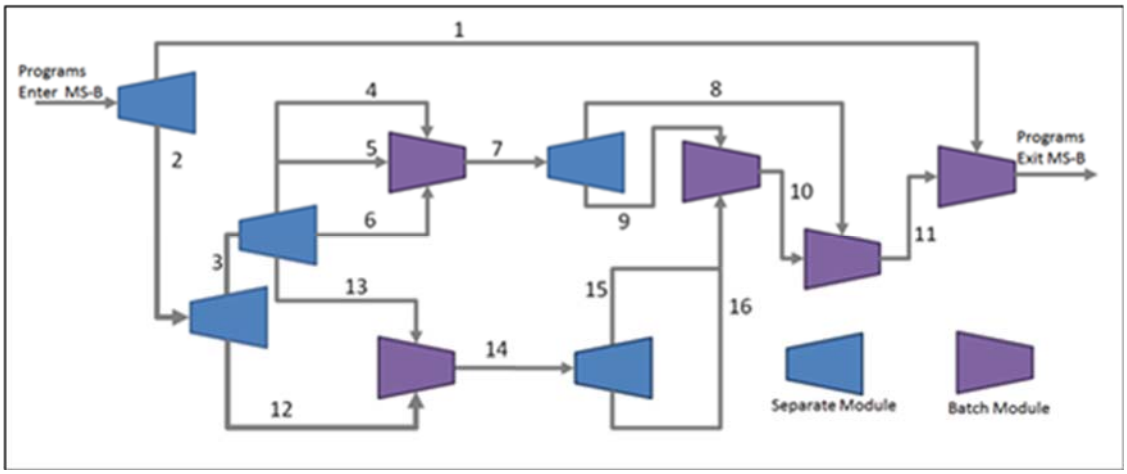

Figure 1. Pre-MS B Flowchart

Table 2. List of Activities in the Pre-MS B Flowchart

Section	Description of Activities
1	Requirements generation: KPP Development, high performance team work, etc.
2	RFP release, contract awarding
3	Waiting period for start of contract
4-6	Cost estimates (contractor, program office, and independent)
7	Affordability assessment
8	Set acquisition program baseline
9-10	No processes
11	Prepare and conduct acquisition panels
12	Early Systems Engineering (SE) activities: EOA, developmental testing, SRR, etc.
13	Acquisition planning activities
14	Draft RFP
15	RFP coordination
16	Source selection plans

Several Assign and Record modules were added to the Arena model in order to determine the time to complete each segment. Next, a trial of 3,000 runs was performed in Arena, and the times for each segment were collected. A spreadsheet was then used to analyze results and to determine the time of every possible path from the beginning of the Pre-MS B activities to the MS B decision. The path that took the longest amount of time was deemed as the critical path. By comparing segments in the longest paths to the sections found in shorter paths, the bottleneck activities for the Pre-MS B processes were identified.

Design of Pre-MS B Bottleneck Interventions

In order to improve the performance and alleviate the delay caused by this bottleneck, two intervention strategies were developed and tested in ERAM. The first intervention performed was to test the effect of decreasing the process time for all bottleneck activities. In order to test the effect of reducing total process time, the minimum, maximum, and mode for these activities was reduced by a fixed percentage. A paired t-test was then performed to compare each trial to the baseline at 95% confidence level. The reduction by using a fixed percentage was performed until a statistically significant change was obtained. Furthermore, the second intervention was a sensitivity analysis to determine the effect of allowing the bottleneck to be performed earlier in the Pre-MS B process to determine its effect on the total process time. The results of these interventions are illustrated in the next section.

Results and Discussions

This section presents the results of both simulation analysis phases performed on the ERAM Arena model. Specifically, the Pre-MS B Critical Path Analysis Results subsection presents the results of the identification of the critical path and bottleneck activities. Additionally, the Additional Pre-MS B Bottleneck Interventions subsection shows the results of the interventions performed on the bottleneck analysis to improve program completion time.

Pre-MS B Critical Path Analysis Results

During the critical path analysis, times for all 11 paths through the system were calculated. The paths were labeled by letters. Each path was composed of segments. A subset of the paths and their corresponding activities is shown in Table 3.

Table 3. List of Paths and Segments for Pre-MS B

Path Name	Corresponding Segments From Figure 1
A	1
B	2, 12, 14, 16, 10, 11
C	2, 12, 14, 15, 10, 11
D	2, 3, 6, 7, 8, 11
E	2, 3, 5, 7, 8, 11
F	2, 3, 4, 7, 8, 11
G	2, 3, 6, 7, 9, 10, 11
H	2, 3, 5, 7, 9, 10, 11
I	2, 3, 4, 7, 9, 10, 11
J	2, 3, 13, 14, 15, 10, 11
K	2, 3, 13, 14, 16, 10, 11

As seen from the Table 3, paths B and C heavily overlap while path A has no overlap with any other path. From the total time for each path, the longest was deemed the critical path. The second longest and third longest paths were also determined. A subset of this data can be seen in Table 4.

Table 4. Length of Longest Paths to MS B

Run	Percentage of Runs as Longest Path	Percentage of Runs as Second Longest Path	Percentage of Runs as Third Longest Path	Percentage of Runs in the Top Three Longest Path
A	45	8.75	42.5	96.25
B	43.75	38.75	7.5	90.00
C	6.25	38.75	31.25	76.25
D	3.75	8.75	8.75	21.25
F	0	2.5	5	7.5
J	0	1.25	1.25	2.50
K	1.25	1.25	3.75	6.25
E, G, H, I	0	0	0	0

As can be observed in Table 4, the critical path was most often A, B, and C. In approximately 95% of the trials, either A, B, or C composed the critical path. Specifically, 50% of the time path B or C was the critical path, and 45% of the time path A was the critical path. We note that path B and C have significant overlap; therefore, they are considered as a single path, path B/C. Since the critical path was very evenly split between path A and path B/C, it can be deduced that a Pre-MS B process common to both of paths would be the bottleneck of the process.

In examining the ERAM, it can be gleaned that there was some interaction between path A and path B/C. One of the last modules of path A was a hold module called “Wait for EOA completion.” A screenshot of this module can be seen in Figure 2.

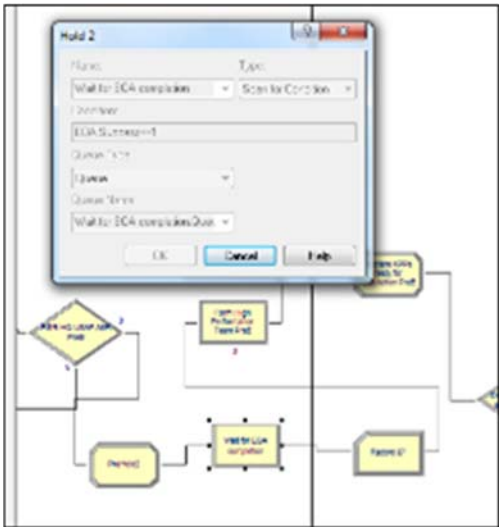

Figure 2. Wait for EOA Completion Screenshot

As seen in Figure 2, path A must wait for the EOA to be complete before the path can finish. A second communication occurs between the two paths. In order for the SE activities, like the EOA, to occur, the Key Performance Parameters (KPPs) must be

complete. The hold model called “Wait for T&E start” facilitates this communication and can be seen in Figure 3.

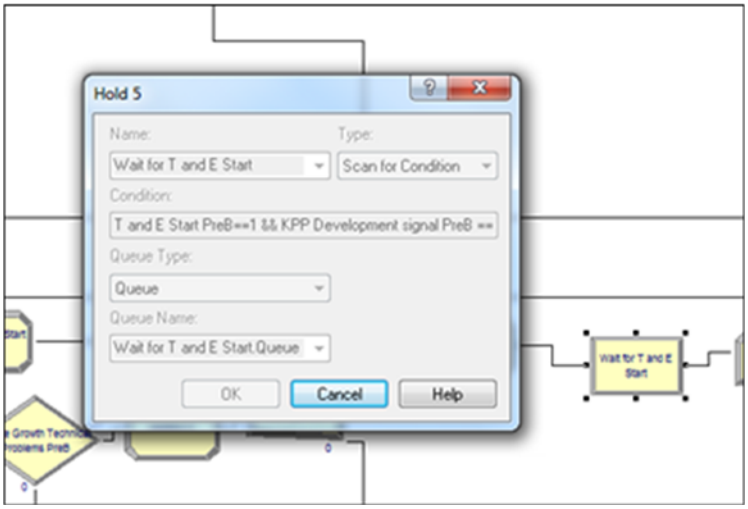

Figure 3. Wait for T&E start Screenshot

However, we note that this hold module also waits for the 75% of the contract length to elapse. At the default settings, the KPPs will always be completed in less than 75% of the contract length. Therefore, at the default settings, this hold does not serve as communication between the paths.

Since the completion of the EOA was the only communication between the two critical paths, the SE activities that begin before the EOA completion was determined to be the bottleneck of the Pre-MS B activities. If this bottleneck activity were removed, the time to MS B would be reduced by an average of 6.8%.

Additional Pre-MS B Bottleneck Interventions

Table 5 summarizes the results of the t-tests performed for when the process time for MS B system engineering activities was reduced. The tables show a subset of trials corresponding to a reduction in process times by 0%, 20%, 35%, or 50%. These settings were selected to show the sensitivity of the model to various degrees of process time reduction. From these simulation analyses, the mean ($\mu_{i^{th}\%}$) and standard deviation of the total completion time for each trial were calculated. These calculated means were compared to the mean of the baseline setting (μ_{base}) in the default settings, or 0% process time reduction. The null hypothesis for the t-tests is $H_0: \mu_{base} = \mu_{i^{th}\%}$ which corresponds to a failure to reject the claim that the baseline and the ith percentage are similar and alternative hypothesis $H_1: \mu_{base} \neq \mu_{i^{th}\%}$ if there is significant difference.

Table 5. Summary of t-Test Results of Process Time Reduction for SE Activities

	% Reduction of Process Time			
	0% (Baseline)	20%	35%	50%
Average Time to MS B (Days)	3418.01	3274.90	3211.564	3164.25
Standard Deviation (Days)	1701.08	1636.108	1557.816	1515.48
P-Value		0.281	0.109	0.046
Conclusion		Fail to Reject H_0	Fail to Reject H_0	Reject H_0

As seen in Table 5, it is evident that when the process time for SE activities was decreased by less than 50%, there will not be a statistically significant decrease in the time to MS B. However, when the process times for SE activities are reduced by more than approximately 50%, the model exhibits a statistically significant decrease in time to MS B.

Based on the identified bottleneck, which was the SE activities, a second intervention was developed. Specifically a sensitivity analysis was done to test the effect of allowing the bottleneck activities to occur earlier in the contract. This was implemented by adjusting the module called "Begin Testing PreB," which can be seen in Figure 4.

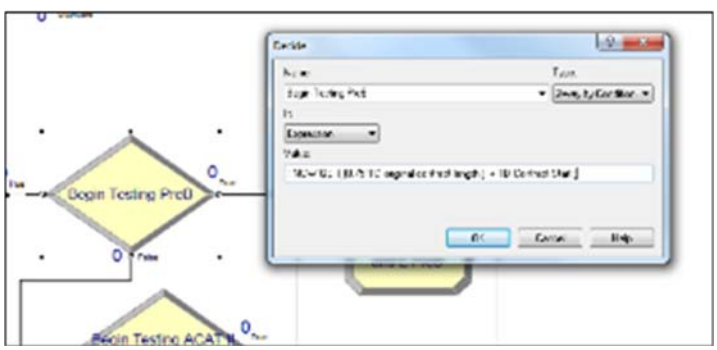

Figure 4. Begin Testing PreB Screenshot

The "Begin Testing PreB" module is a Decide module that, when set to true, triggers the beginning of the SE activities. The original criteria for the decide module, as verified and validated by Wirthlin when creating the ERAM model, was that 75% of the contract length must pass before these activities can occur. During this research, this percent was decreased to simulate the SE activities occurring sooner and more resources being applied at the beginning of the contract.

In addition, to allow SE tasks to begin sooner, the KPPs must be completed sooner in the process as their completion is also needed to trigger the start of the SE tasks. A more complete discussion of this interaction can be found in the Pre-MS B Critical Path Analysis Results subsection. The process time of the KPP development was reduced in order for the KPPs to be completed in a manner that does not delay the SE activities. A paired t-test was then performed to compare each trial to the baseline at 95% confidence level.

Tables 6 and Table 7 summarize the results of the t-tests performed for allowing Pre-MS B contractor activities to occur earlier in the contract. Specifically, Table 6 shows the effect of allowing the SE activities to occur earlier in the contract when the KPPs generation process time was not decreased, and Table 7 shows the effect of allowing the SE activities to occur earlier in the contract in conjunction with the KPPs generation process performing faster. Table 6 shows a subset of trials corresponding to the SE activity starting when 75%, 50%, 33%, or 25% of the contract has elapsed. Table 7 shows a subset of trials corresponding to the SE activity starting when 75%, 65%, 60%, or 55% of the contract has elapsed.

These settings were selected to show the sensitivity of the model to various start times of SE activities. From these simulations, the mean ($\mu_{i^{th}\%}$) and standard deviation of the total MS B completion time for each trial were calculated. These calculated means were compared to the mean of the baseline setting (μ_{base}) in the default settings, or starting after 75% of the contract has elapsed. The null hypothesis for the t-tests is $H_0: \mu_{base} = \mu_{i^{th}\%}$ which corresponds to a failure to reject the claim that the baseline and the ith percentage of contract elapsing before start is similar in terms of program completion time and alternative hypothesis $H_1: \mu_{base} \neq \mu_{i^{th}\%}$ if there is significant difference.

Table 6. Summary of t-Test Results of SE Activity Start Time Adjustments With Original KPP's Process Time

	% of Contract Elapsed Before Start			
	75% (Baseline)	50%	33%	25%
Average Time to MS B (Days)	3418.01	3379.09	3379.09	3379.09
Standard Deviation (Days)	1701.08	1670.31	1670.31	1670.31
P-Value		0.770	0.770	0.770
Conclusion		Fail to Reject H_0	Fail to Reject H_0	Fail to Reject H_0

Table 7. Summary of t-Test Results of SE Activity Start Time Adjustments With Reduced KPP's Process Time

	% of Contract Elapsed Before Start			
	75% (Baseline)	65%	60%	55%
Average Time to MS B (Days)	3418.01	3305.44	3200.75	3139.95
Standard Deviation (Days)	1701.08	1628.08	1599.04	1553.38
P-Value		0.392	0.099	0.032
Conclusion		Fail to Reject H_0	Fail to Reject H_0	Reject H_0

As seen in Table 6, it is evident that the time to MS B is not sensitive to an earlier start time for SE activities when the KPP process time is set to the default distribution. In fact, when the start time is at 50%, 33%, and 25% of the contract time, the time to MS B, standard deviation of time to MS B, and p-value are identical. This is due to the hold module in the SE path described earlier. As previously discussed, in order for the SE activities to begin, a percent of the contract must elapse and the KPPs must be complete. Once the SE activities start time occurs earlier than 50% of the contract length, the KPPs completion is the determining factor of the SE activity start time.

Table 7 takes this into account by reducing the KPPs' process time to a point where it does not dictate the start of the SE activities. As seen in Table 7, it is evident that when SE activities begin at 60% of the contract length or later, there will not be a statistically significant decrease in the time to MS B. However, when SE activities begin at 55% of the contract length or sooner and the KPPs' generation processes are shortened to the same degree, the model exhibits a statistically significant decrease in time to MS B.

Conclusions

The critical path analysis performed in this research indicated that the SE activities and their communication with the requirements branch are the bottleneck of the Pre-MS B portion of the acquisition system. In addition, the research indicated that focusing on reforms that address this bottleneck has the potential to decrease the total time spent on MS B activities by approximately 7%; this corresponds to a process time reduction of approximately six months.

This research also tested two strategies to address this bottleneck. The first was reducing the process time of all SE activities. The second was to allow the SE activities to have an earlier start time. This research showed that the latter policy has the potential to be the most beneficial. This research showed that the process times for all SE activities must be decreased by approximately 50% in order for a statistically significant decrease in time to MS B to occur. This degree of process time reduction may be infeasible. On the other hand, allowing the SE activities to occur after 55% of the contract time has elapsed rather than the current 75% produces a statistically significant decrease in time to MS B.

The increased sensitivity of program time to start time, rather than process length, suggests that schedule benefits may be achieved if the some resources, both financial and human, are transferred from the SE activities to the activities prior to test and development. However, this re-allocation of resources must be accompanied by responsiveness from the JCIDS branch, which is the branch that generates the KPPs. This research indicates that there was a large amount of co-dependence between the JCIDS and SE activities and that communication and coordination between these branches is needed in order to address the bottleneck.

References

Al-Harbi, K. M. (2001). Application of the AHP in project management. *International Journal of Project Management, 19*(1), 19–27.

Arena, M. V., Obaid, Y., Galway, L. A., Fox, B., Graser, J. C., Sollinger, J. M., … Wong, C. (2006). *Impossible certainty: Cost risk analysis for Air Force systems* (MG-415-AF). Santa Monica, CA: RAND.

Brown, M. M., Flowe, R. M., & Hamel, S. P. (2007). *The acquisition of joint programs: The implications of interdependencies.* Washington, DC: Office of the Secretary of Defense.

CJCS. (2012). *Joint Capabilities Integration and Development System* (CJCS Instruction 3170.01H). Retrieved from http://www.dtic.mil/cjcs_directives/cdata/unlimit/3170_01.pdf

Drezner, J. A., & Smith, G. K. (1990). *An analysis of weapon system acquisition schedules* (RAND/R-3937-ACQ). Santa Monica, CA: RAND.

Houston, D. (2012). *Enterprise requirements and acquisition model.* Unpublished manuscript.

Leach, D., & Searle, C. (2011). *Department of Defense enterprise requirements and acquisition model* (Unpublished master's thesis). Air Force Institute of Technology, Wright-Patterson AFB, OH.

McNutt, R. T. (1999). *Reducing DoD product development time: The role of the schedule development process.* Wright-Patterson AFB, OH: Air Force Institute of Technology.

Monaco, J. V., & White, E. D., III. (2005). Investigating schedule slippage. *Defense Acquisition Review Journal, 12*(2), 176–193.

Montgomery, J. (2012). *Department of Defense update to the enterprise requirements and acquisition model* (Unpublished master's thesis). Air Force Institute of Technology, Wright-Patterson AFB, OH.

OUSD(AT&L). (2008, December 8). *Operation of the defense acquisition system* (DoD Instruction 5000.02). Washington, DC: Author.

Schwartz, M. (2010). *Defense acquisitions: How DoD acquires weapon systems and recent efforts to reform the process.* Washington, DC: Congressional Research Service.

Sullivan, M. J., Andrew, C., Bowman, R., Fairbairn, B., Neill, S., Oppenheim, J., & Schwenn, R. (2009). *Defense acquisitions: Measuring the value of DOD's weapon programs requires starting with realistic baselines* (DTIC document).

Tyson, K. W., Nelson, J. R., Om, N. I., & Palmer, P. R. (1989). *Acquiring major systems: Cost and schedule trends and acquisition initiative effectiveness* (IDA-P-2201). Alexandria, VA: Institute for Defense Analyses.

Weapon System Acquisition Reform Act of 2009, 10 U.S.C. (2009).

Wirthlin, J. R. (2009). *Identifying enterprise leverage points in defense acquisition program performance* (Doctoral dissertation). Massachusetts Institute of Technology, Cambridge, MA.

Wirthlin, J. R., Houston, D. X., & Madachy, R. J. (2011). Defense acquisition system simulation studies. In *Proceedings of the 2011 International Conference on Software and Systems Process* (pp. 189–193).

Acknowledgements

This publication was developed under work supported by the Naval Postgraduate School Acquisition Research Program Assistance Agreement No. N6227112MPZG201 "Enterprise Requirements and Acquisition Model (ERAM) Analysis and Extension," awarded by the Naval Supply Systems Command (NAVSUP) Fleet Logistics Center San Diego (NAVSUP FLC San Diego). It has not been formally reviewed by NPS.

Disclaimer

The views and conclusions contained in this document are those of the authors and should not be interpreted as necessarily representing the official policies, either expressed or implied, of NPS, NAVSUP FLC San Diego, or the U.S. Air Force. NPS, NAVSUP FLC San Diego, and the U.S. Air Force do not endorse any products or commercial services mentioned in this publication.

ACQUISITION RESEARCH PROGRAM
GRADUATE SCHOOL OF BUSINESS & PUBLIC POLICY
NAVAL POSTGRADUATE SCHOOL
555 DYER ROAD, INGERSOLL HALL
MONTEREY, CA 93943

www.acquisitionresearch.net