A NEW BROADBAND PULSED HIGH VOLTAGE MONITOR *

W. R. Cravey, Bob Anderson, Paul Wheeler, Dave Kraybill, Nicole Molau, and Deborah Wojtowicz

University of California, Lawrence Livermore National Laboratory
Livermore, California 94550

Abstract

Experimental results of a new GHz-bandwidth diagnostic for measuring pulsed high voltage are presented. The probe is a small helical coil that self-magnetically insulates to prevent turn-to-turn flashover. A small external B-dot sensor measures I-dot, the time rate of change of current in the probe. The voltage to be measured is equal to L•I-dot. This paper describes the experimental apparatus used to measure a 1 MV, 60 ns pulse with a rise time of 1.5 ns generated by LLNL's 2MV accelerator[1]. Excellent agreement is obtained when comparing the output of the new probe with a conventional resistive divider technique. The major difference in the temporal shape of the waveforms was determined to be caused by the bandwidth limitation of the resistive divider probe.

Introduction

The measurement of a high voltage fast rise time pulse across a vacuum gap is a technical challenge. Capacitive dividers are sensitive to stray charges and are difficult to calibrate. Resistive dividers have limited bandwidth since they must be long and fabricated very carefully to avoid surface flashover. This paper describes two experiments using a new, high bandwidth, high voltage probe. The first experiment was a high impedance test and was designed to use the probe[2] to measure a high voltage pulse at the end of a vacuum insulated transmission line (VITL). Principles of operation, failure modes, and frequency response of the probe where a few of the questions to be answered from the high impedance experiment. A low impedance experiment was also performed in which the probe was used to measure the voltage across a vacuum diode at the end of a three meter magnetically insulated pulse sharpening line (MITL). The MITL and the VITL were driven by the LLNL 2 MV accelerator.

Principles of Operation

Except for small terms due to inductance of leads and the leakage inductance between turns, the inductance of a wire-wound helical coil depends only on its radius, length, and number of turns, not on the wire diameter. Therefore, even if the wire should expand from heating, or if it is magnetically pinched, the inductance of the helix remains relatively constant. Since the inductance is constant, the output voltage is L•I-dot.

Turn-to-turn flashover is prevented by having sufficient spacing between turns and by limiting the impedance across the gap (including the coil inductance). Then, when the electric field at the wire surface reaches field-emission threshold, there will be sufficient magnetic flux between adjacent turns to magnetically insulate against turn-to-turn flashover.

High Impedance Test

Experimental Setup

The first experiment was conducted on a vacuum insulated transmission line (VITL), see Figure 1. The VITL was driven by a 1 MV, 60 ns, 1.5 ns rise time pulse from the LLNL 2 MV accelerator[1]. The compact voltage probe (CVP) was connected across the vacuum end of the line.

Diagnostics used on the line included resistive voltage probes, B-dot sensors, and a framing camera. Two voltage probes were used on the experiment, a proven resistive divider probe and the new probe. High speed optical diagnostics were used to measure the coil's mechanical movement as a function of time and the onset of flashover phenomena. The resistive voltage probe was used as a voltage monitor for comparison with the CVP output. B-dot probes were placed on the VITL to measure the current through the line.

Failure Modes

Two failure tests were conducted on the CVP to check its robustness against flashover. First, the self-magnetic field was reduced by increasing the inductance of the CVP by increasing the turns radius of the coil. The CVP was found to self insulate as predicted[2].

* This work was performed under the auspices of the U.S. Department of Energy by Lawrence Livermore National Laboratory under Contract No. W-7405-ENG-48

Report Documentation Page

Form Approved
OMB No. 0704-0188

Public reporting burden for the collection of information is estimated to average 1 hour per response, including the time for reviewing instructions, searching existing data sources, gathering and maintaining the data needed, and completing and reviewing the collection of information. Send comments regarding this burden estimate or any other aspect of this collection of information, including suggestions for reducing this burden, to Washington Headquarters Services, Directorate for Information Operations and Reports, 1215 Jefferson Davis Highway, Suite 1204, Arlington VA 22202-4302. Respondents should be aware that notwithstanding any other provision of law, no person shall be subject to a penalty for failing to comply with a collection of information if it does not display a currently valid OMB control number.

1. REPORT DATE	2. REPORT TYPE	3. DATES COVERED
JUN 1989	**N/A**	**-**

4. TITLE AND SUBTITLE **A New Broadband Pulsed High Voltage Monitor**	5a. CONTRACT NUMBER 5b. GRANT NUMBER 5c. PROGRAM ELEMENT NUMBER
6. AUTHOR(S)	5d. PROJECT NUMBER 5e. TASK NUMBER 5f. WORK UNIT NUMBER
7. PERFORMING ORGANIZATION NAME(S) AND ADDRESS(ES) **University of California, Lawrence Livermore National Laboratory Livermore, California 94550**	8. PERFORMING ORGANIZATION REPORT NUMBER
9. SPONSORING/MONITORING AGENCY NAME(S) AND ADDRESS(ES)	10. SPONSOR/MONITOR'S ACRONYM(S) 11. SPONSOR/MONITOR'S REPORT NUMBER(S)

12. DISTRIBUTION/AVAILABILITY STATEMENT
Approved for public release, distribution unlimited

13. SUPPLEMENTARY NOTES
See also ADM002371. 2013 IEEE Pulsed Power Conference, Digest of Technical Papers 1976-2013, and Abstracts of the 2013 IEEE International Conference on Plasma Science. Held in San Francisco, CA on 16-21 June 2013. U.S. Government or Federal Purpose Rights License.

14. ABSTRACT
Experimental results of a new GHz-bandwidth diagnostic for measuring pulsed high voltage are presented. The probe is a small helical coil that self-magnetically insulates to prevent turn-to-tum flashover. A small external B-dot sensor measures !-dot, the time rate of change of current in the probe. The voltage to be measured is equal to Lâ¢Idot. This paper describes the experimental apparatus used to measure a 1 MV, 60 ns pulse with a rise time of 1.5 ns generated by LLNL's 2MV accelerator1 . Excellent agreement is obtained when comparing the output of the new probe with a conventional resistive divider technique. The major difference in the temporal shape of the waveforms was determined to be caused by the bandwidth limitation of the resistive divider probe.

15. SUBJECT TERMS

16. SECURITY CLASSIFICATION OF:			17. LIMITATION OF ABSTRACT	18. NUMBER OF PAGES	19a. NAME OF RESPONSIBLE PERSON
a. REPORT	b. ABSTRACT	c. THIS PAGE			
unclassified	**unclassified**	**unclassified**	**SAR**	**4**	

Next, the electric field breakdown of the CVP was tested by reducing the gap between turns on the coil. The gap was reduced by using a ribbon conductor instead of a round wire, Figure 2. Both tests were successful in showing that the coil remained in magnetic insulation, and there was no observed electrical field breakdown.

Frequency Response

One of the most distinguishing characteristics of the probe is its bandwidth. The frequency response of the probe was measured using the cold test setup shown in Figure 3. The CVP was setup in the same manner as in the MITL experiment, except the line was driven with a 35 volt pulse with a rise time of 100 ps. The input of the line signal was measured with a 7854 oscilloscope. The output was taken from a B-dot probe near the CVP. The B-dot probes were calibrated in an air line. The measured bandwidth was approximately 4 GHz.

Knowing that the output signal is proportional to I-dot, VOUT was determined. The input was deconvolved from VOUT to obtain the impulse response. Analysis of this data indicates the bandwidth of the new probe to be 2.5 GHz, see Figure 4.

Lifetime Tests

A framing camera was used to measure the lifetime of the coil by observing its mechanical change. Figure 5 shows the results of one test for a time of 1.3 microseconds after the CVP was excited. The CVP was found to stay intact for several microseconds which was adequate for the intended use.

Low Impedance Test

Experimental Layout

A 6 Ω , 3 meter, magnetically insulated transmission line (MITL) was connected to the the output of the LLNL 2 MV accelerator for the low impedance test of the compact voltage probe. The CVP was connected to the MITL via a low inductance connection as shown in Figure 6. Diagnostics for the low impedance tests consisted of B-dot probes, x-ray diodes, a RC integrator and a Faraday Cup.

Disruption of MITL Power Flow

It was of interest to know how the power flow of the MITL would be interrupted by the CVP. The power flow test was done by recording the current of the MITL using a Faraday Cup at the end of the line past the CVP as shown in Figure 6. The current was also measured without the CVP on the line. Illustrated in Figure 7 is the output of the Faraday cup with and without the CVP on the line. The current flow past the probe was inhibited by approximately a factor of 2.

Temporal Characteristics

Temporal characteristics were compared by integrating the B-dot output,which is proportional to the voltage, and comparing this output with the voltage at the probe. The output of the B-dot was integrated in two ways: digitally from the oscilloscope signal, and with an RC integrator placed in series with the line. Output wave forms of all three signals are shown in Figure 8. Excellent agreement was found between the temporal characteristics of all three signals. The high frequency structure appearing on the pulse is due to the probe's higher bandwidth.

Linearity

The linearity of the probe was checked by varying the output voltage of the accelerator and comparing this change in output with the output of the CVP. This test showed that the compact voltage probe was linear over a broad range of line voltages which is of great importance in high voltage measurements. The results of this test are illustrated in Figure 9.

Conclusion

The CVP-VITL experiment was successful in showing that the probe does magnetically insulate and is robust to designed electrical fields, against wire mechanical changes, and to higher impedances(lower insulating fields). The results of comparing the temporal waveforms from the two voltage probes was excellent. The new probe shows more high frequency structure on the pulse, which is attributed to the probe's higher bandwidth of 2.5 GHz. The probe was found to stay intact for a long period of time (i.e. microseconds). The CVP also performed well in the low impedance tests. The measured signal gain was linear over greater than a factor of 2. Overall the probe preformed as expected and the result were excellent.

References

1. "Megavolt Accelerator", Freytag, E. K. and Di Capua, M., Thrust Area Report, Lawrence Livermore National Laboratory, UCRL-53700, 1985.

2. Inductive Voltage Divider, Wheeler, Paul C., Lawrence Livermore National Laboratory, UCID 20521, 1985.

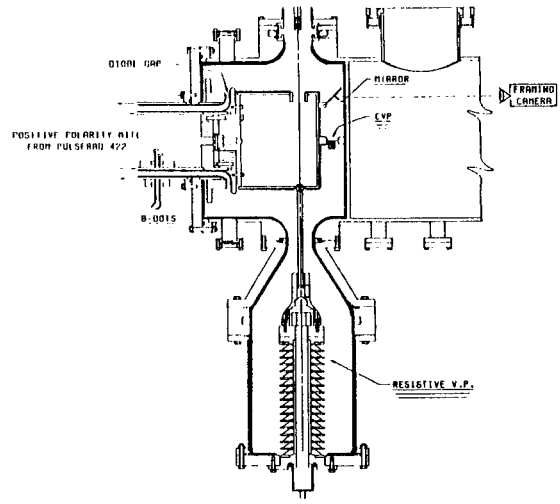

Figure 1. High impedance vacuum insulated transmission line.

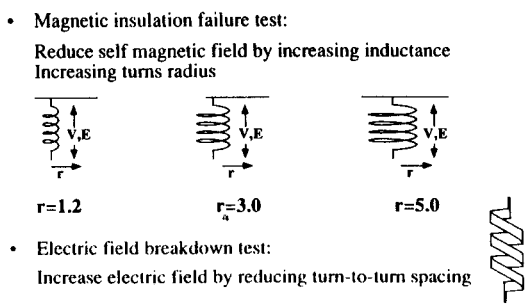

Figure 2. Failure mode tests.

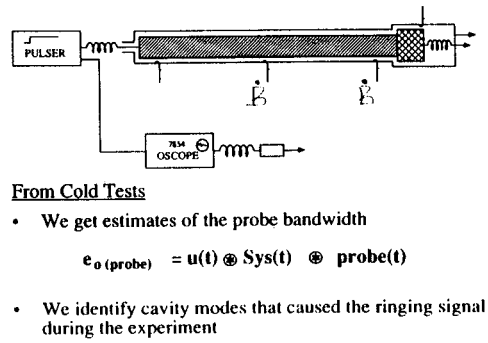

Figure 3. Schematic of cold test.

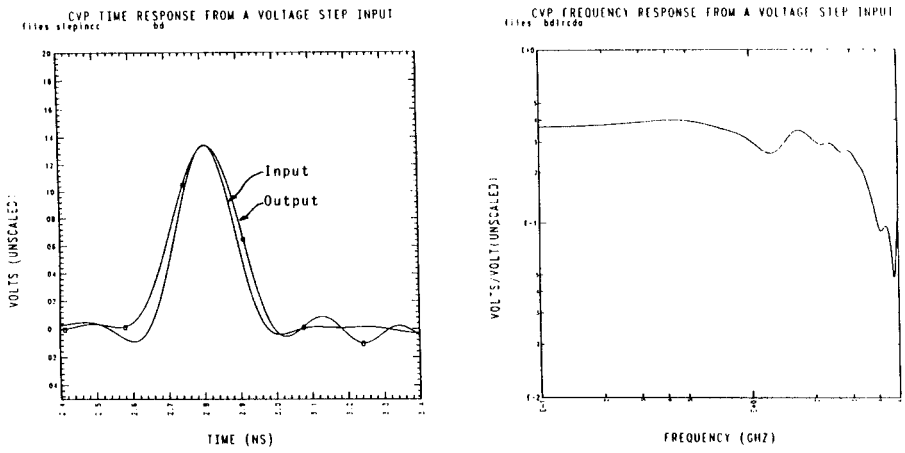

Figure 4. Response from cold test data.

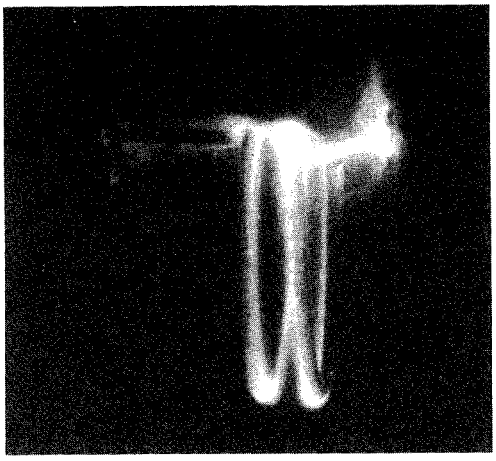

Figure 5. Framing camera photograph taken 1.3 μs after voltage pulse with a 10 nanosecond exposure.

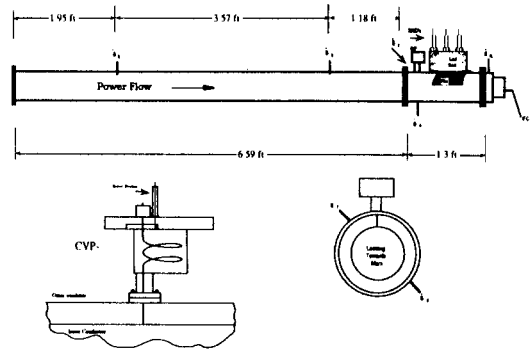

Figure 6. Low impedance magnetically insulated transmission line.

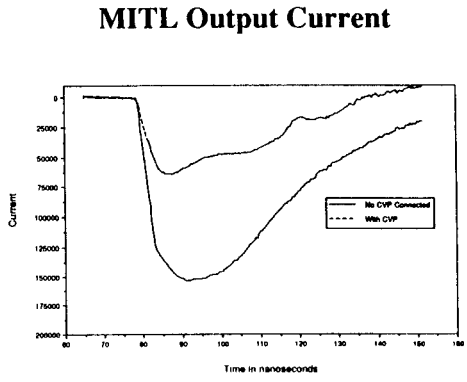

Figure 7. Power Flow disruption in MITL.

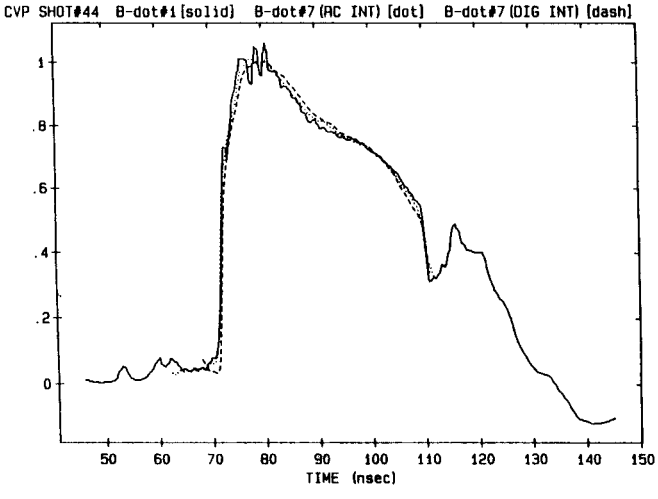

Figure 8. Temporal characteristics of compact voltage probe.

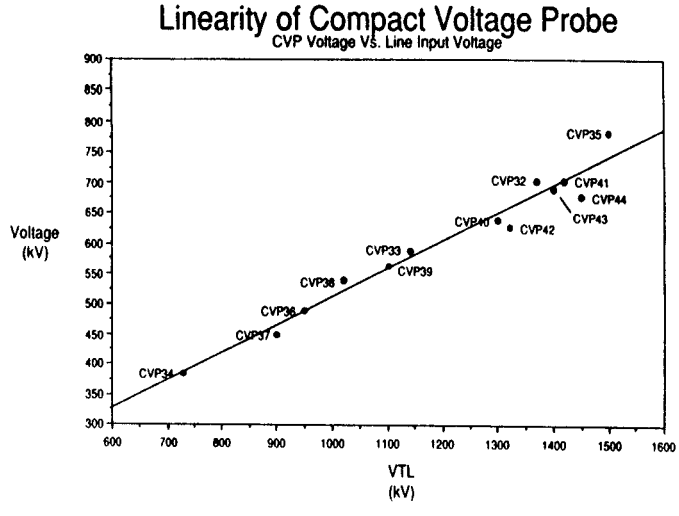

Figure 9. Linearity of compact voltage probe.