UNCLASSIFIED

AD NUMBER

ADB015471

NEW LIMITATION CHANGE

TO

Approved for public release, distribution unlimited

FROM

Distribution authorized to U.S. Gov't. agencies only; Test and Evaluation; Mar 1976. Other requests shall be referred to Commander, Edgewood Arsenal, Attn: SAREA-TS-R, Aberdeen Proving Ground, MD 21010.

AUTHORITY

EA ltr, 28 Sep 1977

THIS PAGE IS UNCLASSIFIED

THIS REPORT HAS BEEN DELIMITED
AND CLEARED FOR PUBLIC RELEASE
UNDER DOD DIRECTIVE 5200.20 AND
NO RESTRICTIONS ARE IMPOSED UPON
ITS USE AND DISCLOSURE.

DISTRIBUTION STATEMENT A

APPROVED FOR PUBLIC RELEASE;
DISTRIBUTION UNLIMITED.

AD-

ADB015471

AD No.
DDC FILE COPY

EDGEWOOD ARSENAL CONTRACTOR REPORT

EM-CR-77008

EA-5161

EVALUATION OF VIOLET SMOKE INITIATION UNDER DYNAMIC CONDITIONS IN THE JET AIRMIX BLENDER

by

F. L. McIntyre

DDC
DEC 13 1976

November 1976

NASA NATIONAL SPACE TECHNOLOGY LABORATORIES
GENERAL ELECTRIC COMPANY
RANGE AND TEST SERVICES
BAY ST. LOUIS, MISSISSIPPI 39520

Contract No. NAS8-27750

DEPARTMENT OF THE ARMY
Headquarters, Edgewood Arsenal
Aberdeen Proving Ground, Maryland 21010

Distribution limited to US Government agencies only because of test and evaluation; March 1976. Other requests for this document must be referred to Commander, Edgewood Arsenal, Attn: SAREA-TS-R, Aberdeen Proving Ground, Maryland 21010.

DISCLAIMER

The findings in this report are not to be construed as an official Department of the Army position unless so designated by other authorized documents.

DISPOSITION

Destroy this report when no longer needed. Do not return to originator.

UNCLASSIFIED

SECURITY CLASSIFICATION OF THIS PAGE (When Data Entered)

(19) **REPORT DOCUMENTATION PAGE**

READ INSTRUCTIONS BEFORE COMPLETING FORM

(18) 1. REPORT NUMBER: EM-CR-76

2. GOVT ACCESSION NO.

3. RECIPIENT'S CATALOG NUMBER

(6) 4. TITLE (and Subtitle): Evaluation of Violet Smoke Initiation Under Dynamic Conditions in the Jet Airmix Blender.

(9) 5. TYPE OF REPORT & PERIOD COVERED: Technical Memo[redacted] Feb-Jun 76 February 1976 [redacted] 1976

(14) 6. PERFORMING ORG. REPORT NUMBER: EA-5161

(10) 7. AUTHOR(s): Fred L. McIntyre

8. CONTRACT OR GRANT NUMBER(s): NASA-27750 MIPR B4061

9. PERFORMING ORGANIZATION NAME AND ADDRESS: NASA National Space Technology Laboratories General Electric Company Engineering and Science Services Laboratory Bay St. Louis, MS 39520

10. PROGRAM ELEMENT, PROJECT, TASK AREA & WORK UNIT NUMBERS: PEMA 4932 Project 5744099

11. CONTROLLING OFFICE NAME AND ADDRESS: Commander, Edgewood Arsenal Attn: SAREA-MT-TS Aberdeen Proving Ground, MD 21010

(11) 12. REPORT DATE: Nov[redacted] 1976

13. NUMBER OF PAGES: 14

14. MONITORING AGENCY NAME & ADDRESS (if different from Controlling Office): Commander, Edgewood Arsenal Attn: SAREA-MT-TS Aberdeen Proving Ground, MD 21010

(12) 14p.

15. SECURITY CLASS. (of this report): UNCLASSIFIED

15a. DECLASSIFICATION/DOWNGRADING SCHEDULE: N/A

16. DISTRIBUTION STATEMENT (of this Report)

Distribution limited to US Government agencies only because of test and evaluation; March 1976. Other requests for this document must be referred to Commander, Edgewood Arsenal, Attn: SAREA-TS-R, Aberdeen Proving Ground, MD 21010.

17. DISTRIBUTION STATEMENT (of the abstract entered in Block 20, if different from Report)

(15) NAS8-27750

18. SUPPLEMENTARY NOTES

19. KEY WORDS (Continue on reverse side if necessary and identify by block number)

Pyrotechnic	Initiation Sensitivity	Fire Brands
Jet Airmix	Static State	Dust Explosion
Pneumatic or Dispersive Mixing	Hazards Evaluation	
Testing	Dynamic State	

20. ABSTRACT (Continue on reverse side if necessary and identify by block number)

Empirical safety data was generated from a single initiation of 454 kg (1000 pounds) of Violet Smoke Mix IV, Drawing Number B143-5-1 during dynamic mixing conditions in a simulated Jet Airmix Blender. The test was performed to determine whether mass detonation or a dust explosion would occur if violet smoke were thermally ignited during the height of maximum pneumatic dispersion. The data obtained under these "worst-case" conditions indicate that minimal risk or hazards may be →

DD FORM 1 JAN 73 1473 EDITION OF 1 NOV 65 IS OBSOLETE

UNCLASSIFIED

SECURITY CLASSIFICATION OF THIS PAGE (When Data Entered)

409145

20 cont'd
attached to the charging, blending, and discharging of the Airmix Process during the production of up to 454 kg (100 pounds) of Violet Smoke Mix IV per Drawing Number B143-5-1, provided that appropriate fire control measures are used.

PREFACE

The investigation described in this report was authorized under PEMA 4932, MIPR B4061, Project 5744099, and TWR EA-3761. It was performed at the NASA National Space Technology Laboratories (NSTL) for the Edgewood Arsenal Resident Laboratory (EARL) and NASA-NSTL by the General Electric Company under Contract No. NAS8-27750. Activity was initiated October 1975 and completed April 1976.

Reproduction of this document in whole or in part is prohibited except with permission of the Commander, Edgewood Arsenal, Attn: SAREA-TS-R, Aberdeen Proving Ground, Maryland 21010; however, DDC is authorized to reproduce the document for United States Government purposes.

The use of trade names in this report does not constitute an official endorsement or approval of the use of such commercial hardware or software. This report may not be cited for purposes of advertisement.

The information in this document has not been cleared for release to the general public.

ACKNOWLEDGMENT

Acknowledgments are extended for the technical assistance of test support personnel of the NSTL Kellar Road Test Range.

TABLE OF CONTENTS

SECTION NO.	TITLE	PAGE NO.
1.0	INTRODUCTION	5
1.1	Objective	5
1.2	Authority	5
1.3	Background	5
2.0	EXPERIMENTAL PROCEDURE	5
2.1	Blending	5
2.2	Full-Scale Thermal Ignition Test	5
2.3	Instrumentation	6
3.0	RESULTS	7
3.1	Test Results	7
3.2	Discussion	7
4.0	CONCLUSIONS	12
	REFERENCES	12
	DISTRIBUTION LIST	13/14

LIST OF TABLES

TABLE NO.	TITLE	PAGE NO.
1	Test Results of Thermal Ignition of 454 kg Violet Smoke Mix IV During Dynamic (Maximum Pneumatic Dispersion) State	7
2	Chronology of Events for Thermal Ignition of Violet Smoke Mix IV During Dynamic Pneumatic Dispersion	8
3	Comparison of Test Results of 454 kg (1000 pounds) Violet Smoke Mix IV Thermally Ignited in Static (At Rest) and Dynamic (Pneumatic Dispersion) States	8
4	Comparison of Chronology of Events for 454 kg (1000 pounds) Violet Smoke Mix IV in the Jet Airmix Blender Thermally Ignited During Static and Dynamic States	10

LIST OF ILLUSTRATIONS

FIGURE NO.	TITLE	PAGE NO.
1	Typical Full-Scale Blending Test Setup	6

TABLE OF CONTENTS (Cont'd)

FIGURE NO.	TITLE	PAGE NO.
2	Temperature Measurements of 454 kg (1000 Pounds) Violet Smoke IV Thermally Ignited During Maximum Dispersive Mixing	9
3	Temperature Comparison Between Dynamic and Static State of 454 kg (1000 Pounds) Thermally Ignited in the Jet Airmix Blender	11

EVALUATION OF VIOLET SMOKE INITIATION UNDER

DYNAMIC CONDITIONS IN THE JET AIRMIX BLENDER

1.0 INTRODUCTION

1.1 Objective. The objective of this study was to generate empirical safety data from initiation of 454 kg (1000 pounds) of Violet Smoke Mix IV, Drawing Number B143-5-1 during dynamic mixing conditions in the Sprout-Waldron Model 12-35 Jet Airmix* Blender. Specifically, the test was performed to determine whether mass detonation or a dust explosion would occur if the Violet Smoke Mix were thermally initiated during a period of maximum pneumatic dispersion.

1.2 Authority. The work described in this report was authorized by National Space Technology Laboratories Technical Work Request Number EA-5161 dated October 1974.

1.3 Background. An extensive sequence of tests performed during 1973[1], 1974[2], and 1975[3, 4] provided a data base for determining the hazards associated with blending 984 kg and 454 kg of HC white smoke and sulfur based colored smoke, respectively, in the Jet Airmix blender. The Edgewood Arsenal Manufacturing Technology Directorate requested that an additional test be performed in the Jet Airmix blender utilizing 454 kg of violet smoke mix to determine whether an explosion would result upon initiation during maximum pneumatic dispersion. The data obtained would be utilized by cognizant safety organization to certify mixing 454 kg quantities of sulfur-based smokes in the Jet Airmix blender.

2.0 EXPERIMENTAL PROCEDURE

2.1 Blending. Components of Violet Smoke Mix IV consisting of 109 kg (240 pounds) of sodium bicarbonate, 41 kg (90 pounds) sulfur, 113 kg (250 pounds) of potassium chlorate and 191 kg (420 pounds) of violet dye were placed in the Model 12-35 Jet Airmix Simulator (2) and blended. The blending cycle consisted of a 2-second pneumatic pulse followed by a 4-second settling time period, (PAUSE) repeated five times for a total blend time of 30 seconds. A total of three cycles were performed. Upon completion of the third blend cycle a core sample consisting of approximately 2.2 kg (5 pounds) was taken and burned to determine homogeneity and burn rate characteristics. Upon completion of the burn rate test [3] in a vee shaped trough 4.8 cm (1-7/8 inches) high by 9.8 cm (3-7/8 inches) base and 137.2 cm (54 inches) long, an additional blend cycle was performed prior to the thermal ignition test.

2.2 Full-Scale Thermal Ignition Test. This test was performed to determine if mass detonation or pneumatic rupture of the Jet Airmix blender would occur due to a single heat source initiation in the maximum dust concentration during maximum pneumatic dispersion. The final blend of 454 kg of violet smoke had been verified by the burn rate comparison

*Trade name of the Sprout-Waldron Company for a unit produced under a patent purchased from Grun, Lissberg, Germany.

test [3] and visual observation. A single 3-gram charge of UTC 3001 propellant* was placed inside the blender 46 cm (18 inches) from the top and 15 cm (6 inches) from the side of the blender. Utilizing a single continuous pulse of air, it was determined by remote visual observation (CCTV) that maximum pneumatic dispersion had occurred after approximately 3 seconds. The propellant was then ignited by an electric squib. Measurements of surface temperature of the blender, internal pressure, and MOPIC were used to indicate whether pneumatic rupture, fire brands, or mass detonation occurred.

2.3 Instrumentation. Two chromel/alumel thermocouples were attached to the exterior surface of the blender at two locations 180° apart near the base. The thermocouples were connected to a Pace Model Number BRJW13A-24TT-1517 Thermocouple Reference Junction via underground cabling to the test control center (TCC) where signals were recorded on a Honeywell Model 1612 Visicorder Oscillograph operated at 1 inch per second. A single pressure transducer BLH Model Number 151-HAC-134, 0 to 138 kPa (0 to 20 psig) was mounted 144 cm (56.5 inches) from the top of the blender and connected via underground cabling to a Dynamic Model Number 6457 DC amplifier prior to input to the Oscillograph. Temperature and pressure data were thus displayed in real time. Figure 1 shows the instrumentation setup. Photographic coverage consisted of stills, 24 frames per second 16 mm and a 20 frames per second 70 mm Hulcher camera.

*United Technology Corporation (UTC) 3001 propellant consisting of an intimate mixture of ammonium perchlorate, PBAN and aluminum.

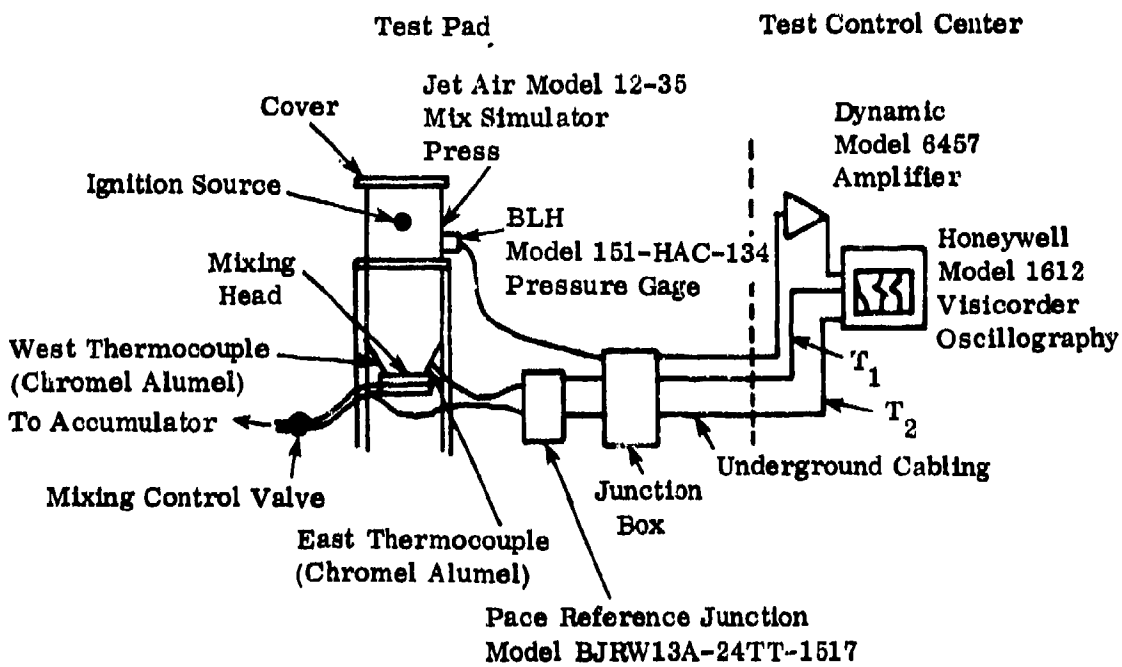

Figure 1. Typical Full-Scale Blending Test Setup

3.0 RESULTS

3.1 Test Results. Data from the temperature and pressure measurements and visual observations are shown in Tables 1 and 2 and Figure 2.

Table 1. Test Results of Thermal Ignition of 454 kg Violet Smoke Mix IV During Dynamic (Maximum Pneumatic Dispersion) State

Test material and weight kg (pounds)	Occurrence of mass detonation	Pneumatic rupture of container	Total burn time (sec)	Maximum surface temperature °C (°F)	Maximum internal pressure kPa (psig)	Gross reaction rate kg/sec
Violet smoke mix IV 454 (1000)	No	No	175	333.9 (633)	8.27 (1.2)	2.23

3.2 Discussion. The sequence of events from motion picture analyses, shown in Table 2, indicated that high order deflagration occurred in air-suspended material that had been ejected from the simulator after the cover blew off. Approximately 1/5 of the contents appeared to be so ejected into a dust cloud, and some evidence of a low order detonation was observed approximately 1.5 seconds after the cover had relieved. The resulting fireball completely engulfed the blender and attained a maximum diameter of about 10 meters. After this external fireball had subsided, the main body of material still within the blender was observed to burn for approximately 15 seconds. A gradually declining column of smoke with no flame evident was emitted from the blender top for over 2 minutes after these events.

A comparison between data obtained from this test and from the previous test using thermal ignition with the material at rest is shown in Tables 3 and 4 and Figure 3. Significant differences were obtained for maximum skin temperature, internal pressure and overall reaction rate in the two tests. The temperature values for the dynamic test were approximately twice that obtained for the static test, as a result of the large external fireball. The internal pressure that was observed prior to the cover being removed and somewhat reduced from that of the static test. While this early pressure relief resulted in longer total burn time, it also resulted in enhanced dust cloud formation around the perimeter of the mixer.

Characteristics of the external dust deflagration are difficult to determine; however, the evidence indicates fast reaction of the dispersed material in air, ignited by firebrands thrown from the primary mass of burning material within the blender. A loud report was observed during the height of the external fireball, although the blast pressure evidently was extremely low and occasioned no physical damage to the instrumental setup. Observation of the motion pictures shows that approximately 1-1/2 seconds of time would be available for detection and quenching of the fire within the blender prior to the external deflagration. A pressure relief system, ultraviolet detector and appropriate deluge apparatus as recommended previously [4], is thus considered desirable.

Table 2. Chronology of Events for Thermal Ignition of Violet Smoke Mix IV During Dynamic Pneumatic Dispersion

Time (sec)	Event
T_o	Ignition
T + 0.5	First visible smoke
T + 1.75	First firebrand detected
T + 2.6	Additional firebrands
T + 3.7	Fire and eruption of smoke from blender (top cover relieved)
T + 4.3	Initial dust explosion top of mixer
T + 5.2	Dust explosion of unburned materials outside mixer
T + 6.0	Maximum fireball diameter (16.5 meters)
T + 11.4	Flame and black smoke erupting
T + 14.5	Minor explosion above mixer
T + 17.5	Black smoke (chugging)
T + 53.0	Violet smoke
T + 73.0	Minimum smoke
T + 175.0	Reaction complete

Table 3. Comparison of Test Results of 454 kg (1000 pounds) Violet Smoke Mix IV Thermally Ignited in Static (At Rest) and Dynamic (Pneumatic Dispersion) States

	Test material kg (pounds)	Total burn time (sec)	Gross reaction rate kg/sec	Maximum temperature °C (°F)	Quasi-static pressure kPa (psig)
Dynamic state (pneumatic dispersive mixing) thermally ignited	454 (1000)	175	2.23	333.9 (633)	8.27 (1.2)
Static state (at rest) thermally ignited	454 (1000)	110	4.13	154.4 (309.9)	34.5 (5)

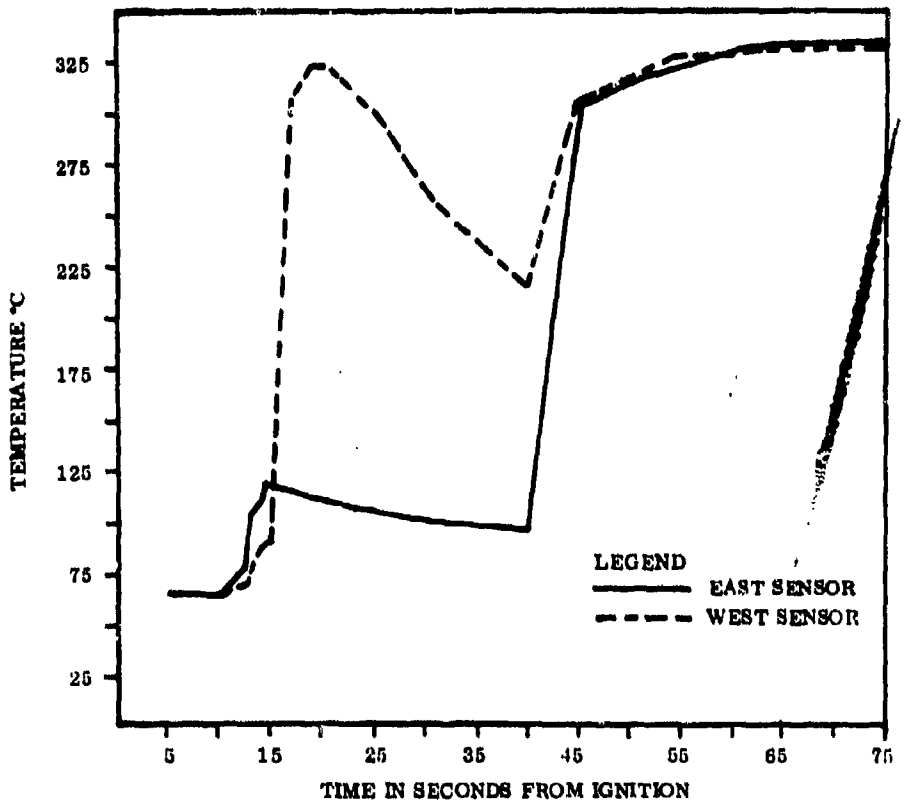

Time	East °C	West °C
5	65.6	65.6
10	65.6	65.6
15	118.1	90.8
20	110.3	324.2
25	106.4	302.8
30	102.5	263.9
35	100.6	258.5
40	98.6	213.5
45	304.6	306.7
50	316.4	318.3
55	322.2	328.1
60	331.9	328.1
65	333.9	331.9
70	333.9	331.9
75	333.9	331.9

Figure 2. Temperature Measurements of 454 kg (1000 Pounds) Violet Smoke IV Thermally Ignited During Maximum Dispersive Mixing

Table 4. Comparison of Chronology of Events for 454 kg (1000 pounds) Violet Smoke Mix IV in the Jet Airmix Blender Thermally Ignited During Static and Dynamic States

Event dynamic pneumatic mixing	Time	Event static (at rest)
Ignition	T_o	Ignition
First visible smoke	T + 0.5	
	T + 0.75	First visible smoke
First firebrand detected	T + 1.75	
Additional firebrand detected	T + 2.6	
	T + 2.75	Small fireball detected at discharge valve
	T + 3.1	Firebrand detected
Fire and eruption of smoke from top of blender (top cover relieved)	T + 3.7	
Initial dust explosion (top of mixer)	T + 4.3	
Deflagration of suspended unburned material outside mixer	T + 5.2	
Maximum fireball diameter (16.5 meters)	T + 6.0	Total viewing area obscured (maximum smoke)
Flame and black smoke erupting	T + 11.4	
Minor explosion above mixer	T + 14.5	
	T + 16.0	Mixer visible again
Black smoke (chugging)	T + 17.5	
	T + 36.0	Small fire detected 20 feet to right at base of mixer
Violet smoke	T + 53.0	
	T + 55.0	Minimum smoke
Minimum smoke	T + 73.0	
	T + 75.0	Smoke turning black
	T + 110	Reaction complete
Reaction complete	T + 175.0	

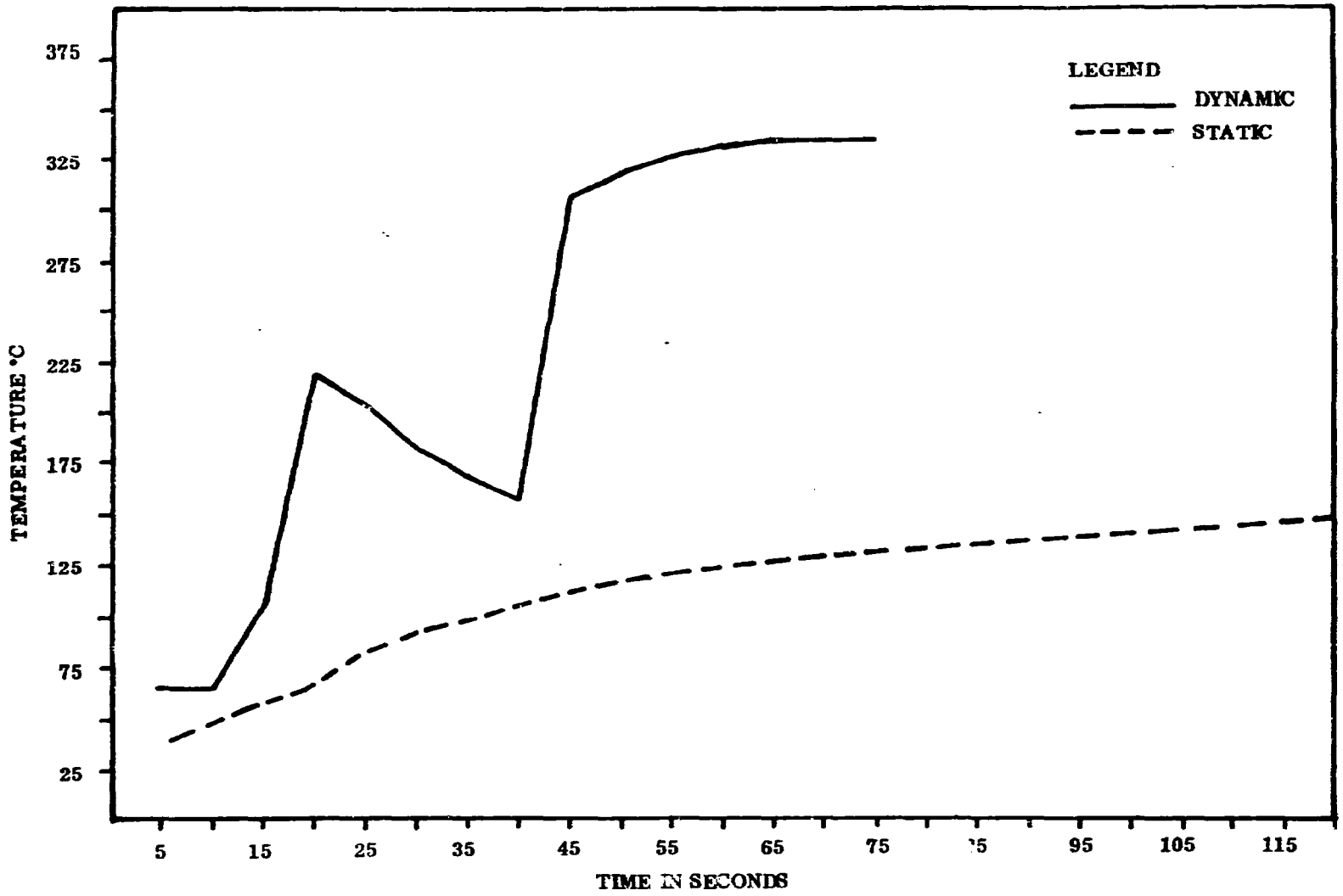

Figure 3. Temperature Comparison Between Dynamic and Static State of 454 kg (1000 Pounds) Thermally Ignited in the Jet Airmix Blender

4.0 CONCLUSIONS

Conclusions from this test are:

- The reaction showed no tendency toward mass detonation when 454 kg (1000 pounds) of Violet Smoke Mix IV, Drawing Number B143-5-1, was subjected to thermal initiation during maximum pneumatic dispersion in a full-scale Jet Airmix configuration.

- Several minor and one larger dust deflagration occurred outside the mixer. These reactions gave some evidence of a low-order detonation.

- Gross reaction rate for this test was less than that of the static state test due to vending of the reaction through the top.

- Potential hazards associated with pneumatic dispersive mixing are thermal in nature rather than that of mass detonation and will require detection and quenching apparatus for control of fires external to the blender.

REFERENCES

1. Final Report EA-FR-1H0X, Electrostatic Hazard Evaluation of Pneumatic Dispersive Mixing Operation, June 1973. A. H. Lasseigne.

2. Final Report EA-FR-4D21, Identification of Hazards Associated with Blending of HC White Smoke by Jet Airmix Process, January 1974, F. L. McIntyre.

3. Final Report, EM-CR-75001, EA-4D91, Identification and Evaluation of Hazards Associated with Blending of Violet Smoke Mix by Jet Airmix Process, March 1975, F. L. McIntyre.

4. Final Report EM-CR-76012, EA-6103, Engineering Study of Jet Airmix Fire Suppression, August 1975, F. L. McIntyre.

DISTRIBUTION LIST

Addressee	No. of Copies
Commander US Army Armament Command ATTN: Safety Office Rock Island Arsenal Rock Island, IL 61201	2
Commander Picatinny Arsenal ATTN: Safety Office Dover, NJ 07801	2
Commander Pine Bluff Arsenal ATTN: Safety Office Pine Bluff, AR 71601	1
Commander Frankford Arsenal ATTN: Safety Office Bridge and Tacony Streets Philadelphia, PA 19137	1
Commander Rocky Mountain Arsenal ATTN: Safety Office Denver, CO 80240	1
Director National Aeronautics and Space Administration ATTN: Safety Office Washington, DC 20546	1
Director NASA National Space Technology Laboratories ATTN: Safety Office Bay St. Louis, MS 39520	1
Commander Edgewood Arsenal ATTN: SAREA-MT-C	1
SAREA-MT-TL	4
SAREA-SA	2
SAREA-TS-L	5
SAREA-TS-R Aberdeen Proving Ground, MD 21010	1

Commander US Army Armament Command ATTN: AMSAR-MT (CPT Lewis) Rock Island Arsenal Rock Island, IL 61201	1
Chairman Department of Defense Explosives Safety Board Forrestal Building, GB-270 Washington, DC 20314	1
Commander US Army Materiel Command ATTN: Safety Office AMCSA-BC (COL Aaron) 5001 Eisenhower Avenue Alexandria, VA 22333	 2 1
Office of the Project Manager for Munition Production Base Modernization and Expansion ATTN: AMCPM-PBM-E (Mr. Dybacki) USA Materiel Command Dover, NJ 07801	1
Director US Army Ballistics Research Laboratories ATTN: Safety Office Aberdeen Proving Ground, MD 21005	1
Director Defense Research & Engineering Pentagon Washington, DC 20310	2
Record Copy Commander Aberdeen Proving Ground ATTN: STEAP-AD-R/RHA APG-Edgewood Area, Bldg E5179 Aberdeen Proving Ground, MD 21010	1
Administrator Defense Documentation Center ATTN: Accessions Division Cameron Station Alexandria, VA 22314	2
Director of Procurement ATTN: Contracting Officer's File Aberdeen Proving Ground, MD 21010	1