UNCLASSIFIED

AD NUMBER

ADB022950

NEW LIMITATION CHANGE

TO

Approved for public release, distribution unlimited

FROM

Distribution authorized to U.S. Gov't. agencies only; Test and Evaluation; NOV 1976. Other requests shall be referred to Air Force Flight Dynamics Laboratory, ATTN: AFFDL/FEM, Wright-Patterson AFB, OH 45433.

AUTHORITY

ASD ltr dtd 18 May 1983

THIS PAGE IS UNCLASSIFIED

AFFDL-TR-77-20
VOLUME I

AD B022950

FINAL REPORT GRAPHITE COMPOSITE LANDING GEAR COMPONENTS TECHNICAL DISCUSSION VOLUME I

HERCULES INCORPORATED, SYSTEMS GROUP
BACCHUS WORKS, MAGNA, UTAH

JUNE 1977

TECHNICAL REPORT AFFDL-TR-77-20, VOLUME I

FINAL REPORT FOR PERIOD FEBRUARY 1973 - FEBRUARY 1977

DDC
RECEIVED
NOV 16 1977
A

AD No.
DDC FILE COPY

Distribution limited to U. S. Government agencies only; test and evaluation; statement applied November 1976. Other requests for this document must be referred to Air Force Flight Dynamics Laboratory (AFFDL/FEM) Wright-Patterson Air Force Base, Ohio 45433.

AIR FORCE FLIGHT DYNAMICS LABORATORY
AIR FORCE WRIGHT AERONAUTICAL LABORATORIES
AIR FORCE SYSTEMS COMMAND
WRIGHT-PATTERSON AIR FORCE BASE, OHIO 45433

NOTICE

When Government drawings, specifications, or other data are used for any purpose other than in connection with a definitely related Government procurement operation, the United States Government thereby incurs no responsibility nor any obligation whatsoever; and the fact that the government may have formulated, furnished, or in any way supplied the said drawings, specifications, or other data, is not to be regarded by implication or otherwise as in any manner licensing the holder or any other person or corporation, or conveying any rights or permission to manufacture, use, or sell any patented invention that may in any way be related thereto. Distribution limited to U.S. Government agencies only; test and evaluation; statement applied June 1977. Other requests for this document must be referred to Air Force Flight Dynamics Laboratory (AFFDL/FEM), WPAFB, Ohio 45433.

This technical report has been reviewed and is approved for publication.

George J. Sperry
Acting Technical Manager
Special Projects Group
Vehicle Equipment Division
Air Force Flight Dynamics Laboratory

Howell K. Brewer
Dr. Howell K. Brewer, Chief
Mechanical Branch
Vehicle Equipment Division
Air Force Flight Dynamics Laboratory

FOR THE COMMANDER

Ambrose B. Nutt, Director
Vehicle Equipment Division
Air Force Flight Dynamics Laboratory

Copies of this report should not be returned unless return is required by security considerations, contractual obligations, or notice on a specific document.

AIR FORCE/56780/25 October 1977 — 250

UNCLASSIFIED

SECURITY CLASSIFICATION OF THIS PAGE (When Data Entered)

REPORT DOCUMENTATION PAGE

READ INSTRUCTIONS BEFORE COMPLETING FORM

1. REPORT NUMBER: AFFDL-TR-77-20, [redacted] Vol-1

2. GOVT ACCESSION NO.

3. RECIPIENT'S CATALOG NUMBER

4. TITLE (and Subtitle): [redacted] GRAPHITE COMPOSITE LANDING GEAR COMPONENTS, TECHNICAL DISCUSSION.

5. TYPE OF REPORT & PERIOD COVERED: FINAL REP[redacted]T. FEB[redacted] [redacted]73 — FEB[redacted] [redacted]77

6. PERFORMING ORG. REPORT NUMBER

7. AUTHOR(s): L. C. Jensen, H. L. Pritt

8. CONTRACT OR GRANT NUMBER(s): F33615-72-C-1725

9. PERFORMING ORGANIZATION NAME AND ADDRESS: HERCULES INCORPORATED, SYSTEMS GROUP, BACCHUS WORKS, MAGNA, UTAH 80441

10. PROGRAM ELEMENT, PROJECT, TASK AREA & WORK UNIT NUMBERS: [redacted] 1369, Task 136903, Work Unit 13690338

11. CONTROLLING OFFICE NAME AND ADDRESS: AIR FORCE FLIGHT DYNAMICS LABORATORY/FEM, WRIGHT-PATTERSON AIR FORCE BASE, OHIO 45433

12. REPORT DATE: Jun[redacted] [redacted]77

13. NUMBER OF PAGES: ~~116~~ 127p.

14. MONITORING AGENCY NAME & ADDRESS (if different from Controlling Office)

15. SECURITY CLASS. (of this report): UNCLASSIFIED

15a. DECLASSIFICATION/DOWNGRADING SCHEDULE

16. DISTRIBUTION STATEMENT (of this Report)

DISTRIBUTION LIMITED TO U.S. GOVERNMENT AGENCIES ONLY: TEST AND EVALUATION: [redacted]ENT APPLIED NOVEMBER 1976. OTHER REQUESTS FOR THIS DOCUMENT MUST BE TO AIR FORCE FLIGHT DYNAMICS LABORATORY (AFFDL/FEM), WPAFB, OHIO 45433

17. DISTRIBUTION STATEMENT (of the abstract entered in Block 20, if different from Report)

18. SUPPLEMENTARY NOTES

THIS FINAL REPORT IS CONTAINED IN TWO VOLUMES
VOLUME I TECHNICAL DISCUSSION
VOLUME II APPENDICES

19. KEY WORDS (Continue on reverse side if necessary and identify by block number)

LANDING GEAR	A37B AIRCRAFT	LANDING GEAR GEOMETRY
OUTER CYLINDER	TORQUE ARM ATTACHMENT	LANDING GEAR DESIGN LOADS
TRUNNION	SIDE BRACE ATTACHMENT	LANDING GEAR FABRICATION
GRAPHITE EPOXY	COMPOSITE MATERIAL	LANDING GEAR LAB TEST

20. ABSTRACT (Continue on reverse side if necessary and identify by block number)

(See Reverse Side)

DD FORM 1 JAN 73 1473 EDITION OF 1 NOV 65 IS OBSOLETE

UNCLASSIFIED

SECURITY CLASSIFICATION OF THIS PAGE (When Data Entered)

402 250

The objectives of this effort were to determine the feasibility of, and the weight and cost savings from the manufacture of a direct replacement landing gear for current Air Force aircraft which is composed of component hardware that is fabricated from graphite epoxy material to the maximum extent possible. Prior to the start of this effort, direct replacement torque arm and side brace components for the A37B aircraft landing gear had been qualified for flight use which were fabricated from epoxy materials to the maximum extent possible. Both of these components were lighter than the existing metallic components. It was projected that the fabrication cost of the side-brace in production quantities would be less than the existing metallic component. Under a separate In-House Work Unit, the graphite epoxy side brace successfully passed extensive laboratory environmental and in-service flight testing. The major task under this effort was the design, fabrication and qualification of an A37B aircraft outer cylinder/trunnion fabricated from graphite epoxy material to the maximum extent possible. After three trunnion design and fabrication iterations, the effort was terminated. Based on current graphite epoxy design and fabrication limitations, it was determined that a successful direct replacement trunnion could not now be fabricated due to existing landing gear compartment and other space limitations. The effort demonstrated that the complex trunnion could be designed and fabricated using an optimum amount of graphite epoxy material with a weight saving of 21 percent in comparison to existing metallic hardware. Potential weight and cost savings exist for the fabrication of new aircraft landing gear trunnions from graphite epoxy material, where the trunnion design is not limited by existing space limitations. Future graphite epoxy material and/or manufacturing improvements could make the fabrication direct replacement trunnion components feasible and profitable.

FOREWORD

This report was prepared by Hercules Incorporated, Bacchus Works, Magna, Utah under United States Air Force Contract F33615-72-1725, Project 1369, Task 03, Graphite Composite Landing Gear Components. The program was administered by the Air Force Flight Dynamics Laboratory, Wright-Patterson Air Force Base, Ohio, under the direction of Gerald C. Shumaker (AFFDL/FEM).

This is Volume I of the final report two volumes, covering the work performed from February 28, 1973 to February 1977. Volume II of the report contains the appendices. Hercules personnel directly participating on the program were:

Program Manager	L. C. Jensen
Program Engineer	H. L. Pritt
Fabrication Engineer	J. Witzel
Design Supervisor	J. N. Burns
Design Engineer	E. R. Torres
Design Engineer	R. E. Thompson

The report was submitted by the authors for publication as a Technical Report in June 1977.

TABLE OF CONTENTS

Section		Page
I	INTRODUCTION	1
II	DESIGN AND ANALYSIS	
	A. Design Requirements	5
	1. Gear Geometry	8
	2. Design Loads	8
	B. Material Properties	8
	1. Metals	8
	2. Hysol EA-9309 Adhesive	8
	C. Component Design	15
	1. Outer Cylinder/Trunnion	15
	2. Side Brace Attachment	30
	3. Torque Arm Attachment	30
	4. Inner Sleeve	40
III	FABRICATION AND TOOLING	
	A. Torque Arm Attachment	45
	B. Side Brace Attachment	45
	C. Inner Sleeve	61
	D. Gussets	61
	E. Outer Cylinder/Trunnion	61
	1. First Outer Cylinder/Trunnion Design	72
	2. Second Outer Cylinder/Trunnion Design	72
	3. Modified Second Design of Outer Cylinder/ Trunnion	72
	4. Third and Final Design of Outer Cylinder/Trunnion	78
	5. Bonding of Outer Cylinder/Trunnion Assembly	78
IV	TESTING	
	A. Torque Arm Attachment Static Test	88
	B. Side Brace Attachment Static Test	93
	C. Landing Gear Tests at Cessna Aircraft	93
	1. Test Results of First Design	99
	2. Test Results of Second Design	104
	3. Test Results of Modified Second Design	104

ACCESSION for
NTIS White Section ☐
DDC Buff Section ☒
UNANNOUNCED ☐
JUSTIFICATION.....
BY .....
DISTRIBUTION/AVAILABILITY CODES
Dist. AVAIL. and/or SPECIAL
B

PRECEDING PAGE NOT FILMED

LIST OF ILLUSTRATIONS

Figure	Title	Page
1	Metal Production A37B Main Landing Gear	2
2	Final Design of A37B Graphite Composite Landing Gear Assembly	3
3	Outer Cylinder/Trunnion	6
4	Landing Gear Geometry	9
5	Landing Gear Design Loads	11
6	First Design of A37B Graphite Composite Outer Cylinder/ Trunnion	16
7	Alternate Proposal Design for A37B Graphite Composite Outer Cylinder/Trunnion	17
8	Alternate Side Plate Design for A37B Graphite Composite Outer Cylinder/Trunnion	18
9	Design 2, A37B Graphite Composite Outer Cylinder/Trunnion	21
10	Design 2, A37B Graphite Composite Landing Gear	22
11	Modified Second Design of A37B Graphite Composite Outer Cylinder/Trunnion	23
12	Third Design of A37B Graphite Composite Outer Cylinder/ Trunnion	24
13	Side View of Third Design A37B Graphite Composite Outer Cylinder/Trunnion	25
14	Major Sections Analyzed	28
15	Side Brace Attachment, Drawing 83008S00433	33
16	Side Brace Attachment Outer Ring	35
17	Torque Arm Attachment, Drawing 83008S00432	36
18	Torque Arm Attachment Outer Ring	38
19	Torque Arm Attachment Spacer Block made from Random Chopped Graphite Composite	39

LIST OF ILLUSTRATIONS (Cont)

Figure	Title	Page
20	A37B Graphite Composite Inner Sleeve	42
21	Internal Arrangement for Graphite Composite A37B Landing Gear	43
22	Drawing Tree - Third and Final Design.	44
23	Torque Arm Attachment, Drawing 83008S00432	46
24	Inner Ply Insert Mold, Drawing 83008S00437	48
25	Exterior Band Set Mold, Torque Arm Attachment, Drawing 83008S00438.	49
26	Torque Arm Attachment Preform Layup.	50
27	Layup Tool, Torque Arm Attachment, Drawing 83008S00439 .	51
28	Side Brace Attachment, Drawing 83008S00433	53
29	Top View Position of Acute-Corner Preform.	55
30	End View Position of Acute-Corner Preform.	56
31	Exterior Band Set Mold, Side Brace Attachment, Drawing 83008S00441.	57
32	Side Brace Attachment Preform Layup.	58
33	Layup Tool, Side Brace Attachment, Drawing 83008S00445 .	59
34	Inner Sleeve, Drawing LCJ370001.	62
35	Inner Sleeve Mandrel, Drawing LCJA370002	63
36	First Trunnion Mandrel Assembly.	64
37	Second Trunnion Mandrel Assembly, Drawing 83008S00633. .	66
38	Trunnion Layup Detail for $\pm 45^{\circ}$ Plies, Full Coverage. . .	68
39	Trunnion Layup Detail for 0° Plies	69
40	Trunnion Layup Detail for 90° Plies, Full Coverage . . .	70
41	Trunnion Layup Detail for $\pm 45^{\circ}$ Reinforcement Plies . . .	71

LIST OF ILLUSTRATIONS (Cont)

Figure	Title	Page
42	First Design Trunnion Layup Sequence	73
43	Trunnion Machining Arrangement, Drawing A37B10	74
44	Second Design Trunnion Layup Sequence	75
45	Second Design Machined Configuration, Drawing LCJA37004, Rev B	76
46	Modified Second Design Machined Configuration, Drawing LCJA37004, Rev C	77
47	Trunnion Layup Detail for Reinforcement Plies	79
48	Trunnion Layup Sequence for Third Design	80
49	Third Design Machined Configuration, Drawing LCJA37004, Rev D	81
50	Outer Cylinder/Trunnion	82
51	Final Assembly Bonding Arrangement, A37B Landing Gear	83
52	Trunnion Gusset Location Detail	84
53	Trunnion Gusset Bore Detail	85
54	Pin Support Tube, Drawing A37B15	87
55	Torque Arm Attachment Test Fixture	89
56	Torque Arm Attachment Test Arrangement	91
57	Critical Landing Condition for Torque Arm Attachment	92
58	Side Brace Attachment Test Fixture	94
59	Side Brace Attachment Tension Test Arrangement	96
60	Side Brace Attachment Compression Test Arrangement . .	97
61	Critical Loading Condition for Side Brace Attachment	98

LIST OF ILLUSTRATIONS (Cont)

Figure	Title	Page
62	Load Directions for the Three Test Conditions	100
63	Landing Gear Installed in Wing Test Fixture	103
64	Strain Gage Locations, Condition 3 100% Limit Load . . .	105
65	Retraction Test Setup for Graphite Composite A37B Left MLG	106
66	Graphite Composite Gear Starting Retraction Cycle . . .	107
67	Graphite Composite Gear in Mid-Retraction Cycle	108
68	Graphite Composite Gear Entering Wing Well	109
69	Graphite Composite A37B Landing Gear Completely Retracted	110
70	Damage Locations	112
71	Strain Gage Locations, Condition 3 100% Limit Load Strains	113
72	Damage Locations	114

LIST OF TABLES

Table	Title	Page
1	Summary of Weights for Various Designs	7
2	Landing Gear Geometry	10
3	Ultimate Design Loads	12
4	Unidirectional Lamina Properties at 60 Percent Fiber Volume	14
5	Section Properties of Outer Cylinder/Trunnion Transition Area	27
6	Ultimate Loading Conditions (lb)	29
7	Gear Assembly Loads	29
8	Design Layup Schedule of Component Cross Sections . .	31
9	Ultimate Properties for 3501-6/AS Landing Gear Laminates	32
10	Load Schedule for Limit Strength Test	101
11	Load Schedule for Ultimate Strength Test	102
12	Load Schedule for Limit Strength Test	115
13	Load Schedule for Ultimate Strength Test	115

SECTION I

INTRODUCTION

The objective of Contract F33615-72-C-1725 was to demonstrate that the A37B aircraft main landing gear could be designed and fabricated with graphite composite to show a significant weight savings and that it could then successfully pass military specification static load tests. Requirements for the contract specified the maximum use of graphite composite material and geometric compatibility with existing A37B aircraft.

The program was phase oriented. Phase I included Component Design and Analysis, Fabrication Process Definition, Tooling Design, Test Planning, and Quality Assurance Planning. Phase II effort was involved with fabrication, testing, and reporting on the first assembly. Phase III effort was to redesign and fabricate three additional cylinder/trunnion assemblies and test two of them. Phase IV was for the final report effort. The existing metal production gear is shown in Figure 1, and the configuration of the final graphite composite outer cylinder/trunnion assembly is presented in Figure 2.

The approach to the first graphite composite cylinder/trunnion assembly was to design and fabricate a structure capable of withstanding load requirements when mounted on an A37B aircraft wing section. The significant feature of the initial concept was the conical ellipsoid shape of the trunnion to minimize shear stresses. This design, as well as subsequent designs, included the side brace and torque arm attachments which were fabricated as subcomponents and bonded to the outer cylinder. The piston/axle joint of the landing gear was not fabricated from composites due to geometry limitations. The first assembly was successfully load tested to 150 percent of limit loads with a weight savings of 20 percent over the metal gear. As a result of this successful demonstration, the contract was changed to design and test a flightweight gear which could be retracted into the wing.

Due to envelope restrictions, the upper trunnion cross section was reduced to an oval cross section. This design weighed 23.9 percent less than the existing metal gear. Full retractability was successfully demonstrated. However, the first structure of this second design failed at 90 percent of limit load in the springback mode. Failure occurred in the transition between the cylinder and trunnion flare section, just above the side brace attachment bracket.

A second modified version of the intermediate design was fabricated by adding material to the trunnion wall in the area that failed. The transition between the cylinder and trunnion flare was also made more gradual. When load tested, this unit withstood limit loads and ultimate loads, except for the springback mode. Failure occurred in the same region previously described.

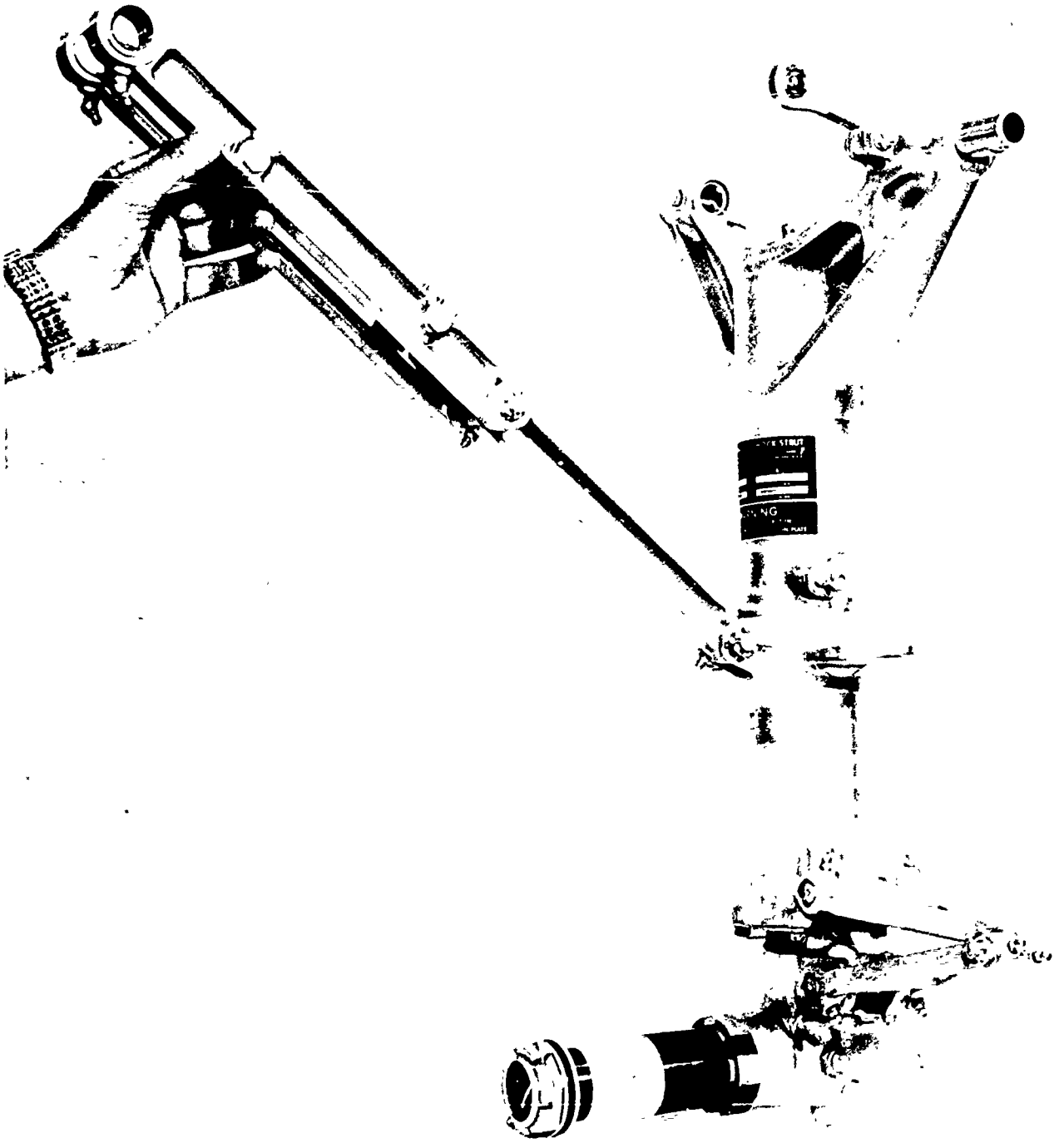

Figure 1. Metal Production A37B Main Landing Gea

Figure 2. Final Design of A37B Graphite Composite Landing Gear Assembly

After additional stress analysis, a final design was fabricated in which more material was added to the trunnion wall in the areas where the intermediate design failed. (See Figure 2.) Weight savings of this version were 21 percent less than the metal gear. However, this final design could not be fully retracted. This gear was delivered to AFFDL for drop testing.

Mandrel-type tooling was designed and fabricated based on low cost and past experience. Fabrication was by a combination of hand layup and filament winding, with intermediate heat compaction steps. Machining was performed with conventional equipment and processes. Successful design and fabrication of this complex structure from graphite composite has been demonstrated.

SECTION II

DESIGN AND ANALYSIS

The designs described in this report are based on previous structural experience, strength of materials, analyses of the use of composite interaction diagrams generated from the SQ-5 laminate properties computer program, and load-test results. Only limited finite-element analyses were employed on the structures because of prohibitive costs and because, in many cases, the grids would have been too coarse to obtain peak stresses.

Three designs of a graphite composite A37B main landing gear were made and fabricated during the contract. The initial design concept was a conservative approach which was to have the capability of withstanding all load tests but would not have retraction capability. Upon successful completion of load tests on the first design, a flightweight, retractable design was fabricated and tested. Although the second assembly was retractable, it failed prematurely during load tests. Failure was attributed to a wrinkle within the outer cylinder in the outer cylinder/trunnion transition area. A modified version of the second design (a more gradual transition from the outer cylinder surface to the trunnion) was fabricated with excellent quality throughout the structure. Although the third structure demonstrated a substantial load-carrying capability, it failed during 150 percent limit load test.

After a review of the designs and the envelope restrictions, Hercules fabricated a third design capable of passing all load and drop tests. The third design does not have a retraction capability. The graphite composite concept for all three designs is shown in Figure 3.

During the design of the first composite landing gear assembly, analysis showed that a weight penalty would be incurred if the piston/axle joint were fabricated from graphite composite. Thus, the components designed and fabricated on the contract were limited to the outer cylinder/trunnion assembly, the inner cylinder, side brace attachment, and the torque arm attachment. A steel piston/axle joint was assembled into the composite structure for load testing.

A weight comparison of the various designs is presented in Table 1.

D. DESIGN REQUIREMENTS

The ultimate load safety factor for the piston was set at 1.5 times limit (required by contract), while all other components used 1.875 times limit to account for uncertainties in property degradation due to manufacture. These values were further reduced to account for design assumptions.

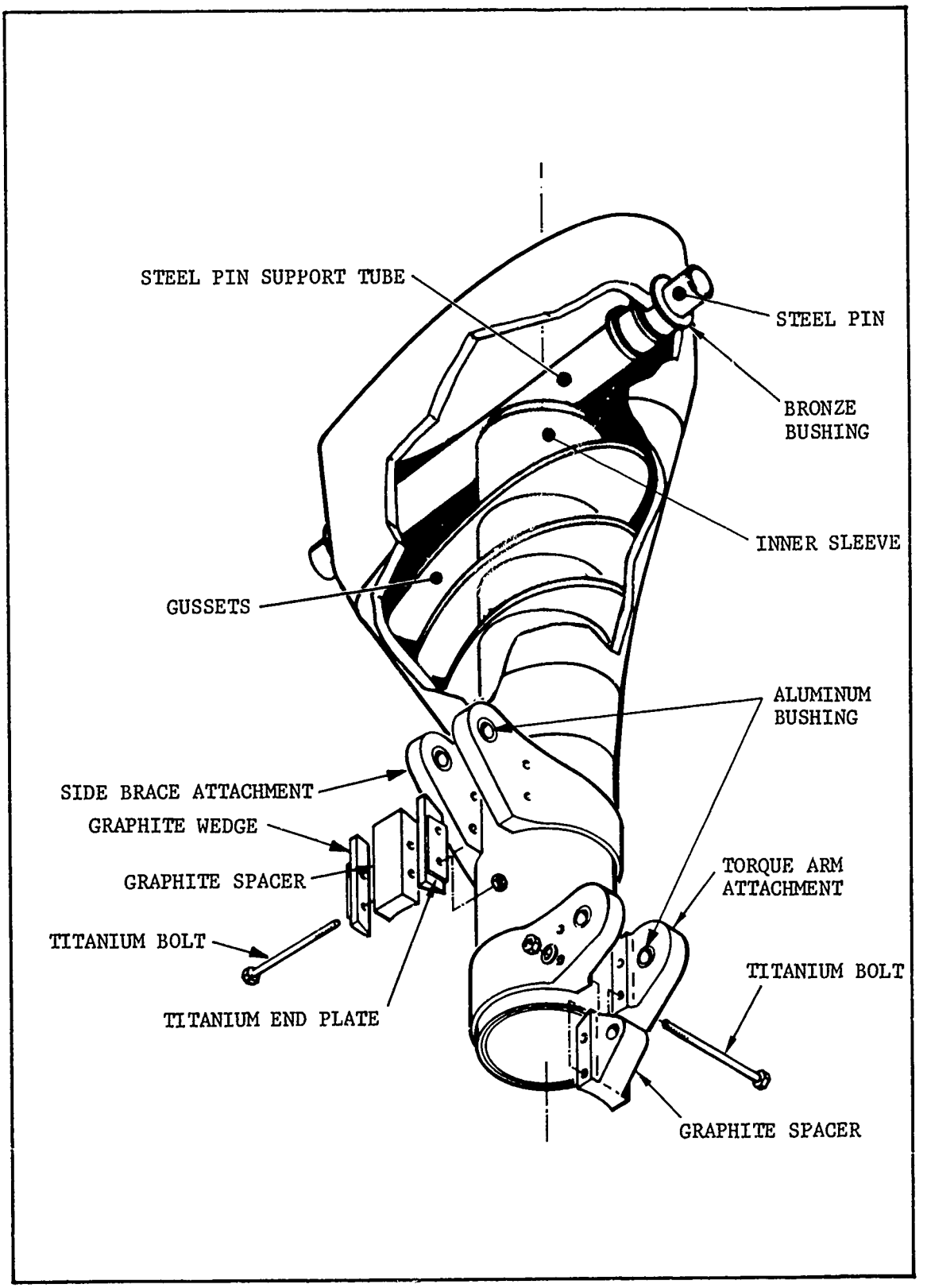

Figure 3. Outer Cylinder/Trunnion

TABLE 1

SUMMARY OF WEIGHTS FOR VARIOUS DESIGNS*

Component	Steel Production Gear	First Design	Second Design	Modified 2nd Design	Third Design
Outer cylinder/ trunnion	19.07	10.28	7.51	7.62	8.08
Pivot tube and bracket	--	2.13	3.37	3.37	3.37
Side brace attachment	--	1.18	1.11	1.11	1.11
Torque arm attachment	--	1.23	2.10**	2.10**	2.10**
Sleeve head cap	--	0.44	0.41	0.41	0.41
Total trunnion	19.07	15.26	14.50	14.61	15.07
Percent weight saving	--	20.0	24.0	23.4	21.0

*All weights in pounds

**Fabricated from steel to meet envelope requirements

1. Gear Geometry

The basic dimensions which determine the landing gear geometry are shown in Figure 4 and Table 2. Dimensions are shown for the original metal design, Bendix design, Bendix loads model, Hercules design, and Hercules loads model.

The Hercules designs will accept the original metal design side brace, torque arm, and wheel assemblies. Except for the third design, they will also connect to the A37B aircraft attachments provided for the original metal gear.

2. Design Loads

The graphite/epoxy composite landing gear was designed to accept the loads shown in the Bendix Third and Fourth Interim Reports (Contract F33615-69-C-1558). The basic loads and load model are shown in Figure 5 and Table 3.

B. MATERIAL PROPERTIES

1. Metals

The existing steel production landing gear for the A37B aircraft is made of 4340 steel (heat treated to 180 to 200 ksi-UTS). Metallics in the composite design include 7075-T6 aluminum and 6AL4V titanium. Properties at 77° F used for the metals were obtained from MIL-HDBK-5A.

2. Hysol EA-9309 Adhesive

Vendor-supplied properties for lap shear strength for Hysol EA-9309 adhesive are shown below. Margins of safety were based upon the use of the tensile lap shear value shown for the normal cure, room temperature cure.

	Test Temperatures		
Tensile Lap Shear (psi)	-67° F	75° F	180° F
Normal cure	5,000	4,750	750
180° F Postcure, 360 hour	---	5,400	1,900

3. Graphite Composite

Graphite/epoxy composite is the major structural material used in the landing gear design. Allowable design stresses were established by computation rather than by experiment. This was necessary because of the many different laminates considered in the design process. Costs for property determination by experimental testing would have been prohibitive. Hercules computer program 62113 (General Dynamics "Point Stress Laminate Analysis" program referred to as SQ-5) was used to predict laminate properties based upon experimental lamina (single ply) properties.

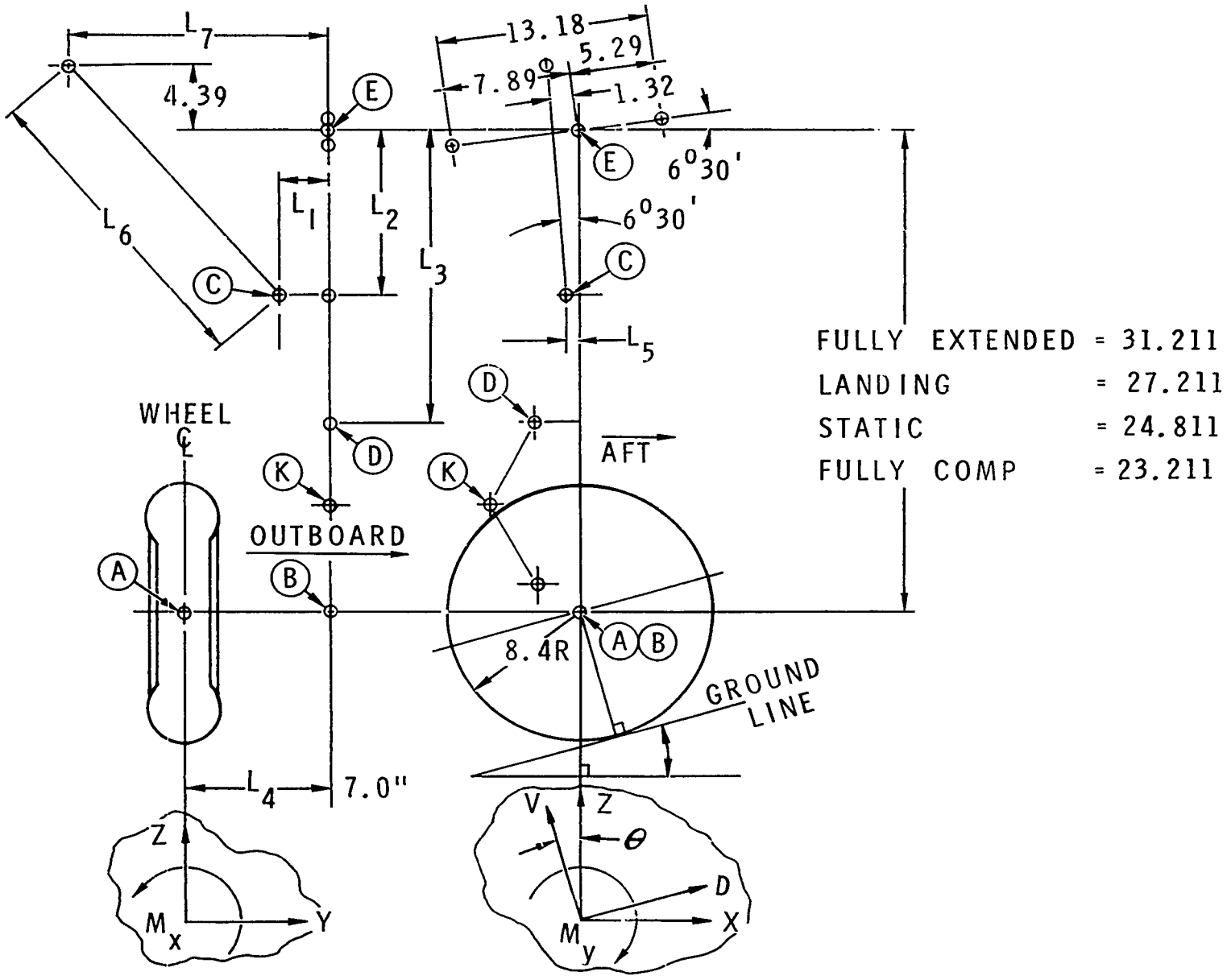

Figure 4. Landing Gear Geometry

TABLE 2

LANDING GEAR GEOMETRY

	L_1	L_2	L_3	L_4	L_5	L_6	L_7
Original gear	2.5	12.36		6.5	0.0	21.54	--
Bendix design	3.12	11.66	18,898	7.5	0.088	21.54	16.0
Bendix loads	3.12	11.66	18.15	7.5	0.0	20.56	15.75
Hercules design	3.25	12.86	18.15	7.5	-0.157	21.54	16.0
Hercules loads	3.12	11.66	18.15	7.5	0.0	20.56	15.75

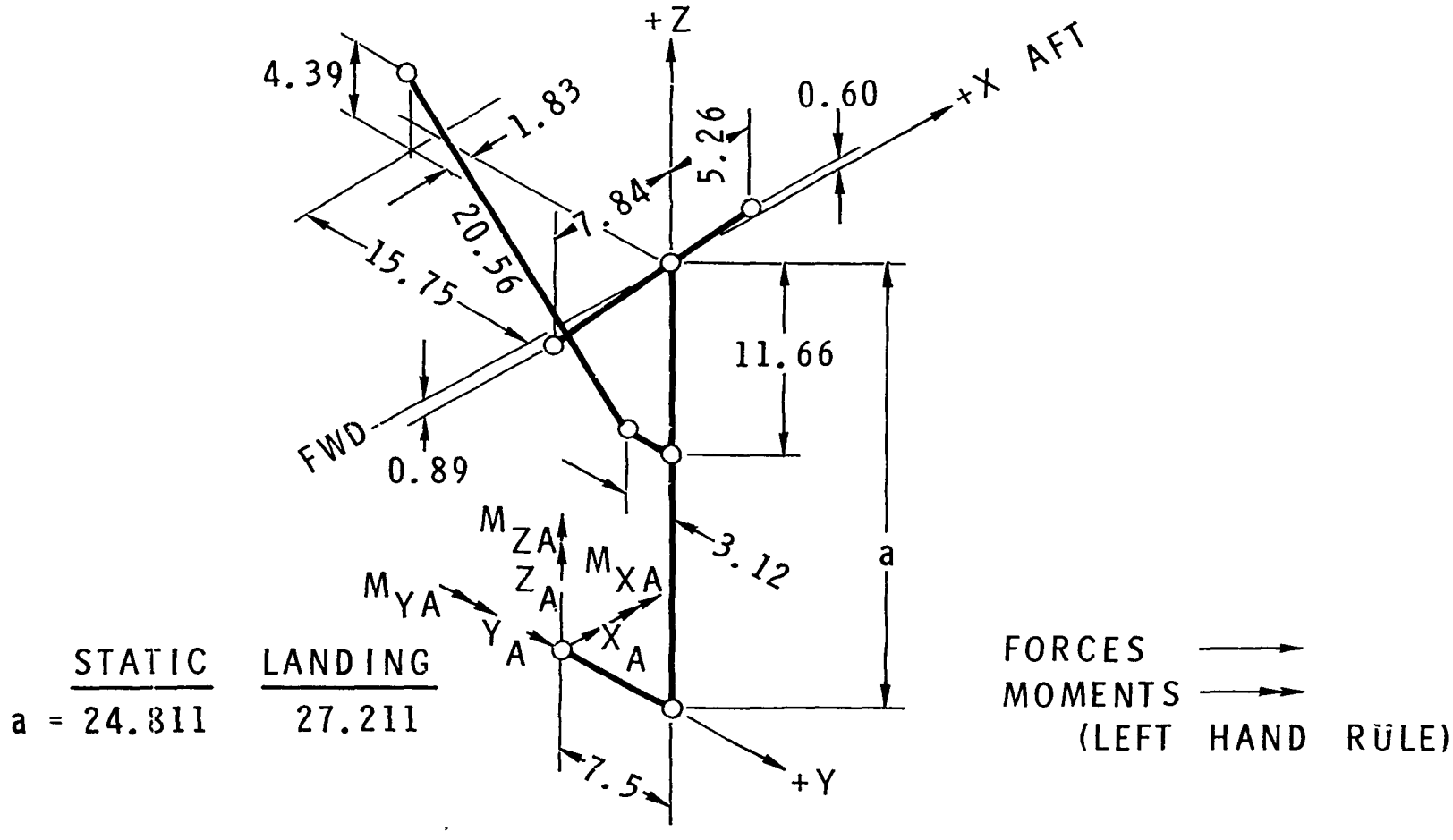

Figure 5. Landing Gear Design Loads

TABLE 3

ULTIMATE DESIGN LOADS

Load Condition			Z_A	X_A	Y_A	M_{ZA}	M_{XA}	M_{YA}
2 Pt Level Landing	Max Vertical	1A	15,000	-5,600	0	0	0	0
	Spin-Up	1B	7,700	7,300	0	0	0	0
	Spring Back	1C	11,700	-9,700	0	0	0	0
Tail Down Landing	Max Vertical	2A	13,900	-9,600	0	0	0	0
	Spring Back	2C	8,300	-1,040	0	0	0	0
Drift Landing	Right	3A	7,700	- 900	4,700	4,400	38,800	0
	Left	3B	7,700	- 900	-6,200	-5,900	-51,700	0
Braked Roll		4A	11,400	7,200	0	0	0	-70,600
Reverse Brake		5A	9,500	-9,500	0	0	0	70,600
Right Turn		6A	11,500	-1,300	-5,800	-5,500	-48,000	0
3G Taxi		7	19,200					

A "limit design philosophy" was used in predicting the design properties. Lamina (single ply or single layer in a laminate) transverse stress-strain curves can exhibit nonlinearities close to the ultimate material strength. Shear stress-strain curves have been shown to be continuously nonlinear. Because of the nonlinearities, linear mathematical models like SQ-5 incur inaccuracies when predicting properties near the ultimate strength of the composite. The limit design philosophy requires that limit design loads be utilized and design strength allowables be selected in the area of the proportional limits.

The limit design philosophy for composites is presented in the Air Force Structural Design Guide for Advanced Composite Application as criteria B, page 10.2.3. The design criteria for ultimate and limit loads are defined as follows:

(a) Design ultimate loads shall result in a stress that does not exceed the ultimate allowable stress for the laminate used, where ultimate allowable stress is the maximum laminate stress attainable without rupture of any lamina.

(b) Design limit loads, as defined by the vehicle specifications, shall result in a stress that does not exceed the limit allowable stress for the laminate used, where limit allowable stress is that stress beyond which no lamina suffers intolerable degradation or stiffness and permanent deformation.

The limit strengths predicted for use in landing gear design were calculated by using the above criteria. An ultimate-to-limit ratio of 1.5 (safety factor required for landing gear) was applied to experimentally determined lamina strain data. The resulting limit strains and lamina typical elastic constants (Table 4) were used as input to computer program SQ-5 to predict laminate strength properties. The relationship of ultimate strength to limit strength for the laminates is:

$$\text{Ultimate Strength} \geq K \times \text{Limit Strength} = 1.5 \times \text{Limit Strength}$$

In the design of the various landing gear components, only 80 percent of the predicted limit strengths were used. This was done to account for uncertainties in property degradation due to the complexity of manufacture, except for the piston, where full limit strength was used because geometric limitations limited thickness.

The majority of components were designed using $(0_N, \pm 45)$ or $(0_N, \pm 45, 90_N)$ laminates.

TABLE 4

UNIDIRECTIONAL LAMINA PROPERTIES AT 60 PERCENT FIBER VOLUME

	2525/AS	3501-5/AS	3501-6/AS
Elastic constants			
E_{11}, psi x 10^6	19.3	19.20	19.75
E_{22}, psi x 10^6	1.39	1.35	1.4
μ_{12}	0.28	0.28	0.28
G_{12}, psi x 10^6	0.65	0.65	0.65
Thermal coefficients			
α_{11}, in./in./^{o}F x 10^{-6}	-0.2	-0.2	-0.2
α_{22}, in./in./^{o}F x 10^{-6}	13.0	13.0	13.0
Limit status			
ϵ_{11_t}, %	1.21	+1.17	1.14
ϵ_{11_c}, %	--	-0.70	-0.70
ϵ_{22_T}, %	0.93	0.62	0.63
ϵ_{22_c}, %	--	2.36	2.36
γ_{12}, %	--	1.0	1.0

C. COMPONENT DESIGN

1. Outer Cylinder/Trunnion

The outer cylinder/trunnion is the main load-carrying structure of the landing gear. The piston slides along the inner diameter on two bearings (upper and lower) which transmit loads into the outer cylinder. The torque arm and side brace attachments are bonded to the outer cylinder, and loads are also transmitted into or reacted at the outer cylinder at these points. The trunnion is used to attach the landing gear to the aircraft wing.

The cylindrical portion of the outer cylinder/trunnion was a natural component for composite materials and was relatively easy to design. However, the trunnion portion of the design was quite different because it is a three-dimensionally (3-D) loaded structure. Composites have excellent one-dimensional (1-D) properties, fair two-dimensional (2-D) properties, but poor properties in the third direction (transverse properties). Consequently, the designer must maximize the use of the 1-D and 2-D properties by selecting the proper structural geometries. However, it is very difficult to eliminate conditions where interlaminar shear is a limiting factor in the design.

Three different concepts were considered in the initial design evaluation. The selected concept, referred to as the first design, (trunnion has elliptical cross section) is shown in Figure 6. The alternate designs, referred to as the proposal design and the side plate design, are shown in Figures 7 and 8, respectively.

The proposal design was essentially a bonded assemblage of 2-D composite subcomponents. The major problem with the design was the geometry, which places the bonds between various subcomponents into an undesirable cleavage type of stress state.

The side plate design eliminates the cleavage type of stress state but has a major stress problem in the high tensile lap shear stresses developed at the side plate-to-outer cylinder juncture. Shear stresses of 8000 psi were predicted for this bond joint, indicating that a primary bond is necessary. Therefore, the trunnion and outer cylinder would have to be co-cured, creating an undesirable manufacturing condition (very complex tooling).

The selected elliptical design (Figure 6) maximizes the use of the excellent 2-D properties available with composites, since the configuration approximates a body of revolution. Since this first design provides an integral structure, it eliminates both the cleavage stress state (proposal design) and the bond problem (side plate design).

The loads resulting from the joint to the aircraft were the second major outer cylinder/trunnion design problem. The contract

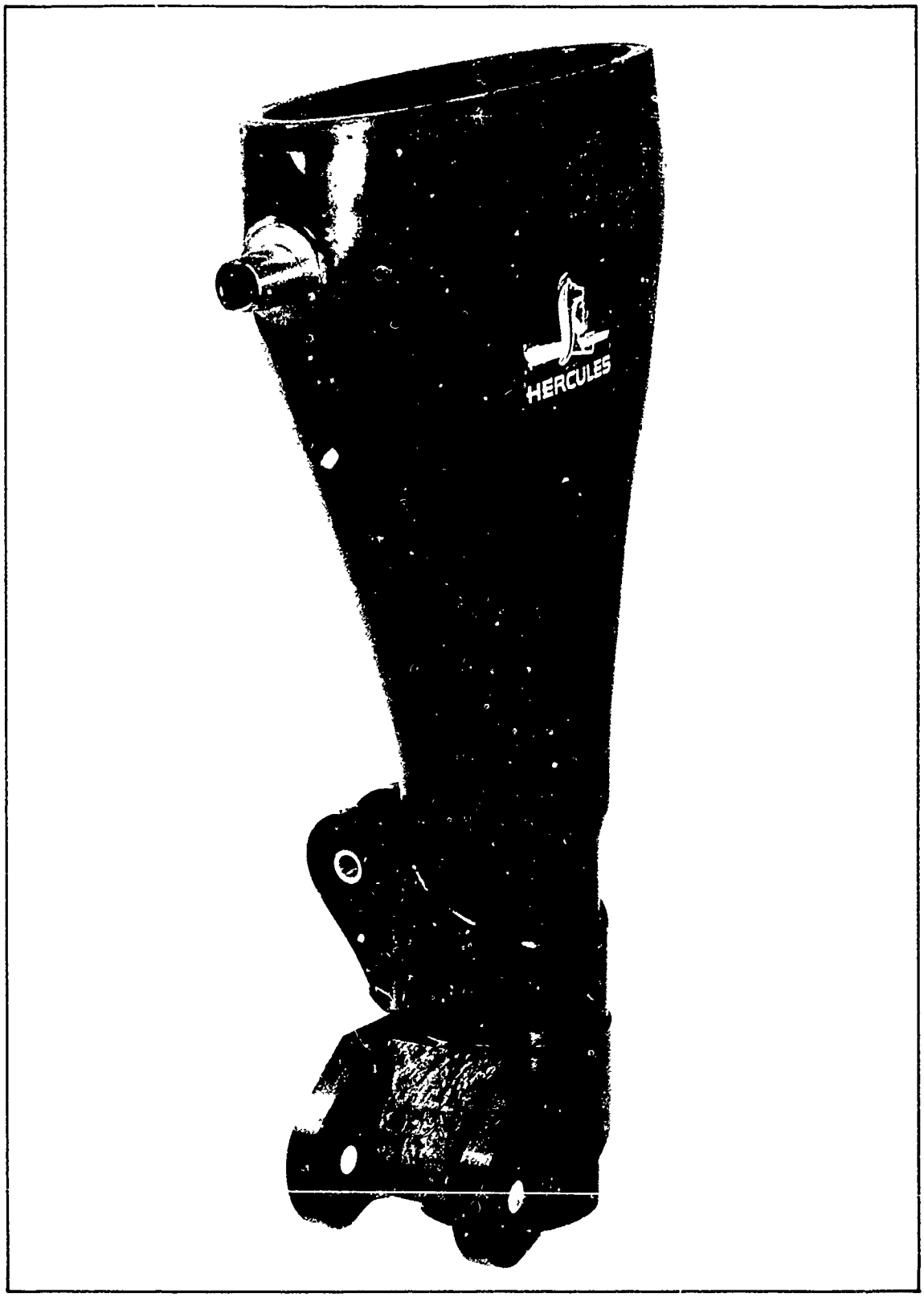

Figure 6. First Design of A37B Graphite Composite Outer Cylinder/Trunnion

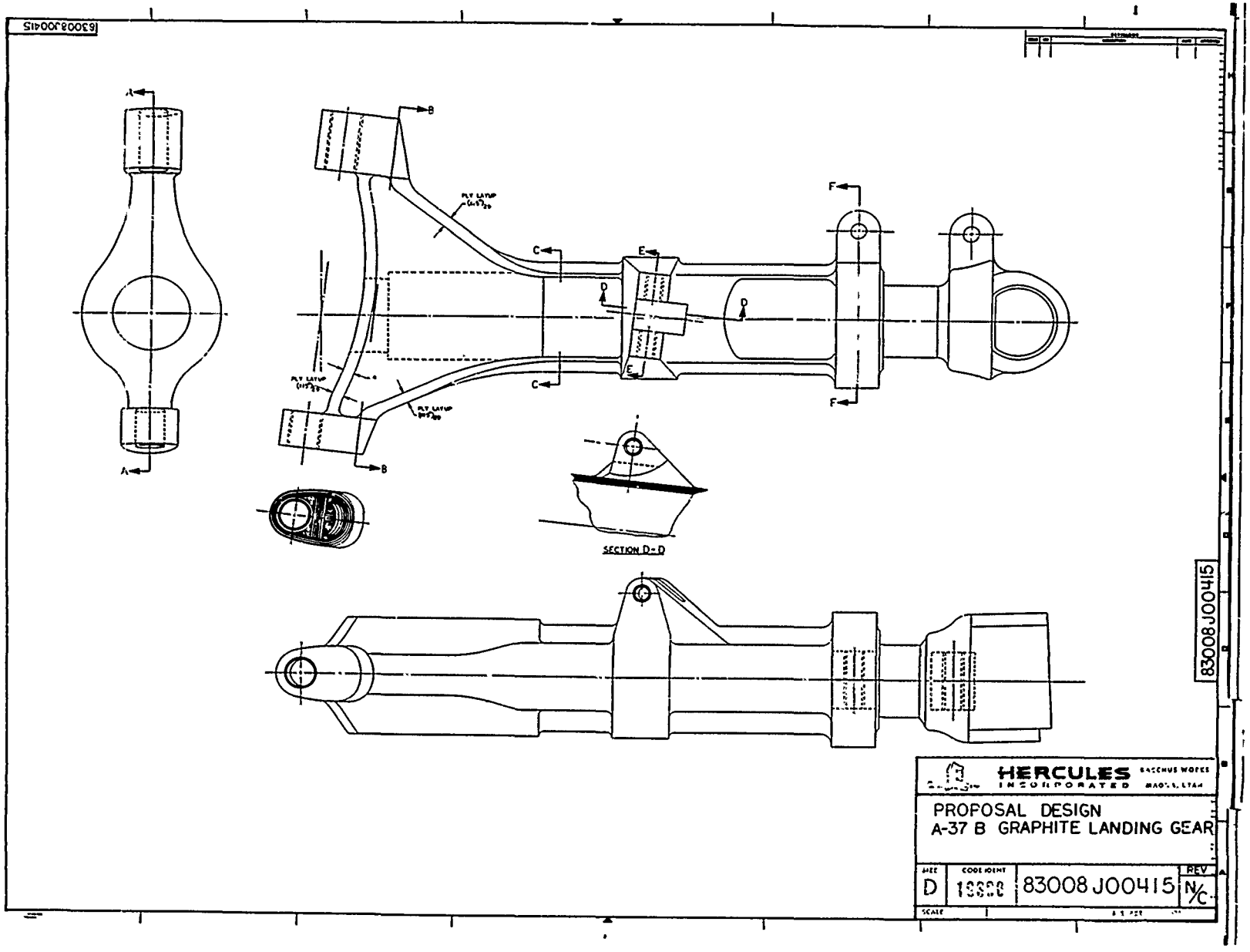

Figure 7. Alternate Proposal Design for A37B Graphite Composite Outer Cylinder/Trunnion

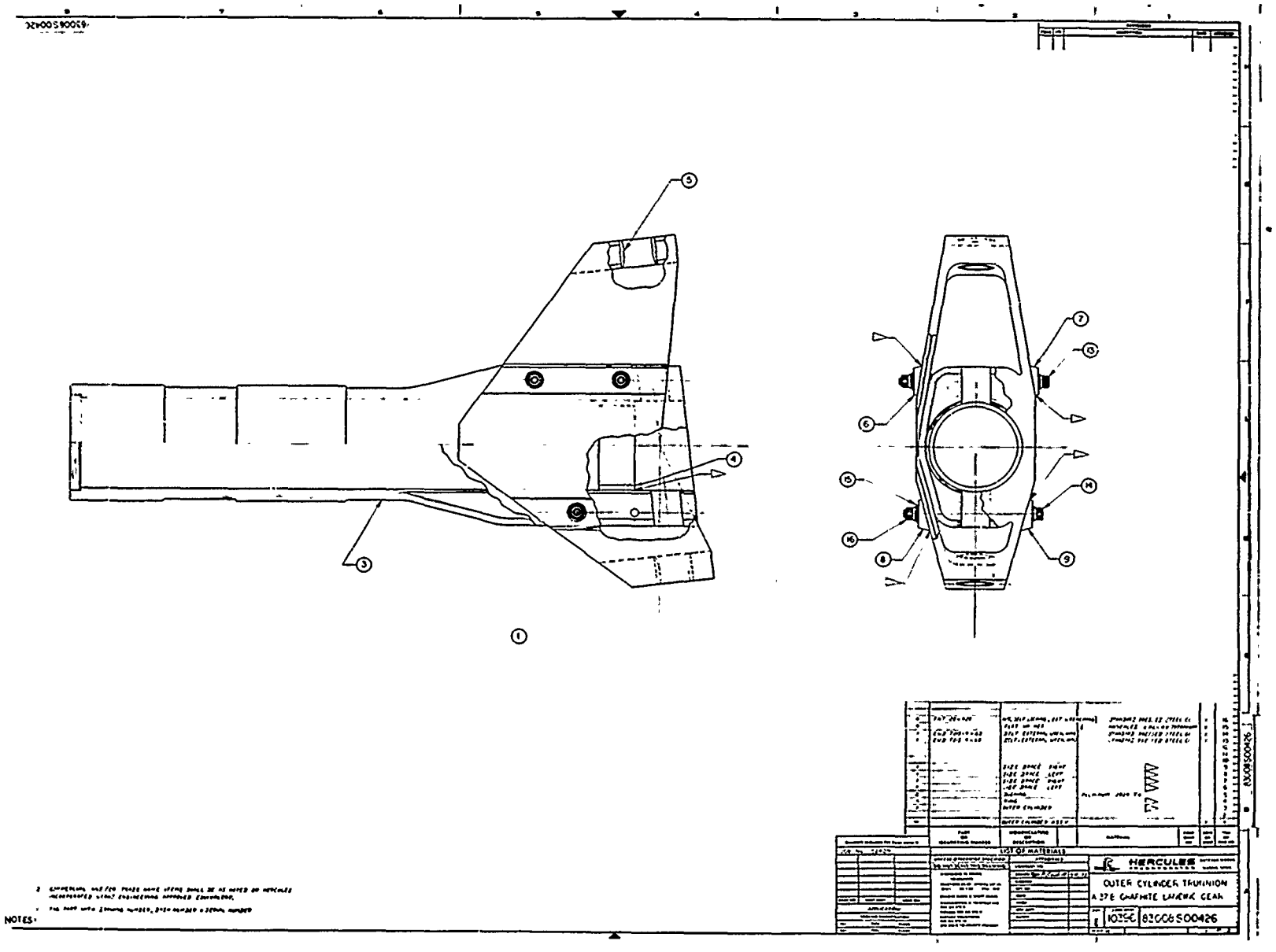

Figure 8. Alternate Side Plate Design for A-37B Graphite Composite Outer Cylinder/Trunnion

required geometric compatibility with the A37B aircraft. Unfortunately, the original aircraft/gear joint was designed so that the trunnion provided a rigid joint for the attachment pin. In other words, a pinned connection at the aircraft was assumed. This results in a large bending moment being transferred to the landing gear trunnion attachment area. Preliminary design analyses indicated that the moments would make a composite trunnion design very difficult, if not impossible. Therefore, the moments were removed by connecting the two attachment pins by means of a thin steel tube. The inner surfaces of the trunnion bushings were also slightly rounded to reduce the possibility of loading the edges and failing the graphite composite in local bearing.

The weight savings estimated for the three initially considered designs are tabulated below.

Outer Cylinder/Trunnion

Design	Weight (lb)	Saved (%)
Production	19.07	--
First Design (Elliptical)	11.45	37.2
Proposal	12.08	36.5
Side Plate	12.60	33.9

The elliptical design minimum margin of safety is 0.0. The unit was optimumly designed to a zero margin of safety, thereby providing the minimum weight structure. The design is conservative and was proven adequate by load tests.

As mentioned previously, the objective of the first design was to demonstrate design and fabrication approaches. It was not intended to be retractable.

The first design was fabricated using Hercules 2525/AS prepreg. This material was selected because of improved transverse strain capability over prepreg 3501-5/AS.

After the first graphite composite gear had successfully passed all load tests while mounted in the A37B test wing, an effort was directed to fabricating a graphite composite gear assembly that could be retracted. This intermediate design was quite similar to the original approach. The trunnion cross section was changed from ellipsoid to oval, and the wall thickness was reduced slightly. A wooden mockup of the proposed intermediate design was fabricated and taken to Cessna for trial fit.

Fitting trials disclosed that nonstructural changes would be required on the aircraft for gear retraction. The changes included relocating the outboard landing gear door latch, the shuttle valve, and the gear-up warning light switch block.

There were two other major areas of the proposed composite design envelope that needed additional modification.

In the first, the trunnion envelope was further reduced to clear rivet heads at the forward retraction axis forging. In the second area, the torque arm attachment lugs were found to interfere with the "U" forging in the wing. Reduction of the composite lug projection would have left insufficient material to carry torque arm loads. It was decided that a suitable steel torque arm attachment could be bonded onto the lower outer cylinder for load and retraction tests.

The second design outer cylinder/trunnion was fabricated from 3501-5/AS prepreg because the 2525 system had become a nonstandard prepreg. This version is shown in Figures 9 and 10. (Note the flat sides of the trunnion area where material was removed.)

After successful retraction tests, this second composite gear failed prematurely during load testing. Inspection of the components disclosed a severe wrinkle in the outer cylinder in the outer cylinder/trunnion transition area.

A modified version of the outer cylinder/trunnion second design was fabricated from 3501-5/AS prepreg and machined. The modification consisted of a more gradual transition from the outer cylinder to the trunnion. (See Figure 11.) In addition, improvements in the fabrication process produced an outer cylinder/trunnion assembly of excellent quality.

A review of the test data after failure of the modified second design during 150 percent load testing (springback mode) indicated that failure was probably due to interlaminar shear under machined plies at the neck of the trunnion. (Material had been machined away to meet envelope requirement.)

A third (final) design, a refinement of the modified second design, was performed using 3501-6/AS prepreg.

The final design (Figures 12 and 13) had additional material added to the outer cylinder/trunnion area, and the side brace attachment location was lowered. This latter design demonstrated a weight savings of 21 percent over the production gear. Although this design does not have a retraction capability, test data show it to be capable of withstanding the load tests. Figure 2 is a front view of this design.

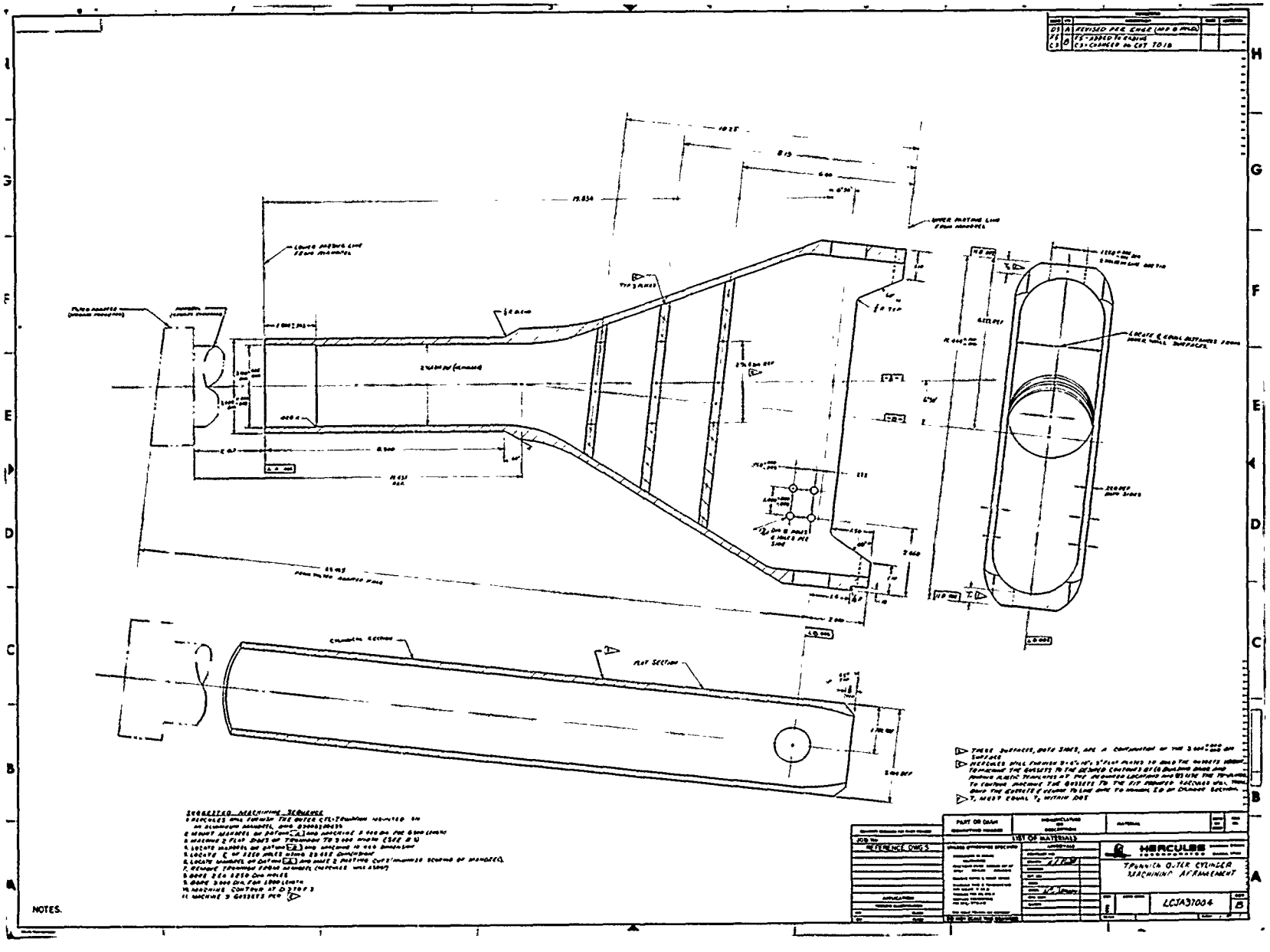

Figure 9. Design 2, A37B Graphite Composite Outer Cylinder/Trunnion

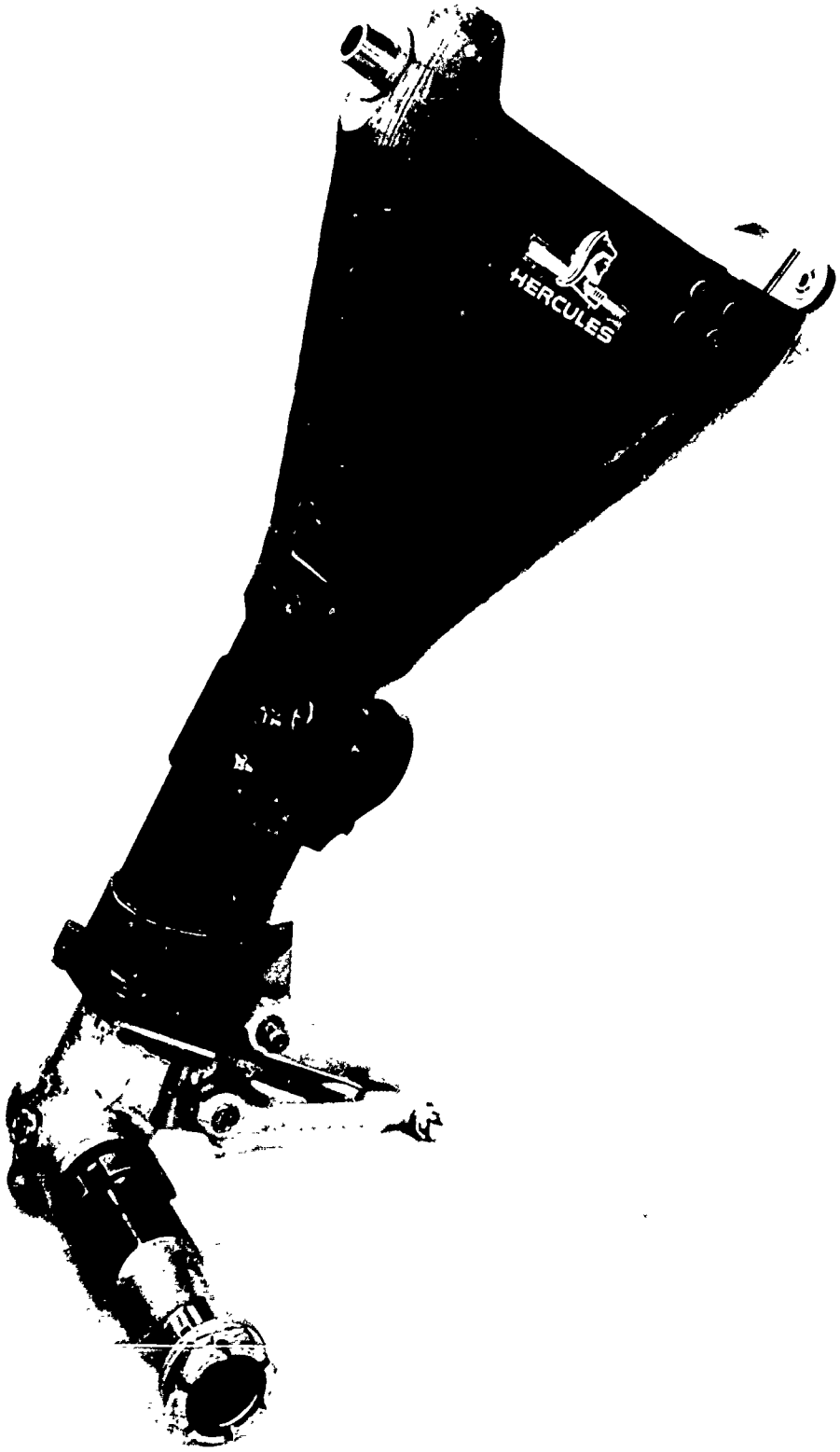

Figure 10. Design 2, A37B Graphite Composite Landing Gear

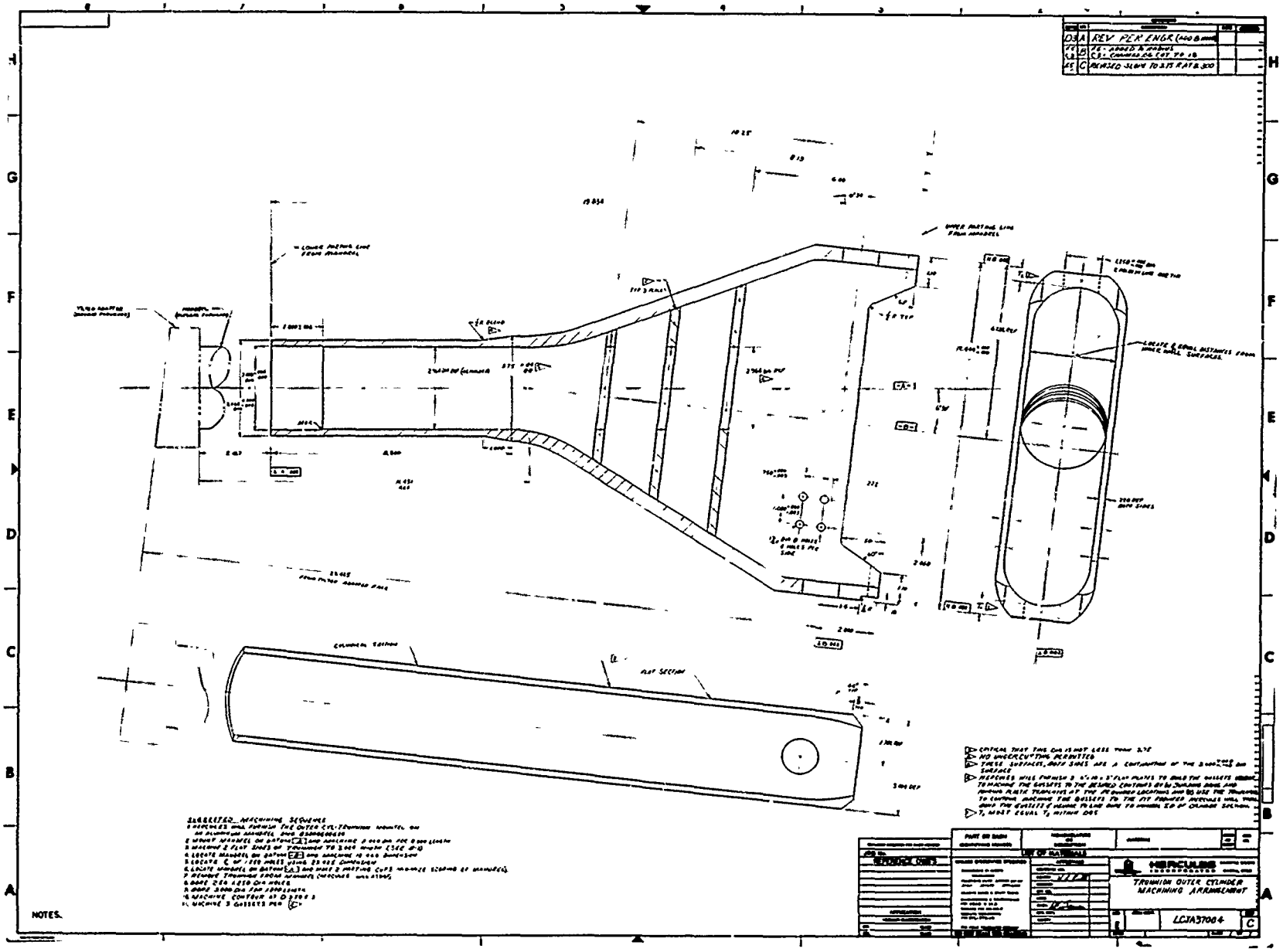

Figure 11. Modified Second Design of A37B Graphite Composite Outer Cylinder/Trunnion

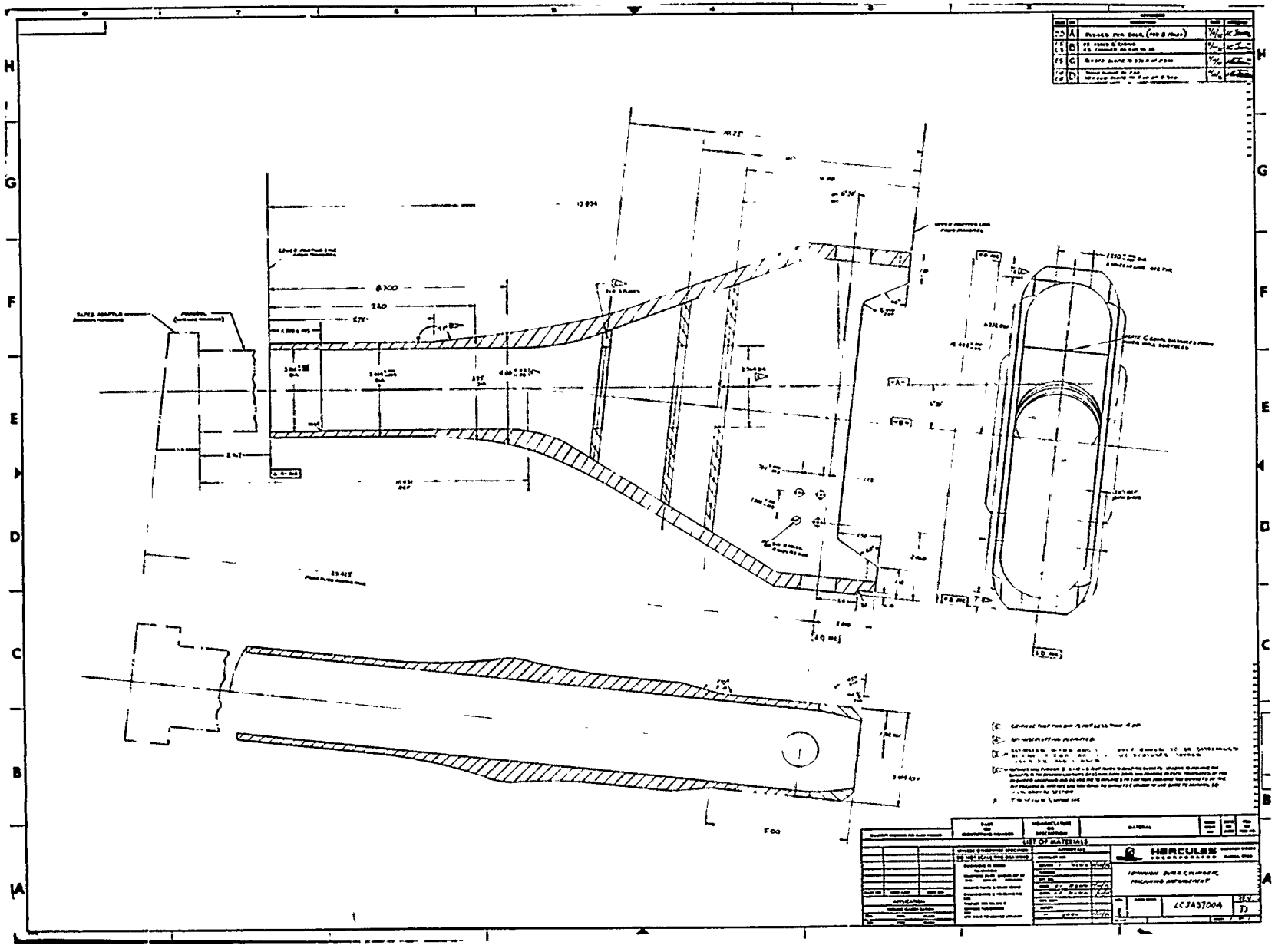

Figure 12. Third Design of A37B Graphite Composite Outer Cylinder/Trunnion

Figure 13. Side View of Third Design A37B Graphite Composite Outer Cylinder/Trunnion

A summary of the cross section properties in the failure area of the outer cylinder/trunnion transition area for all three designs is shown in Table 5.

The shear stress in the area that failed is due to torque and bending simultaneously. The torque is produced by the fact that the center of load is through the tire and the axle represents the lever arm. The bending is produced by the trunnion and cylinder acting as a cantilevered beam with a shear load acting at the tip. The simple strength-of-materials equation of stress is

$$\tau = \frac{TR}{J} + \frac{VQ}{Ib} = F \quad \frac{\ell R}{J} + \frac{1.4380}{Ib}$$

Where:

$T = \ell F$

F = Ultimate load of 9,560 lb

ℓ = Axle length of 7.5 in.

$V = k'F$

k = Established from equilibrium to be 1.438

b = 2 times the minimum juncture thickness

I = Moment of inertia about an axis through the minimum thickness

$= \int y^2 dA \qquad y = R$

$Q = \int_0 y dA$ where X is the axis through the minimum thickness

J = Polar moment of inertia $= \int (x^2 + y^2)\, dA$

R = Outside (max) radius at the juncture

Note: x also is the flexure axis

The full axle length was used as the lever arm for the torque calculation. This is a conservative approach which yields a slightly thicker design.

The major thrust of the design analysis was to examine those cross sections believed to be critical to the functional success of the structure. Among the major sections inspected are those depicted in Figure 14. Loads on the landing gear assembly are tabulated in Table 6 and are the maximum loads imposed from the various load conditions. By using the maximum loads, a more conservative design was obtained, and the maximum loads induce various loadings into the gear assembly which are tabulated in Table 7. Although structures were made with three resin

TABLE 5

SECTION PROPERTIES OF OUTER CYLINDER/TRUNNION TRANSITION AREA

	Inside Radius	Outside Radius	Radius To Flat	Thickness	Area	I	J	Q	L	τ
1st Design	1.665	2.115	---	0.45	5.344	9.68	19.359	3.23	0.900	12,935
2nd Design	1.482	1.875	1.702	0.393	3.412	5.87	10.642	2.17	0.440	23,011
3rd Design	1.482	2.000	---	0.518	5.666	8.803	17.606	3.171	1.036	12,923

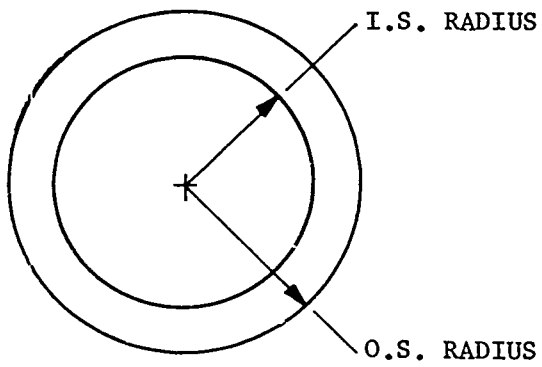

DESIGNS 1 AND 3

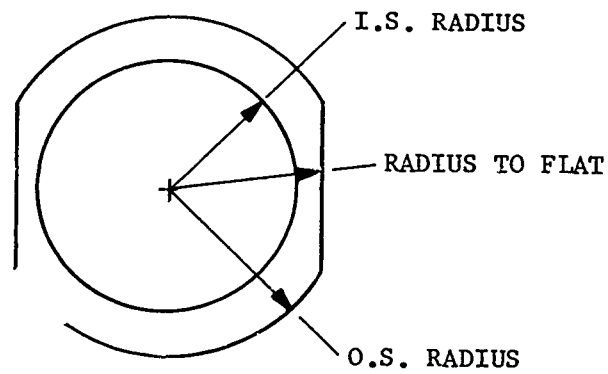

DESIGN 2

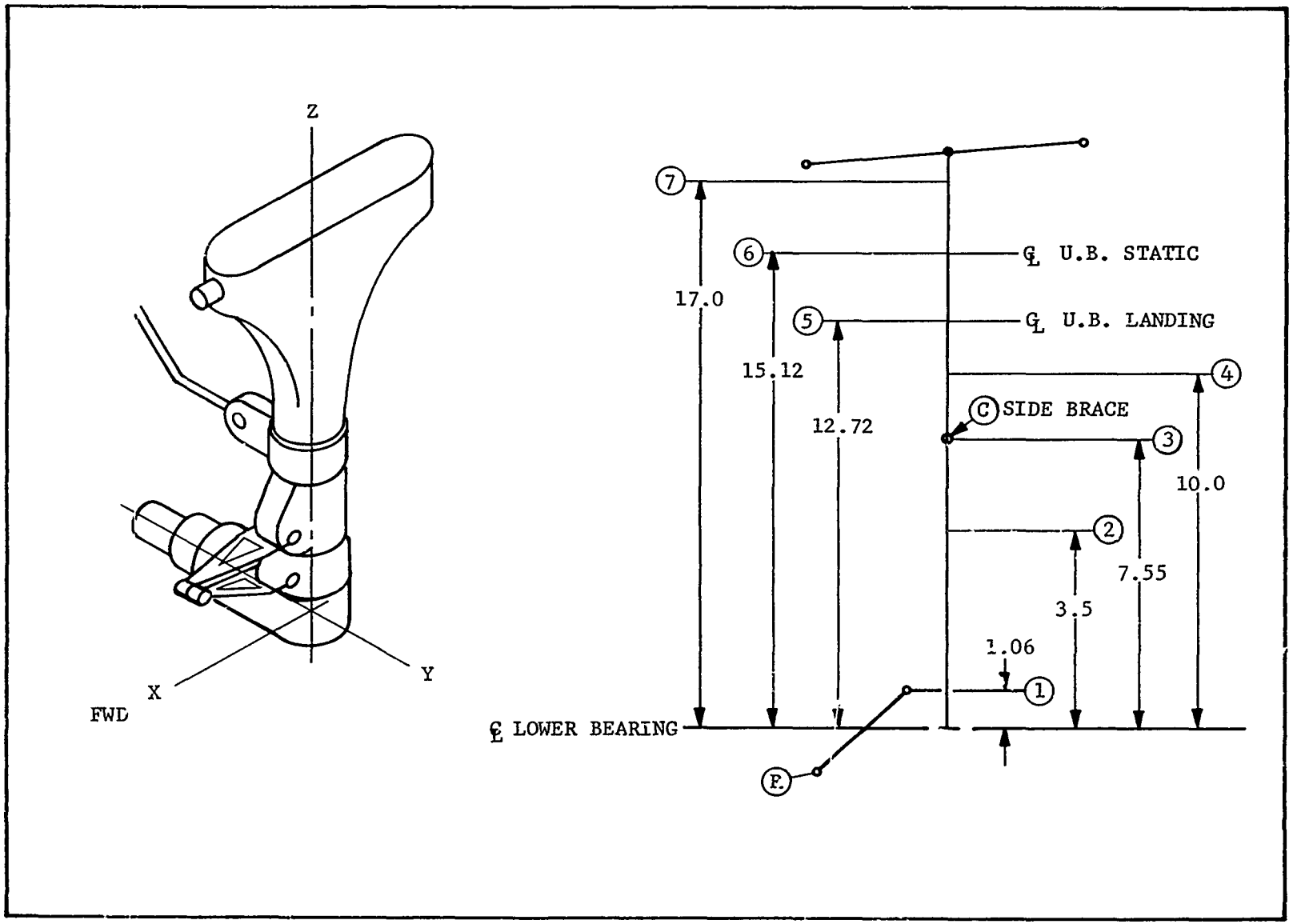

Figure 14. Major Sections Analyzed

TABLE 6

ULTIMATE LOADING CONDITIONS (LB)

X_{LB}	Y_{LB}	Y_K	X_C	Z_C	Y_C	X_{UB}	Y_{VB}
-17,900	-21,000	9,700	2,600	22,700	18,800	8,300	13,300

TABLE 7

GEAR ASSEMBLY LOADS

Cross Section Location	Ultimate Loads (lb)							
	F_a	M_x	M_y	M_{rcs}	V_x	V_y	V_{res}	τ
1	0	22,000	16,000	27,200	17,900	10,400	20,700	78,000
2	0	9,000	62,000	62,700	17,900	10,400	20,700	78,000
3	-8,900	51,000	135,000	144,000	17,900	10,400	20,700	78,000
4	-8,900	31,000	176,000	178,500	17,200	3,170	17,500	76,000
5	-8,900	39,000	223,000	226,500	17,200	7,230	18,650	76,000
6	-8,900	22,000	264,000	265,000	17,200	7,230	18,650	76,000
7	-8,900	9,000	281,000	281,000	9,800	7,230	12,150	76,000

systems (2525, 3501-5, and 3501-6), only 3501-6/AS properties are used in the design analysis of this report. Properties of all three are nearly identical, except that the 2525 system may have a slightly higher strain capability. Actual layup schedules for the various components are presented in Table 8. Laminate properties for the orientations used in the landing gear structures are presented in Table 9.

2. Side Brace Attachment

Critical side brace attachment loads resulted from load conditions 3A, 3B, and 6A of Table 3. The 6A condition imposed a critical compressive load of 29,300 pounds into the lugs. Strength-of-material techniques and interaction diagrams, based on a $(0_3/\pm 45)$ layup for the strap and a (0/-45/90) laminate for the lugs, formed the basis of the design. The calculated minimum margin of safety was -0.017 in the smallest cross section of the strap. However, load testing verified that the design was adequate.

Aluminum bushing are provided to help transfer the bearing load into the lugs. In addition, the lugs are drawn together by titanium bolts with a spacer between them. A molded spacer of chopped 3501-5/AS prepreg was used in the initial design. However, it was replaced in the later assemblies by a machined aluminum spacer with a weight penalty of approximately 0.08 pounds. This was done to reduce costs. The side brace attachment is shown in Figures 15 and 16.

3. Torque Arm Attachment

Critical torque arm attachment loads resulted from load conditions 2C and 5A of Table 3. Condition 2C imposed a critical compressive and tensile load of 13,960 pounds into the lugs. Layups for the strap $(0_3/\pm 45)$ and lugs (0/-45/90) are identical to those used in the side brace attachment. A shear block molded from chopped prepreg is bonded between the attachment lugs to the outer cylinder to assist in transmitting the torque loads. The minimum margin of safety for this conservative design was calculated to be +1.415 in the strap-to-cylinder bond area.

The design also includes aluminum bushings and titanium clamping bolts which assist in carrying the torque arm loads while preventing the lugs from spreading and initiating an adhesive failure. This design (Figures 17, 18, and 19) was verified by successful load testing.

TABLE 8

DESIGN LAYUP SCHEDULE OF COMPONENT CROSS SECTIONS

	First Design	Second Design	Third Design
Outer cylinder	$(0_{32.78}/\pm45_{13.5}/90_{10.93})$	$(0_{26}/\pm45_{14}/90_{7})$	$(0_{26}/\pm45_{14}/90_{7})$
Outer cylinder/ trunnion transition	$(0_{30.59}/\pm45_{11.5}/90_{10.93})$	$(0_{26}/\pm45_{14}/90_{7})$	$(0_{41}/\pm45_{24.5}/90_{11})$
Reinforced trunnion shoulders	$(0_{32.78}/\pm45_{36.5}/90_{10.93})$	$(0_{26}/\pm45_{14}/90_{7})$	$(0_{26}/\pm45_{44}/90_{11})$
Mid-span of trunnion	$(0_{32.78}/\pm45_{26}/90_{10.93})$	$(0_{26}/\pm45_{37}/90_{7})$	$(0_{26}/\pm45_{37}/90_{7})$
Inner sleeve	$(0_{26.22}/\pm45_{14})$	$(0_{12}/\pm45_{6})$	$(0_{12}/\pm45_{6})$
Side brace attachment: lug	$(0_{6}/\pm45_{12}/90_{12})_{3}$	$(0_{12}/-45_{12}/90_{12})_{3}$	$(0_{12}/-45_{12}/90_{12})_{3}$
Side brace attachment: strap	$(0_{6}/\pm45_{2})_{3}$	$(0_{6}/\pm45_{2})_{3}$	$(0_{6}/\pm45_{2})_{3}$
Torque arm attachment: lug	$(0_{12}/-45_{12}/90_{12})_{3}$	Steel	Steel
Torque arm attachment: strap	$(0_{6}/\pm45_{2})_{3}$	Steel	Steel

TABLE 9

ULTIMATE PROPERTIES FOR 3501-6/AS LANDING GEAR LAMINATES

	Outer Cylinder $[0_{26}/\pm45_{14}/90_7]$	Outer Cylinder/ Trunnion Transition $[0_{41}/\pm45_{24.5}/90_{11}]$	Reinforced Trunnion Shoulders $[0_{22}/\pm45_{44}/90_{11}]$	Mid Span of Trunnion $[0_{26}/\pm45_{37}/90_7]$	Inner Sleeve $[0_{12}/\pm45_6]$	Side Brace Attachment Lug $[0_{12}/-45_{12}/90_{12}]_3$	Side Brace Attachment Strap $[0_6/\pm45_2]_3$
Laminate Moduli							
E_x (psi x 10^6)	10.405	9.998	6.626	7.120	11.176	7.968	12.932
E_y (psi x 10^6)	5.188	5.168	4.921	4.581	3.256	7.968	2.980
μ_{xy}	0.432	0.451	0.557	0.593	0.699	0.099	0.665
G_{xy} (psi x 10^6)	2.697	2.835	3.790	3.734	2.880	1.709	2.434
Thermal Coefficients							
α_x (in./in./°F x 10^6)	0.2388	0.2505	0.5190	0.2989	-0.3946	1.5766	-0.4184
α_y (in./in./°F x 10^6)	2.4526	2.3821	1.7170	2.0813	4.5907	1.5766	5.4954
Laminate Strengths							
σ_{xt} (psi x 10^3)	62.43	59.75	39.76	42.72	65.79	47.81	77.67
σ_{yt} (psi x 10^3)	31.13	31.01	29.53	27.49	19.53	47.81	17.88
τ_{xy} (psi x 10^3)	26.97	28.35	37.90	37.34	28.80	16.04	24.34
σ_{xc} (psi x 10^3)	-72.67	-68.62	-42.56	-44.71	-65.79	-72.47	-77.67
σ_{yc} (psi x 10^3)	-42.69	-41.88	-34.81	-33.17	-27.05	-72.47	-25.84
τ_{xy} (psi x 10^3)	-26.97	-28.35	-37.90	-37.34	-28.80	-17.09	-24.34

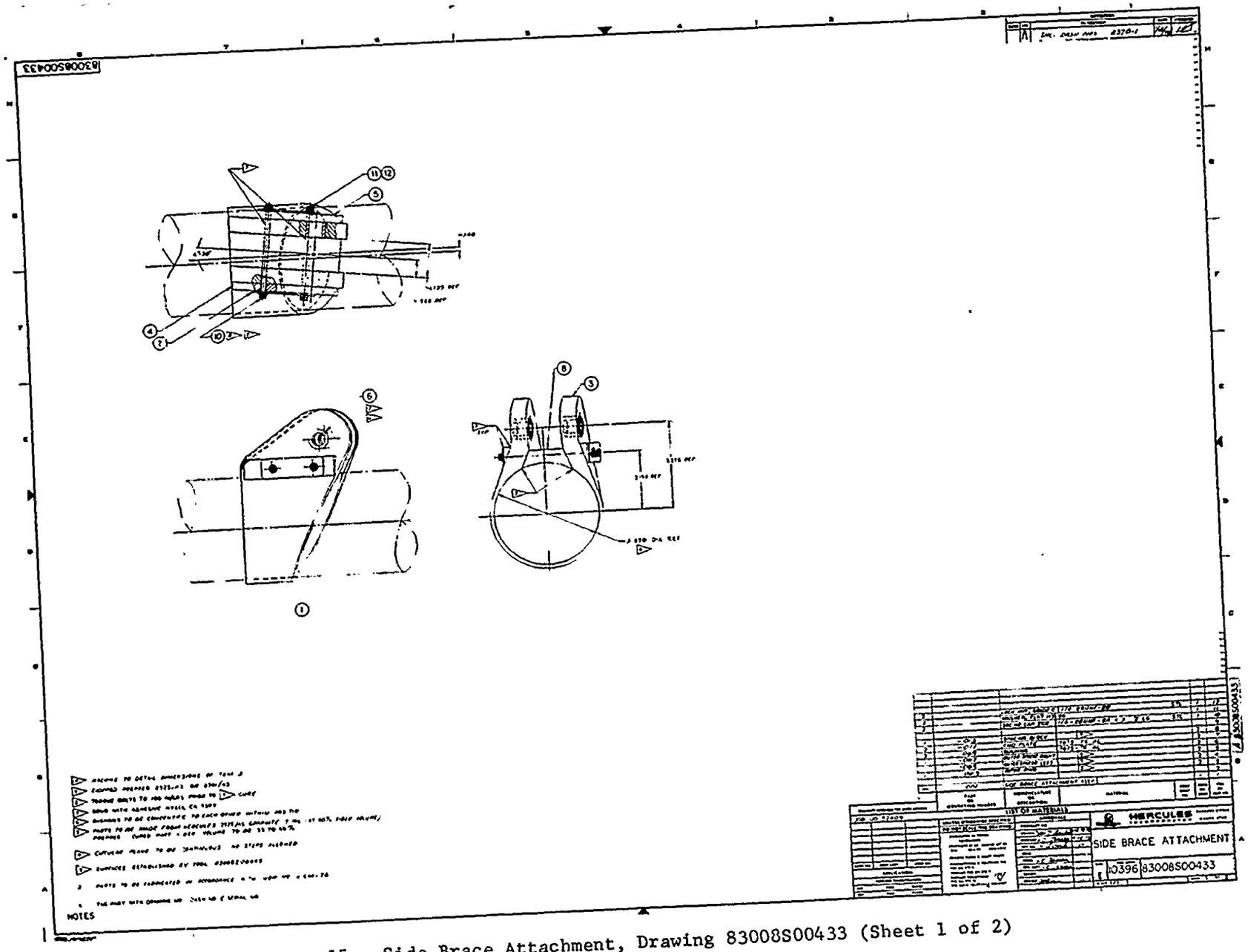

Figure 15. Side Brace Attachment, Drawing 83008S00433 (Sheet 1 of 2)

BEST AVAILABLE COPY

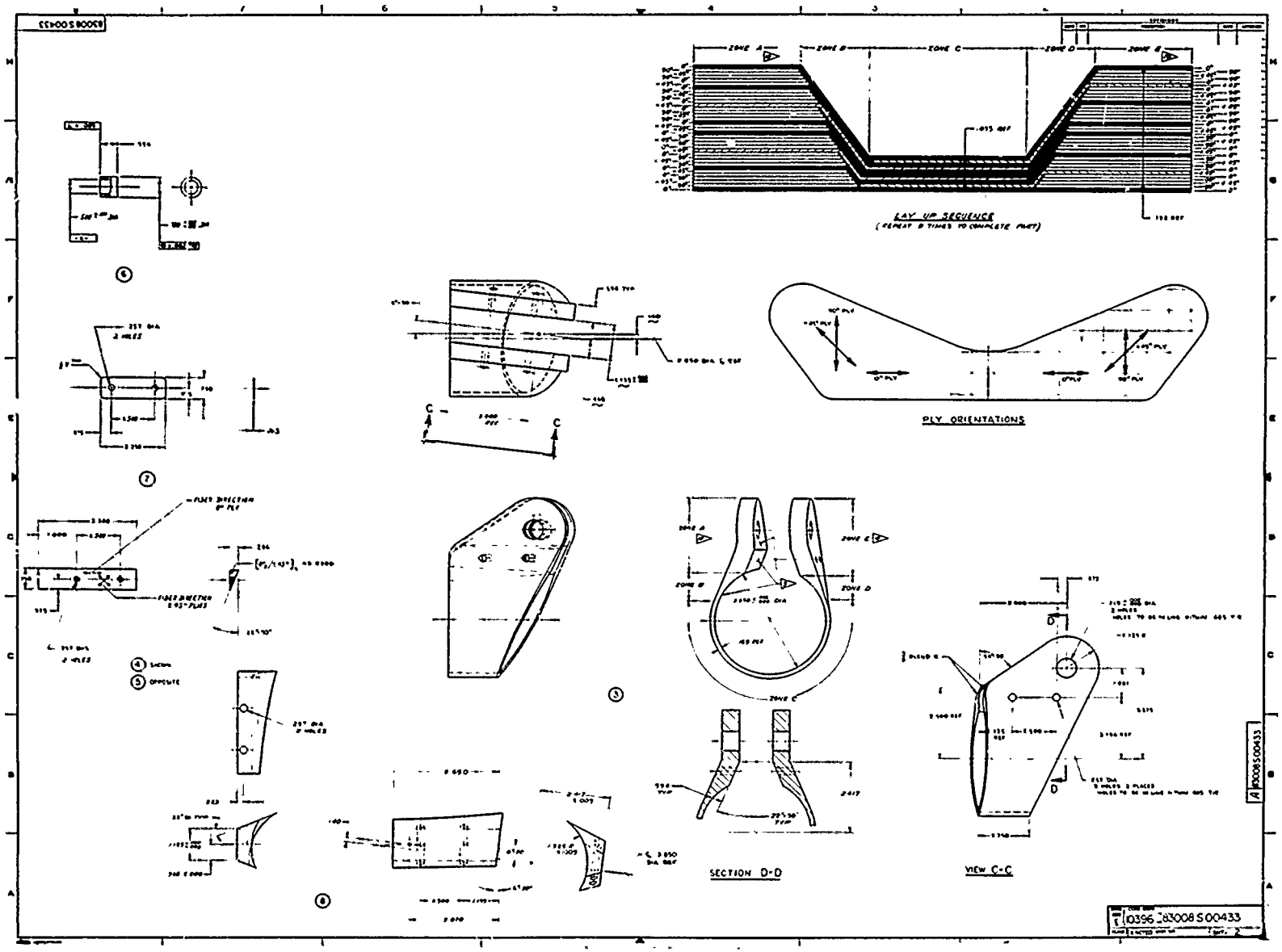

Figure 15. Side Brace Attachment, Drawing 83008S00433 (Sheet 2 of 2)

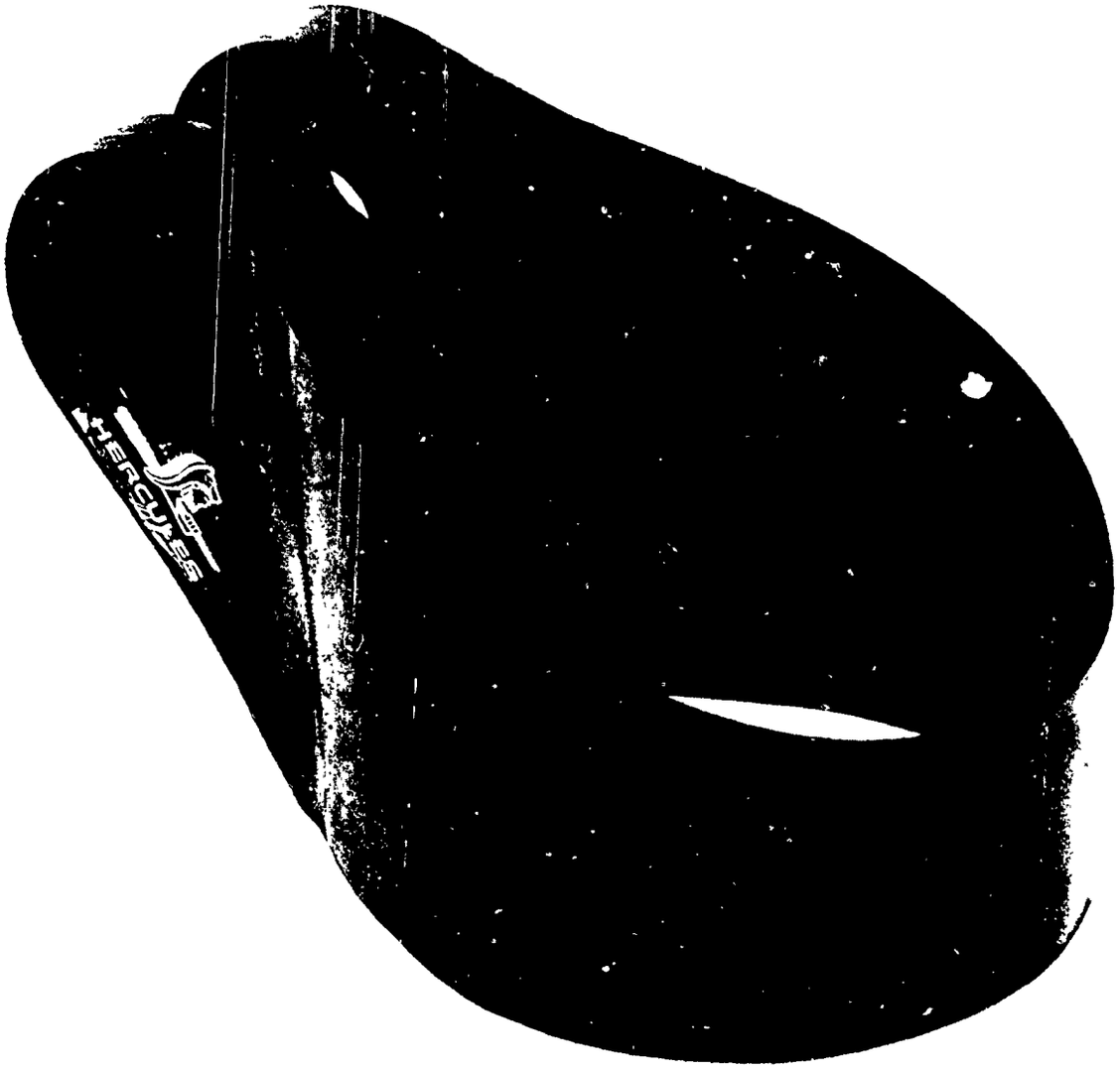

Figure 16. Side Brace Attachment Outer Ring

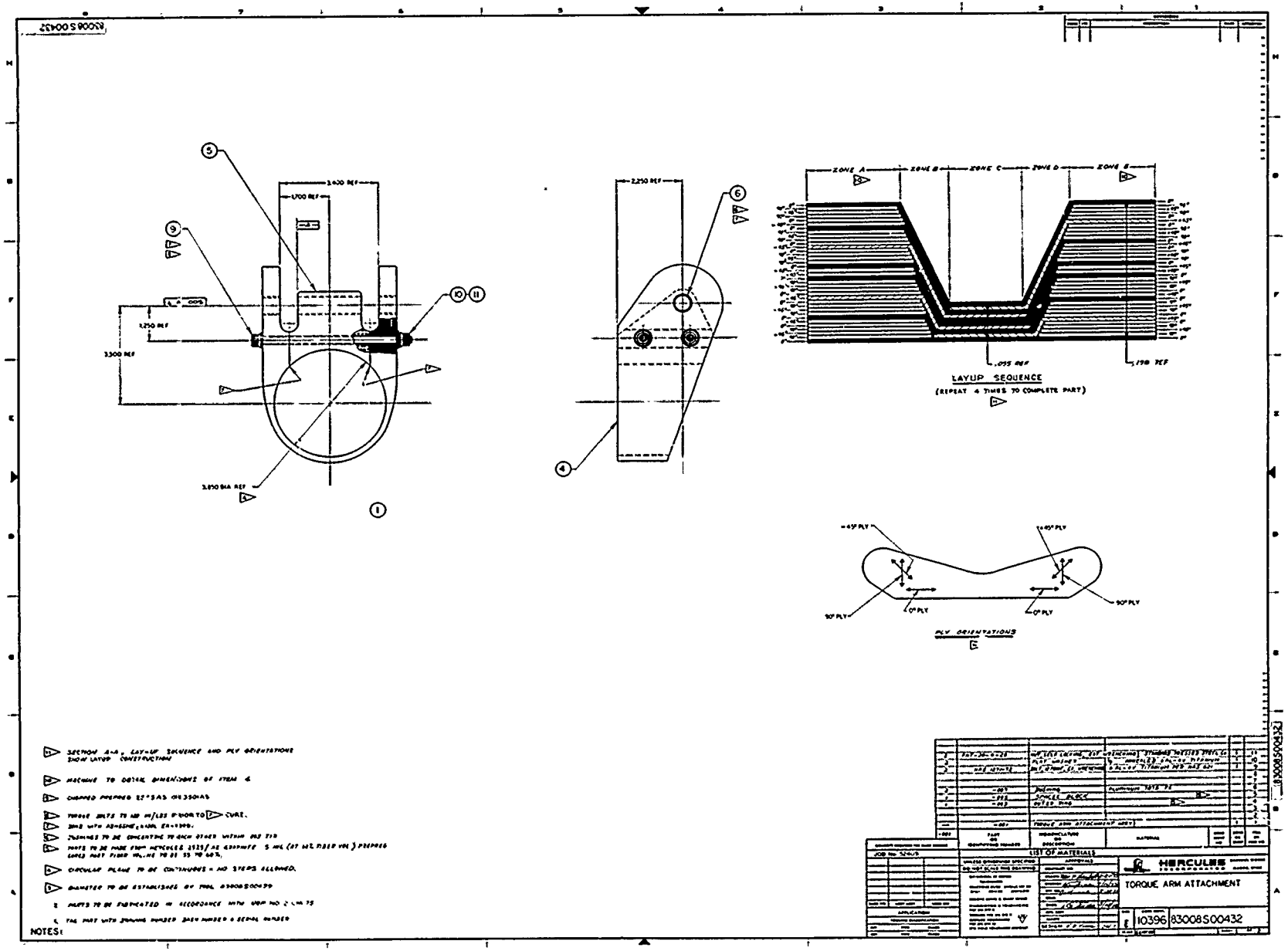

Figure 17. Torque Arm Attachment, Drawing 83008S00432 (Sheet 1 of 2)

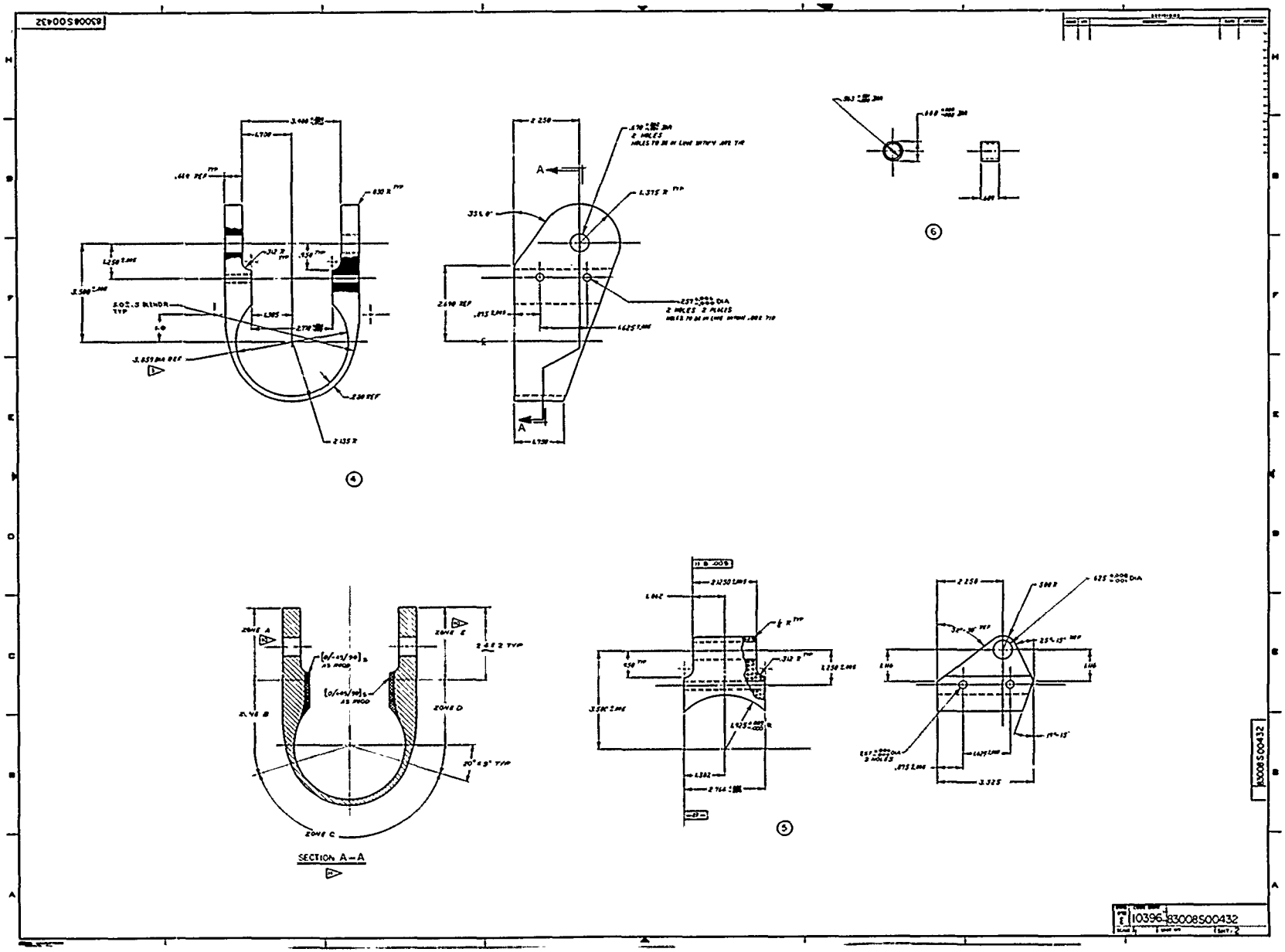

Figure 17. Torque Arm Attachment, Drawing 83008S00432 (Sheet 2 of 2)

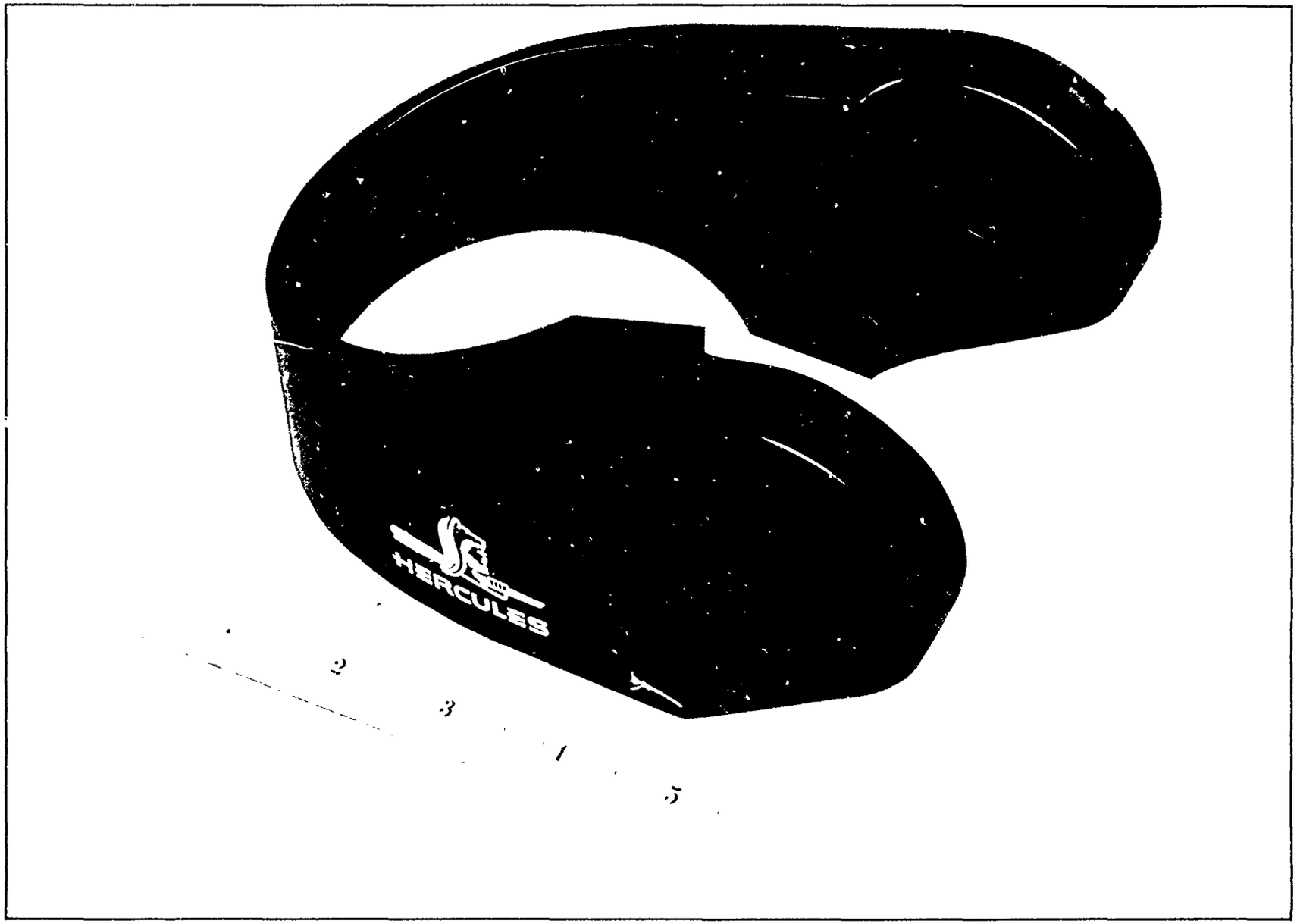

Figure 18. Torque Arm Attachment Outer Ring

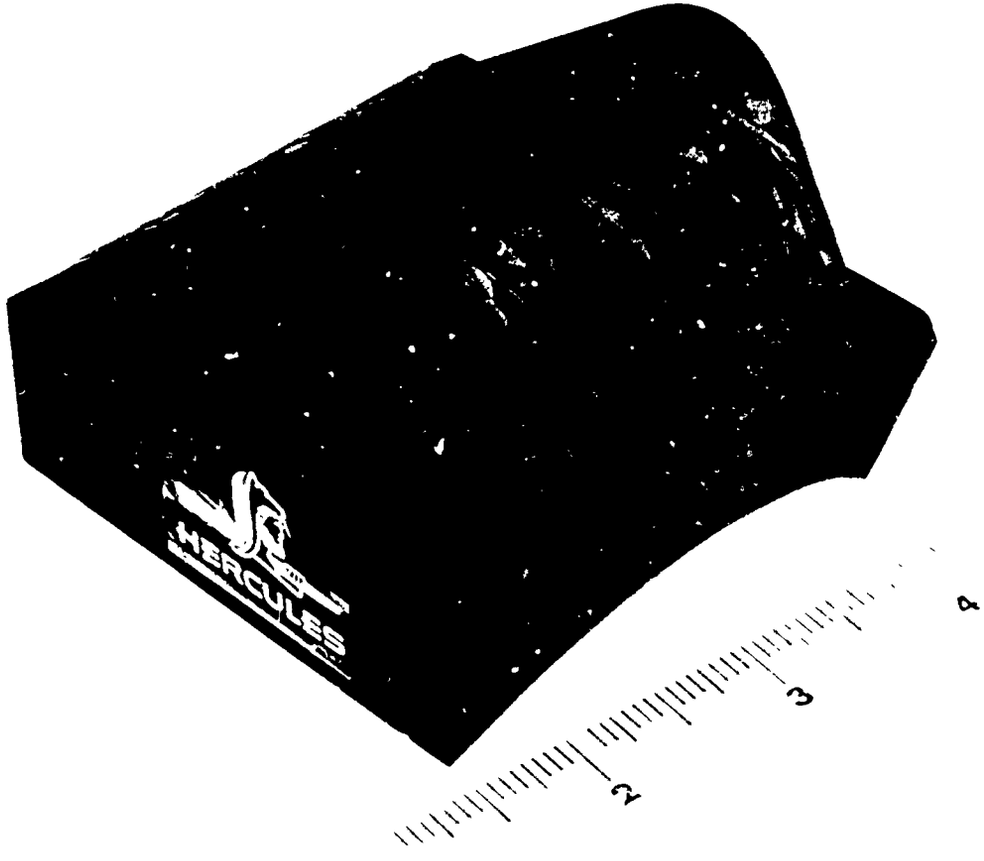

Figure 19. Torque Arm Attachment Spacer Block made from Random Chopped Graphite Composite

4. Inner Sleeve

The production metal inner cylinder consists of the piston, piston/axle joint, and the axle. The contract objective was to maximize the use of graphite/epoxy composite in the piston and piston/axle joint and to use metal for the axle.

The piston p[illegible]on of the inner cylinder was a natural development for advanced comp[illegible]s because of the cylindrical geometry. A graphite/epoxy composit[illegible]ign weighs 3.89 pounds. A $(0^{\circ}_{4}, \pm 45, 90^{\circ})_{S}$ layup was planned with [illegible]0° plies oriented parallel to the piston centerline. The piston has a margin of safety of 0.0. This means it is designed to just meet the required ultimate safety factor of 1.5. To account for uncertainties in property degradation due to fabrication, the ultimate design safety factor on all other components was adjusted to 1.875. However, the landing gear geometry negated this increase for the piston.

The piston provided a tapered outer surface on one end for attachment to the axle and a threaded outer surface on the other end for attachment of the upper bearing. The inner surface provided a step for retention of the metering pin.

The piston/axle joint on the inner cylinder was the most difficult landing gear component to design because of the geometry limitation and the heavy loading. Three different design configurations were considered. For purposes of presentation, the designs are referred to as the proposal design, alternate design 1, and alternate design 2. One of the contract objectives was that the graphite/epoxy composite must provide a significant weight savings. The following tabulation compares the weight savings associated with each of the three designs considered:

Design	Weight (lb)	Weight Increase/Decrease (%)
Original metal design	11.28	--
Proposal design	10.5	-7.0
Alternate design 1	11.77	+4.3
Alternate design 2	15.62	+38.5

The above tabulation shows that no significant weight savings were obtained. The proposal design projects the greatest weight savings (7 percent). However, the geometry places the fiber-to-fiber bonds into an undesirable cleavage type of stress state.

Alternate design 1 had a stress problem at the axle-to-piston juncture. A finite element analysis of the joint area has shown stresses in the piston wall to be near failure allowables.

Alternate design 2 had a stress condition within design allowables. The design, however, had a projected weight increase of 38.5 percent over the original metal landing gear.

It is concluded from the design study that graphite/epoxy composite will not provide a significant weight savings for the inner cylinder piston/axle joint assembly. The geometry limitations do not allow the strength potential of the composite material to be realized.

A graphite composite inner sleeve (Figure 20) was designed and fabricated to accommodate the metal piston and axle joint assembly. This cylinder was fabricated using a (0_2 ± 45) layup. The cylinder was machined after cure. An aluminum head plug was bonded in place with EA 9309 adhesive prior to final bonding into the outer cylinder/trunnion assembly. The initial design used an aluminum retaining sleeve and ring to sustain the lower bearing, while the final design eliminated these two metal parts since the flight piston was used. Figure 21 shows the internal configuration of the landing gear assembly.

Figure 22 presents a drawing tree of the third and final design.

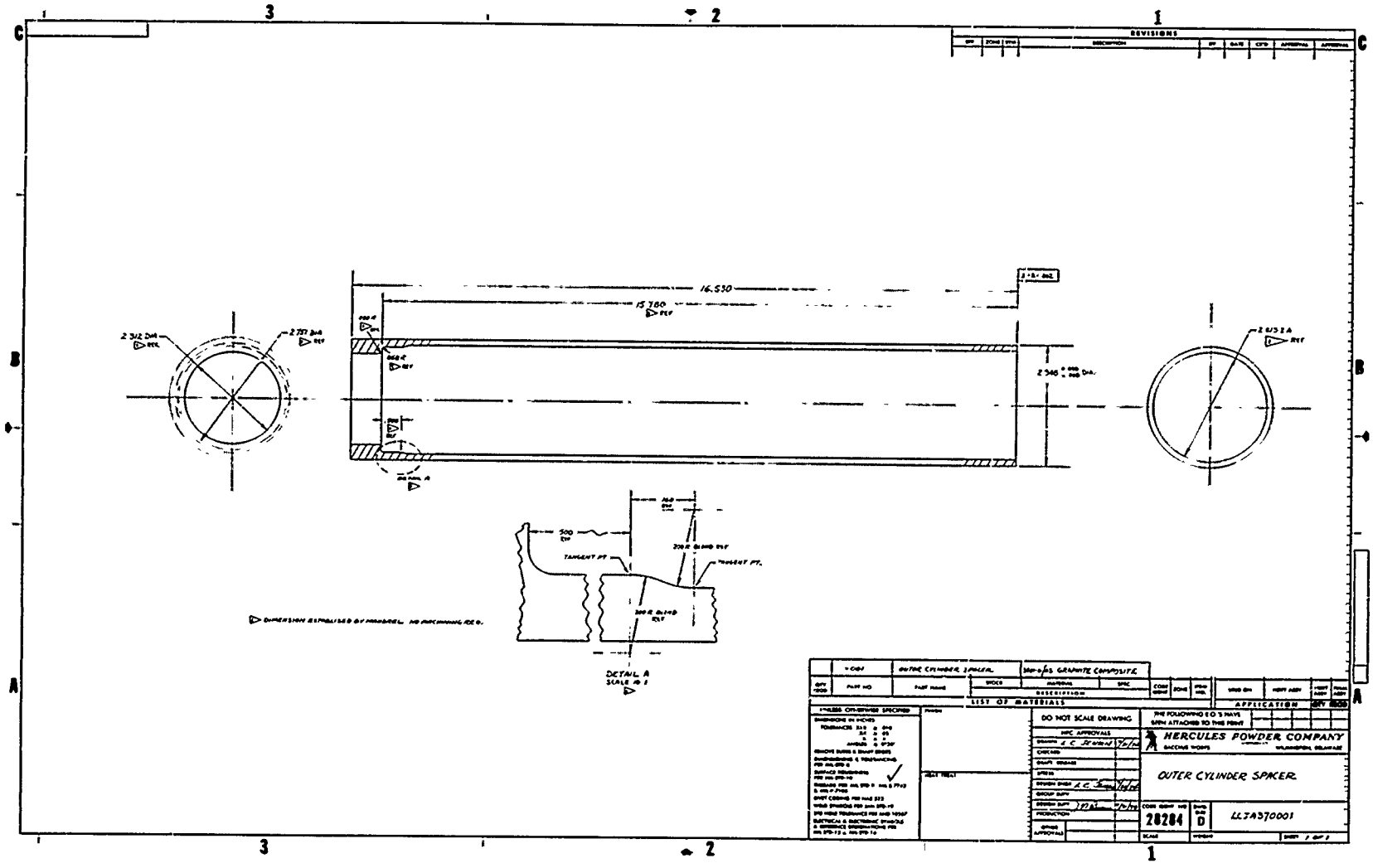

Figure 20. A37B Graphite Composite Inner Sleeve

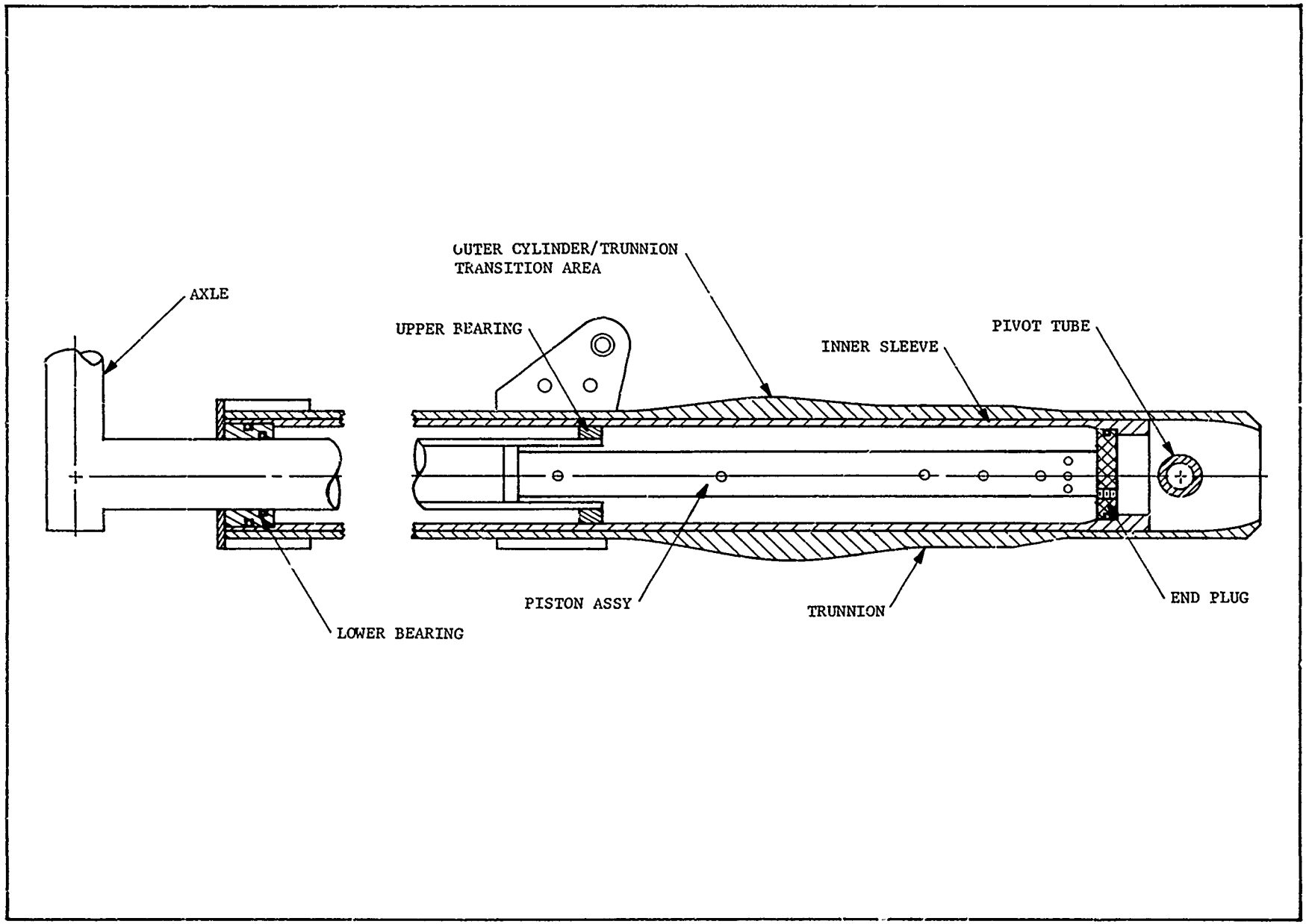

Figure 21. Internal Arrangement For Graphite Composite A37B Landing Gear

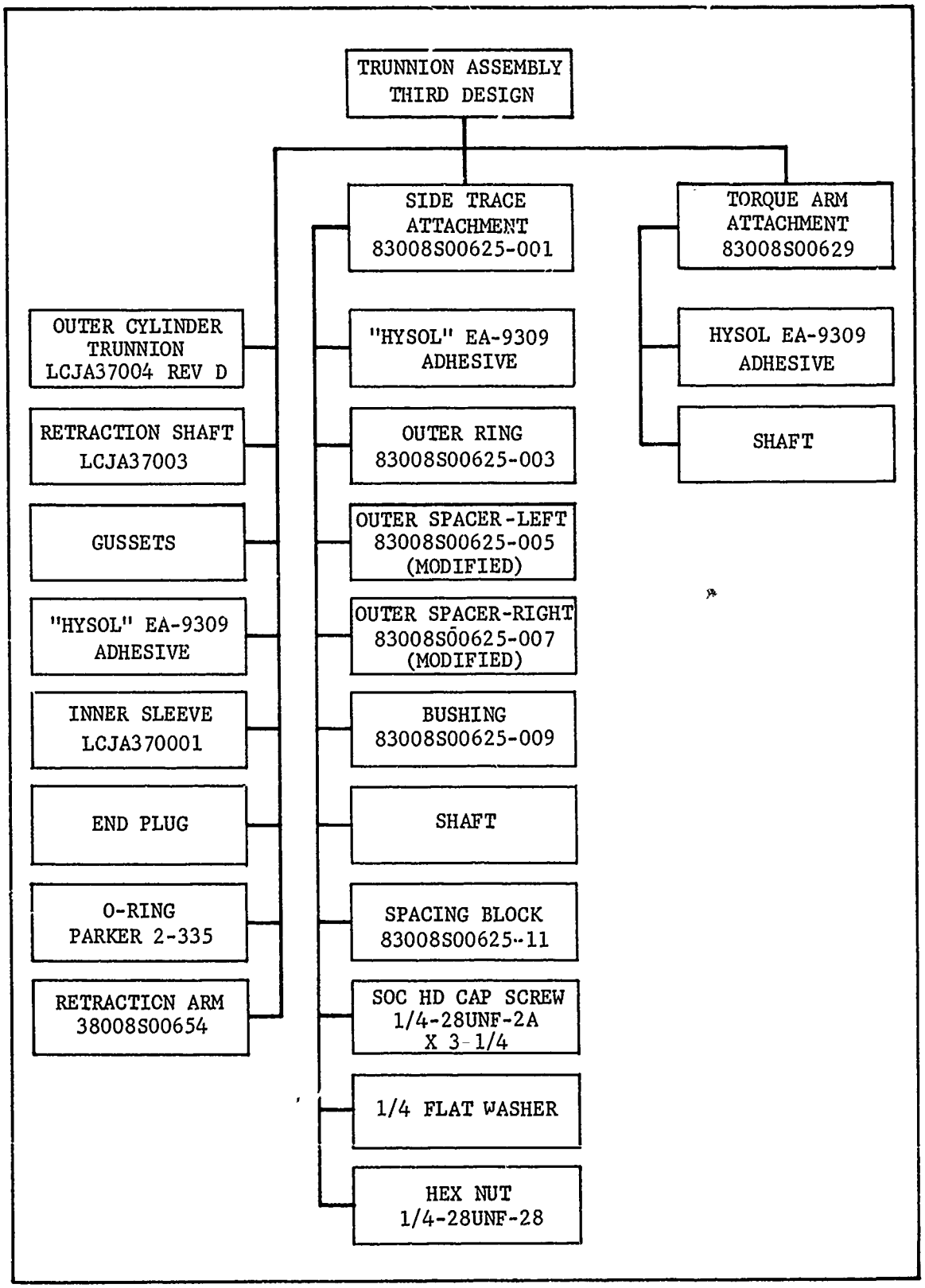

Figure 22. Drawing Tree - Third and Final Design

SECTION III

FABRICATION AND TOOLING

The fabrication technique for the graphite composite landing gear was to make the various components and assemble them into a unit by bonding with EA 9309 adhesive. The major subcomponents are: (1) Outer cylinder/trunnion, (2) torque arm attachment, (3) side brace attachment, (4) inner sleeve, and (5) gussets.

Initial fabrication processes for the various subcomponents were based on previous experience and consisted of a combination of hand layup of prepreg and intermediate compaction/bleed steps. As the program progressed, these procedures were refined to improve part quality.

A. TORQUE ARM ATTACHMENT

The torque arm attachment is shown in Figure 23. During fabrication, preforms were made from cut prepreg patterns and loaded into the layup tool for final cure. An inner ply preform (46 plies of 0° and 90° prepreg plus 11 sets of 0, -45, 90) was shaped in the mold shown in Figure 24. Exterior band sets (0, -45, 90 and 0, +45, 90) were first compacted in the tool shown in Figure 25. These preforms were then reshaped by hand-forming around a warm mandrel (Figure 26). Vacuum bag autoclave at 350° F cure was accomplished with the tooling arrangement shown in Figure 27. The part was then machined to the requirements of Figure 23. The spacer block was machined from a molded billet of chopped prepreg, and did not require any special tooling.

B. SIDE BRACE ATTACHMENT

Figure 28 shows the side brace attachment. Preforms were made from cut prepreg patterns and loaded into the layup tool for final cure. To preclude wrinkling of the outer band plies during cure (due to the 6° 30' requirement), an "acute-corner preform" was placed on the mandrel as illustrated in Figures 29 and 30. The exterior band sets (0, +45, 90 and 0, -45, 90) were preformed flat in the tool shown in Figure 31. These preformed sets were then contoured around a warm mandrel by hand. (See Figure 32.) Final cure was performed with the tooling shown in Figure 33, with a vacuum bag in an autoclave at 350° F. The spacer block was made from a molded billet of chopped prepreg without special tooling. Machining was performed in accordance with the requirements of Figure 28.

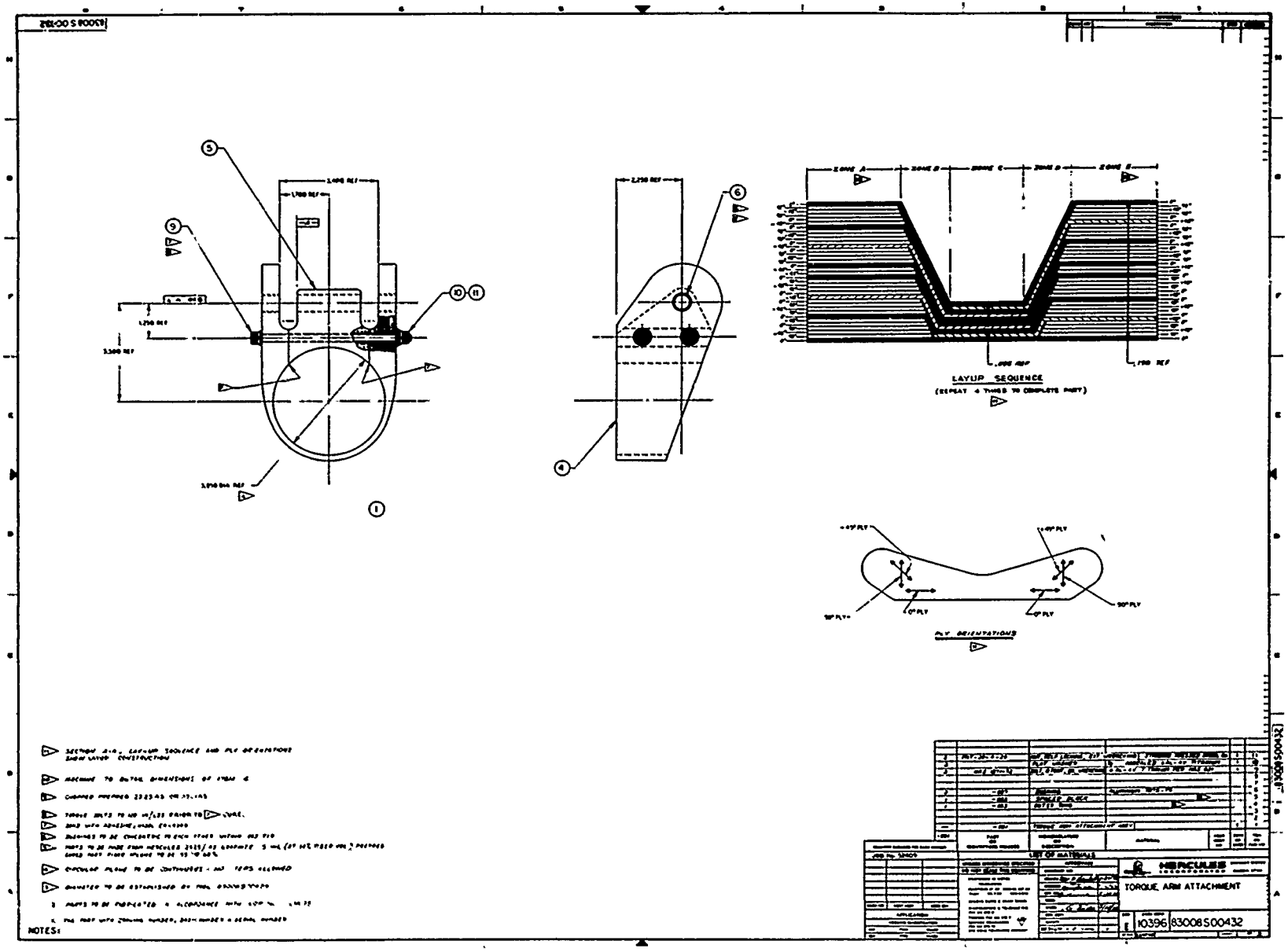

Figure 23. Torque Arm Attachment, Drawing 83008S00432, Sheet 1 of 2

BEST AVAILABLE COPY

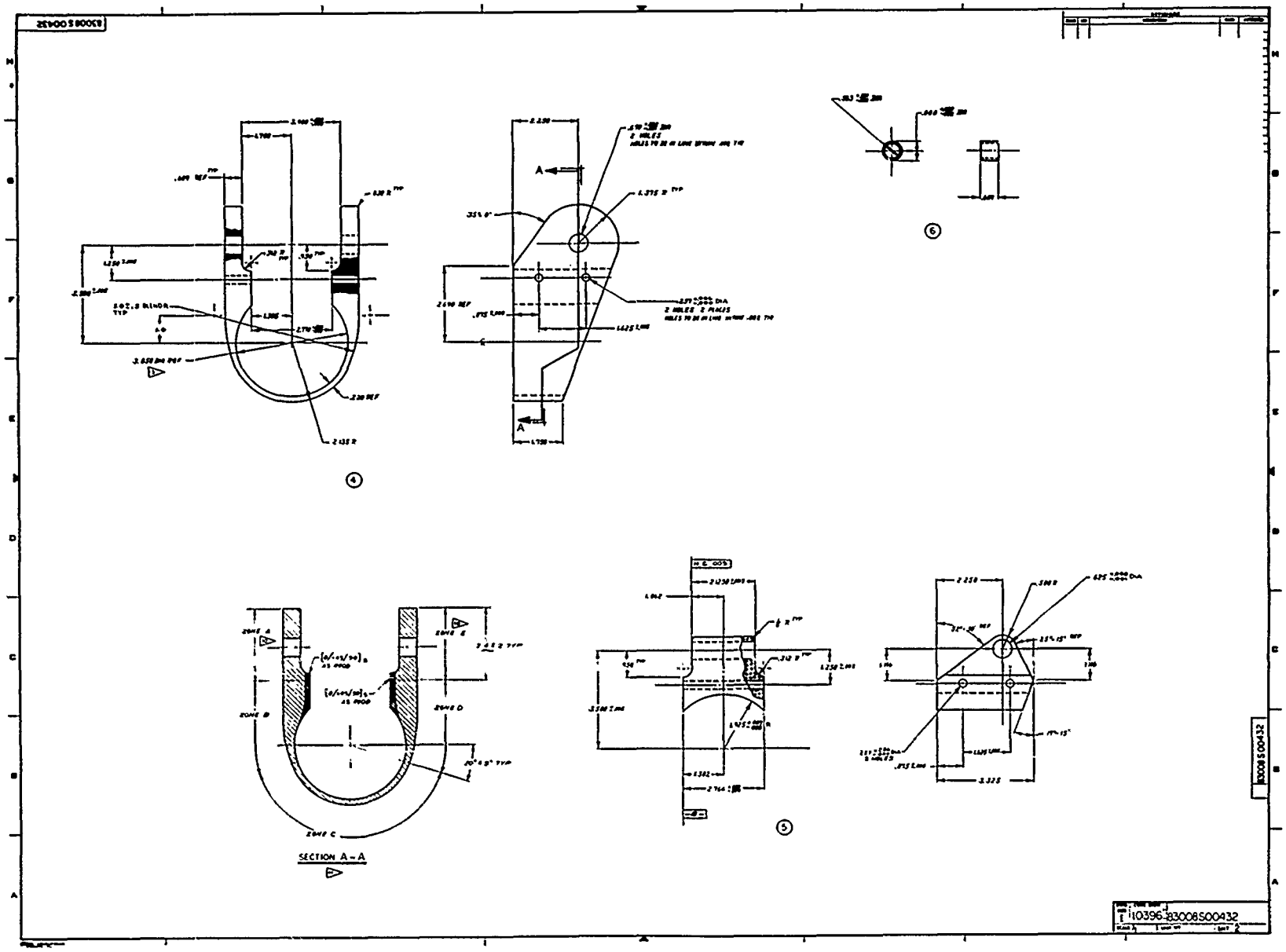

Figure 23. Torque Arm Attachment, Drawing 83008S00432, Sheet 2 of 2

BEST AVAILABLE COPY

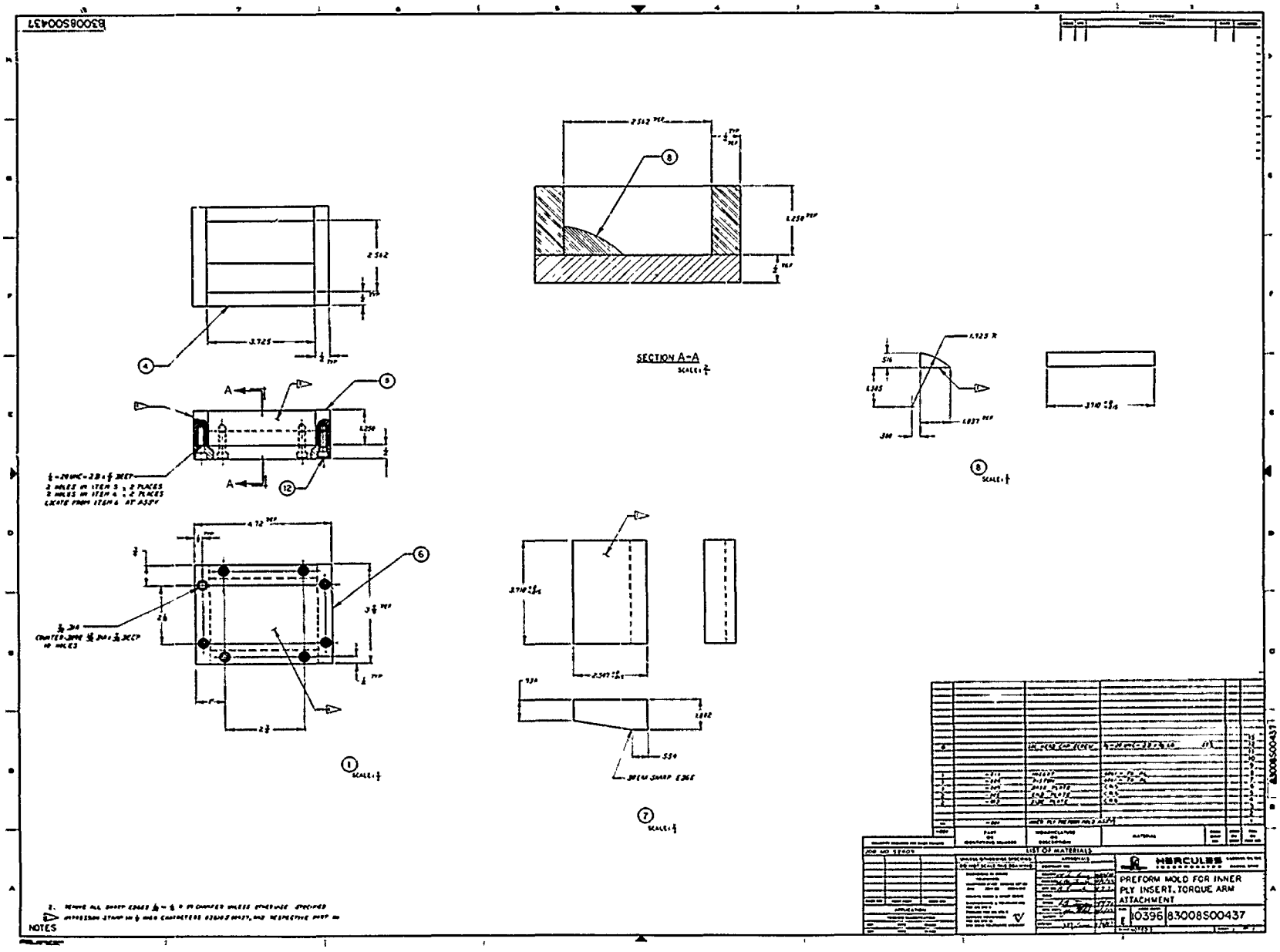

Figure 24. Inner Ply Insert Mold, Drawing 83008S00437

BEST AVAILABLE COPY

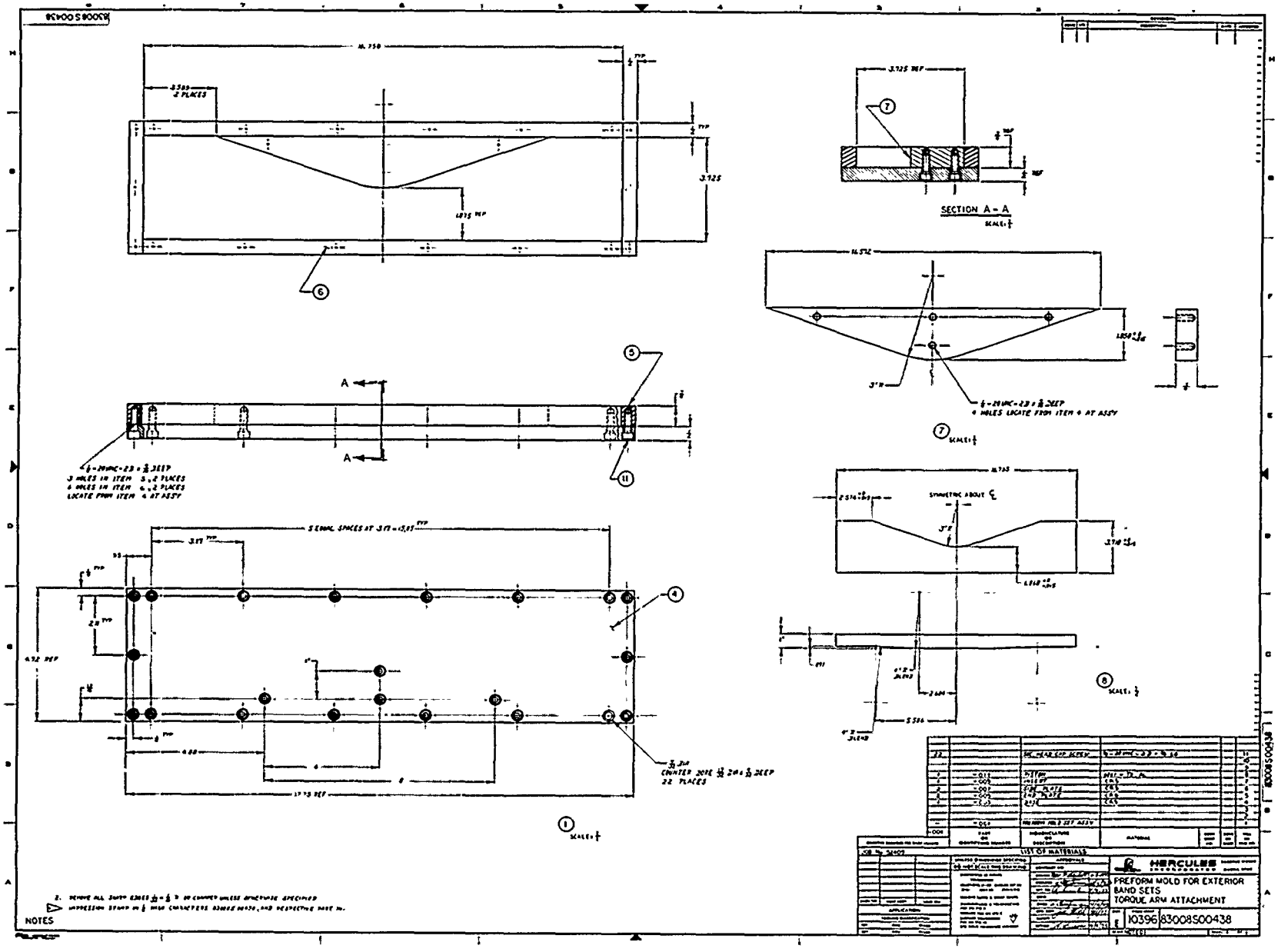

Figure 25. Exterior Band Set Mold, Torque Arm Attachment, Drawing 83008S00438

BEST AVAILABLE COPY

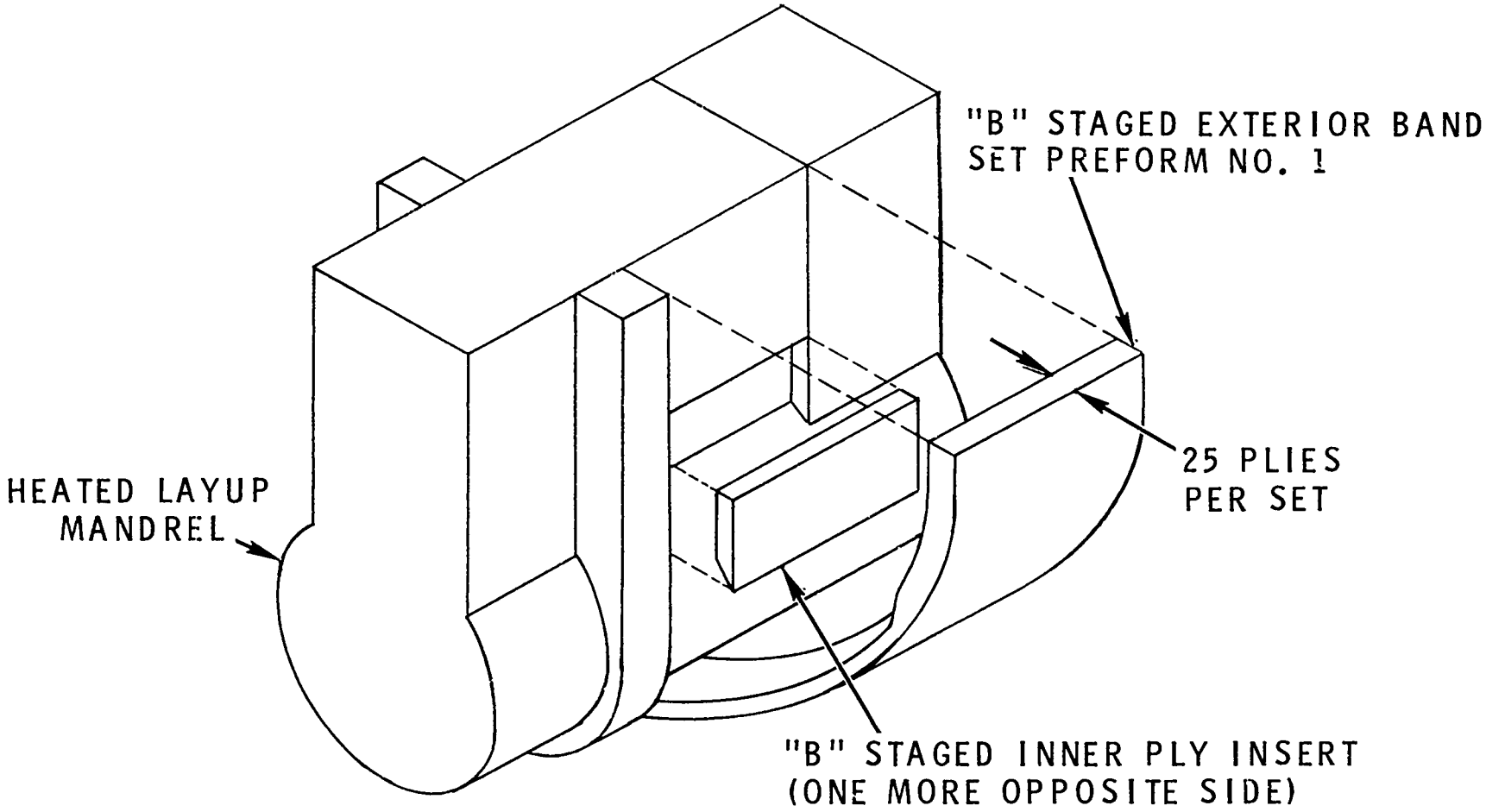

Figure 26. Torque Arm Attachment Preform Layup

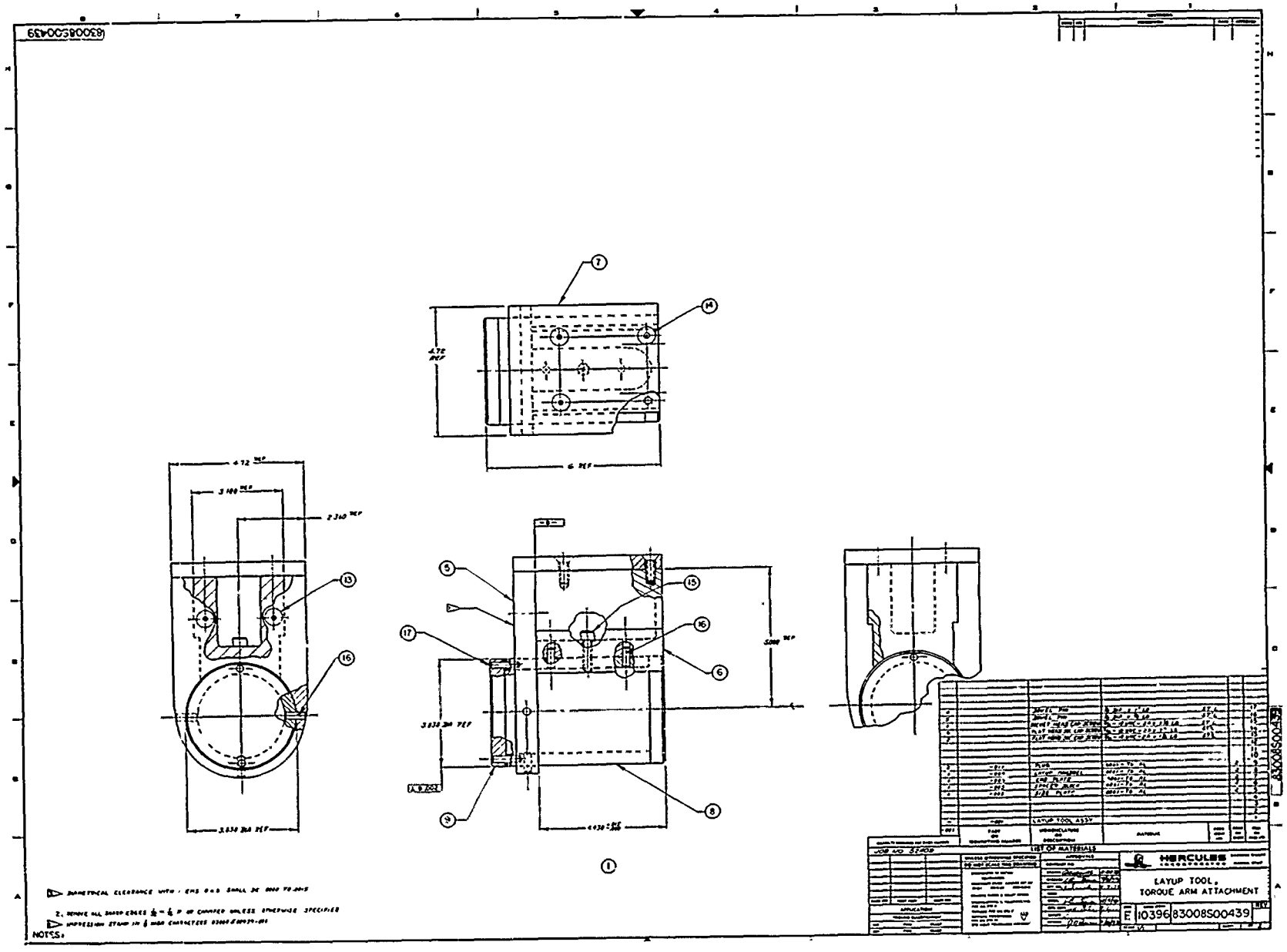

Figure 27. Layup Tool, Torque Arm Attachment, Drawing 83008S00439, Sheet 1 of 2

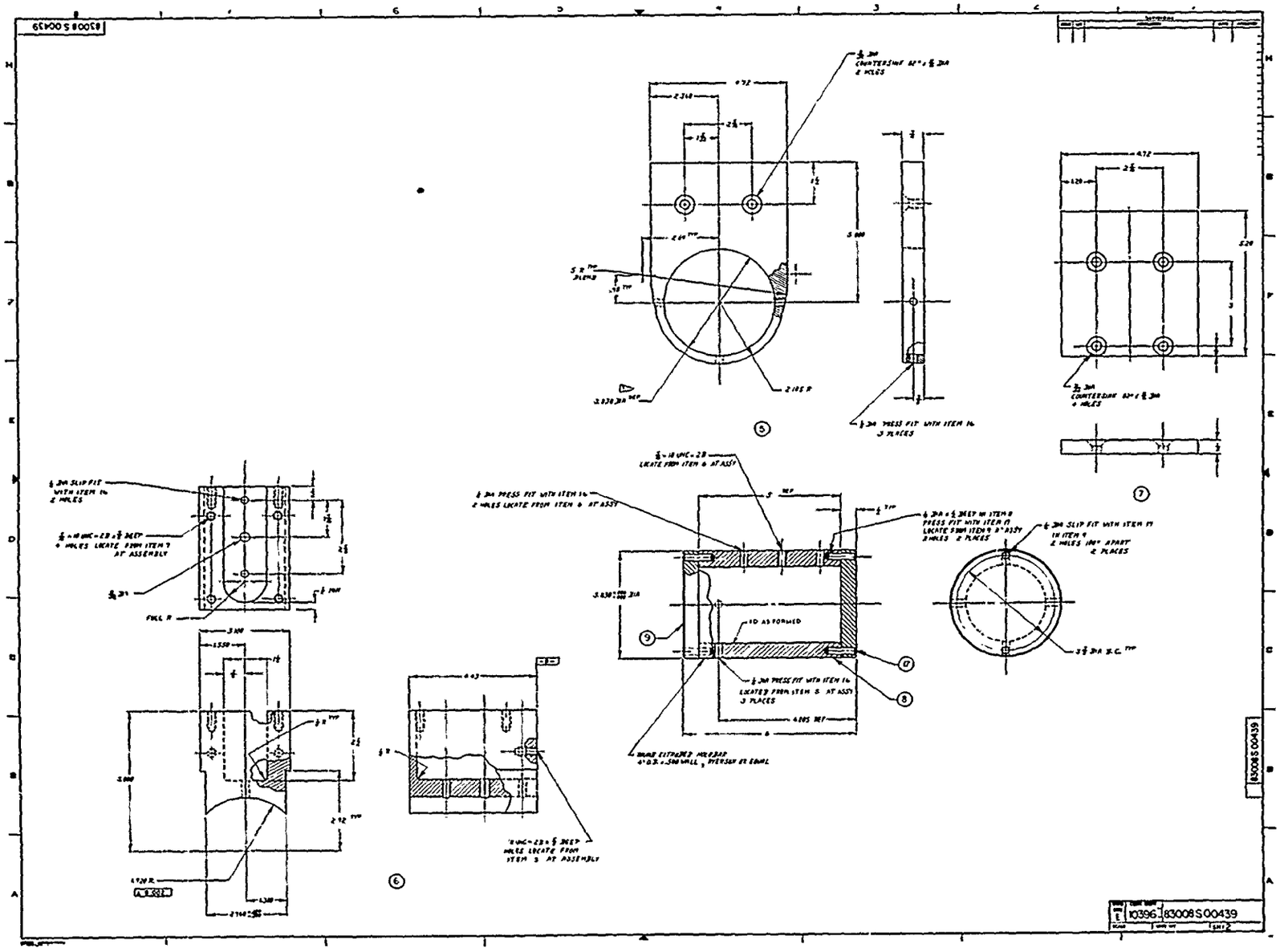

Figure 27. Layup Tool, Torque Arm Attachment, Drawing 83008S00439, Sheet 2 of 2

BEST AVAILABLE COPY

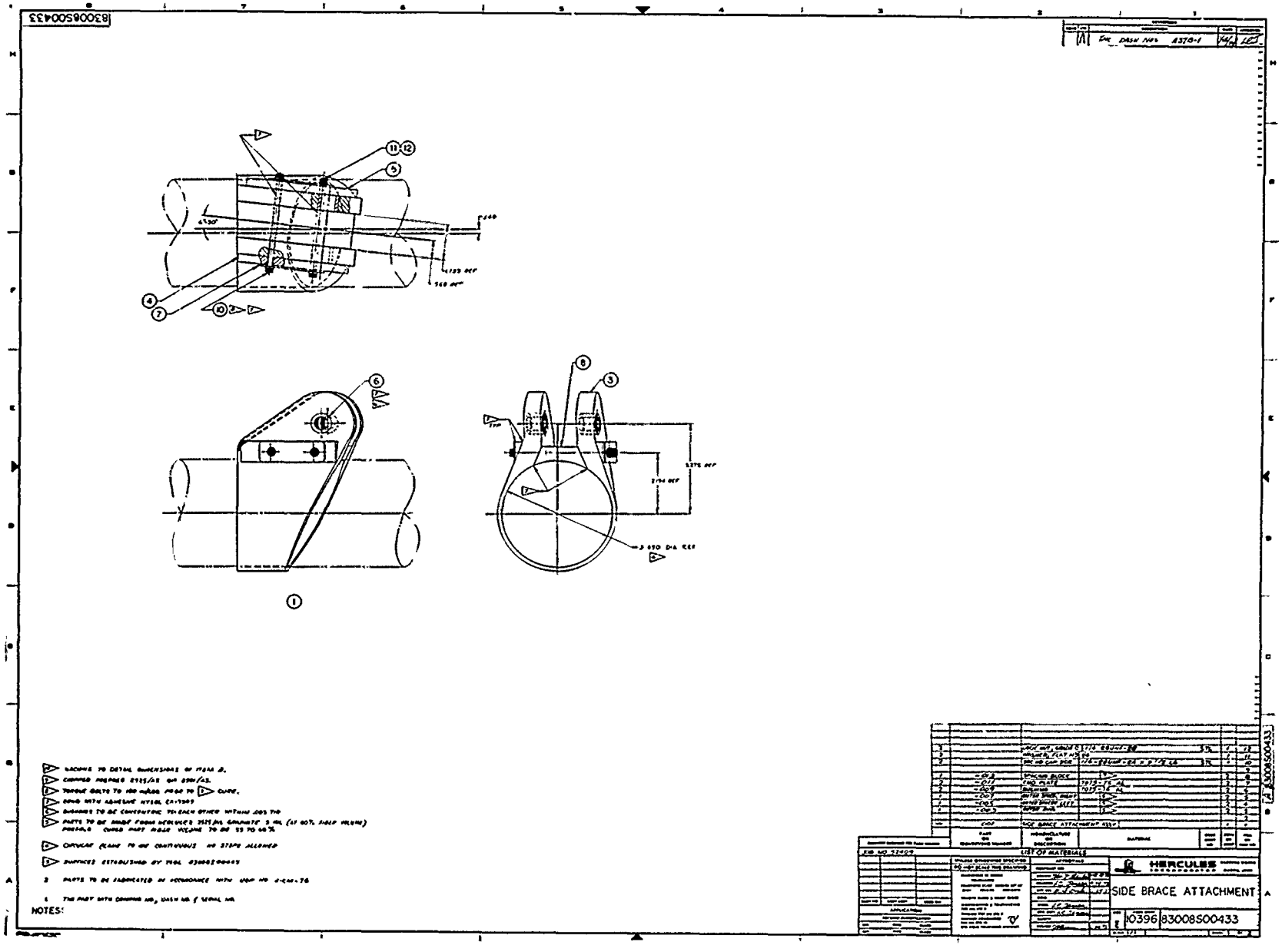

Figure 28. Side Brace Attachment, Drawing 83008S00433, Sheet 1 of 2

BEST AVAILABLE COPY

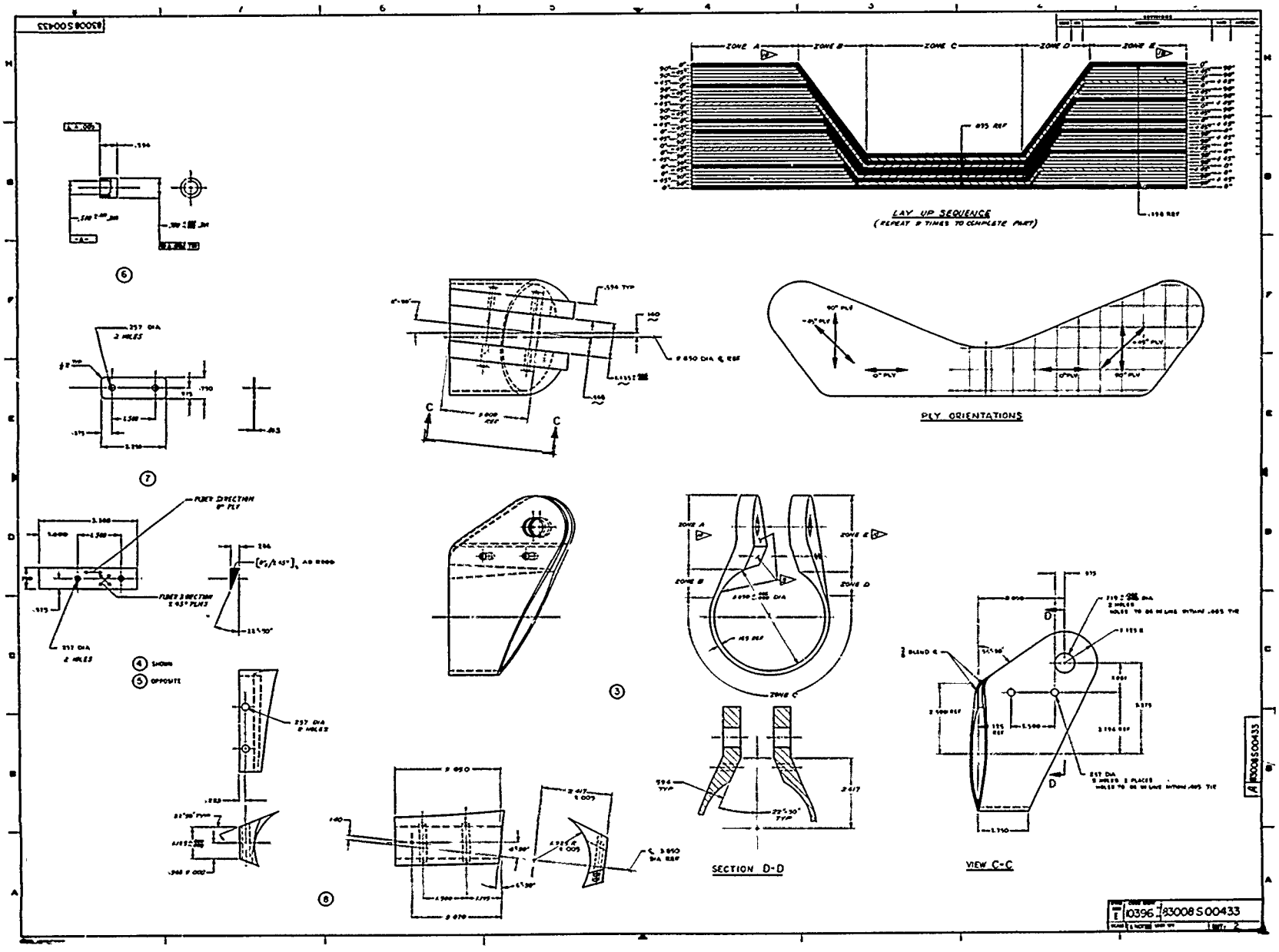

Figure 28. Side Brace Attachment, Drawing 83008S00433, Sheet 2 of 2

BEST AVAILABLE COPY

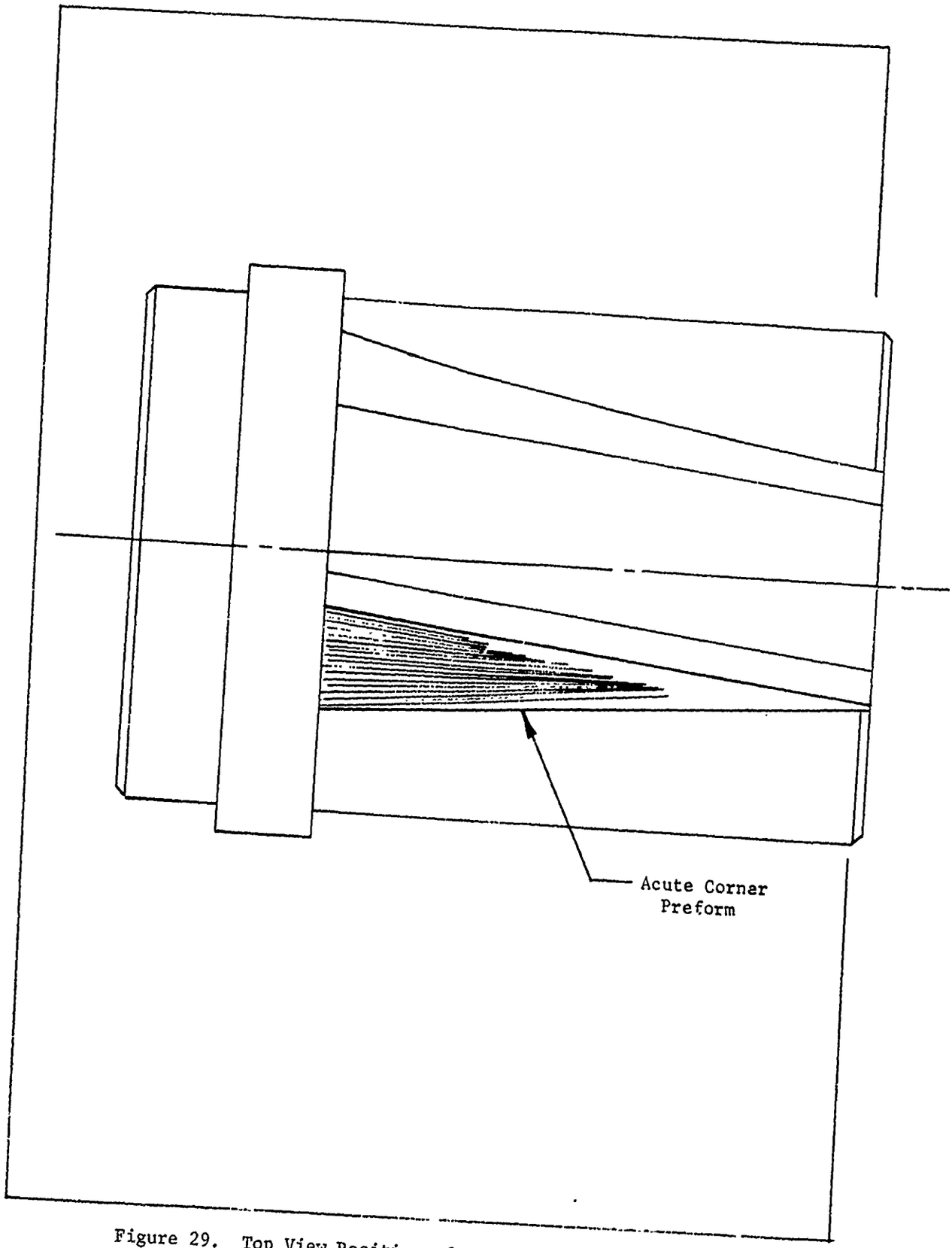

Figure 29. Top View Position of Acute-Corner Preform

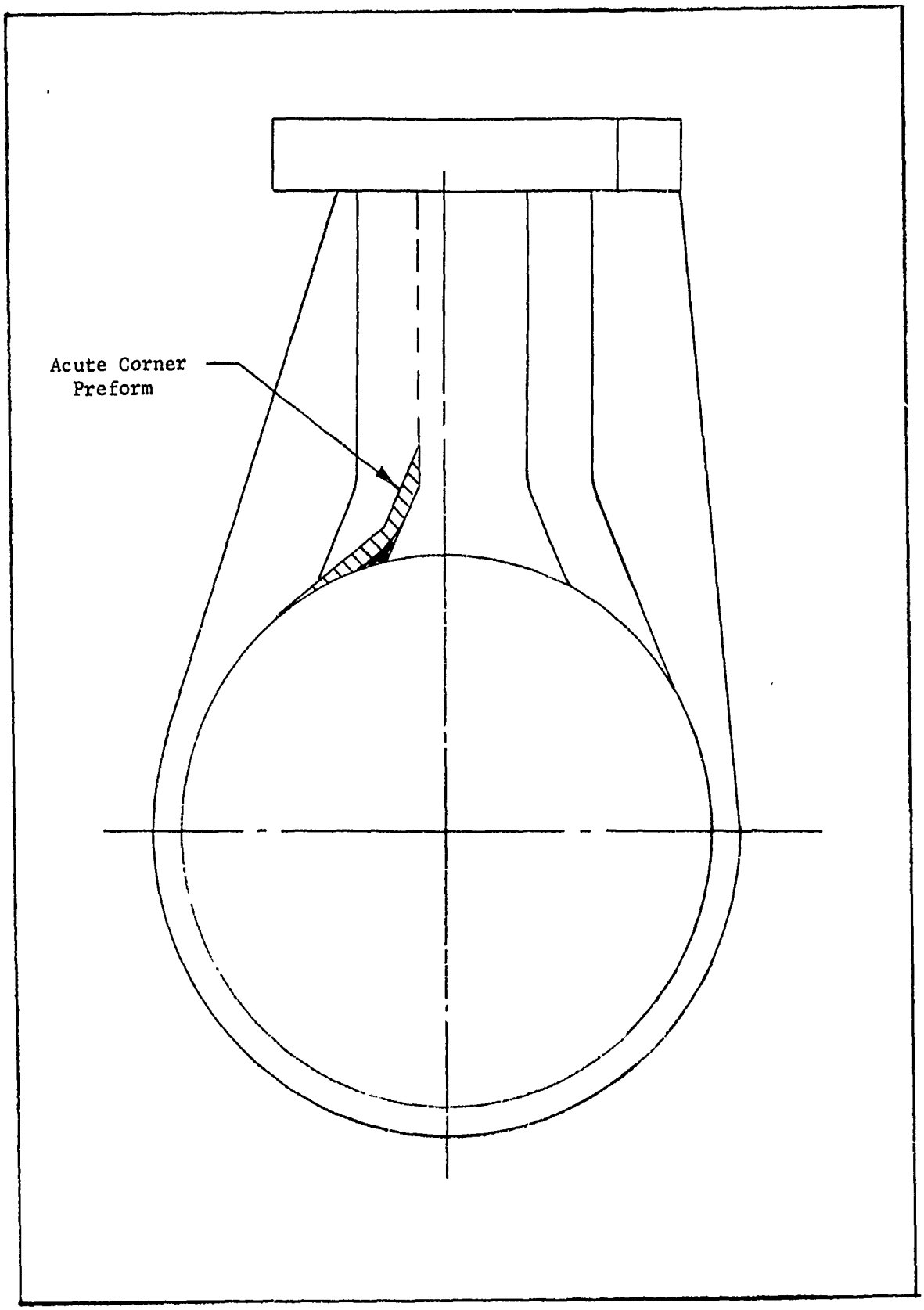

Figure 30. End View Position of Acute-Corner Preform

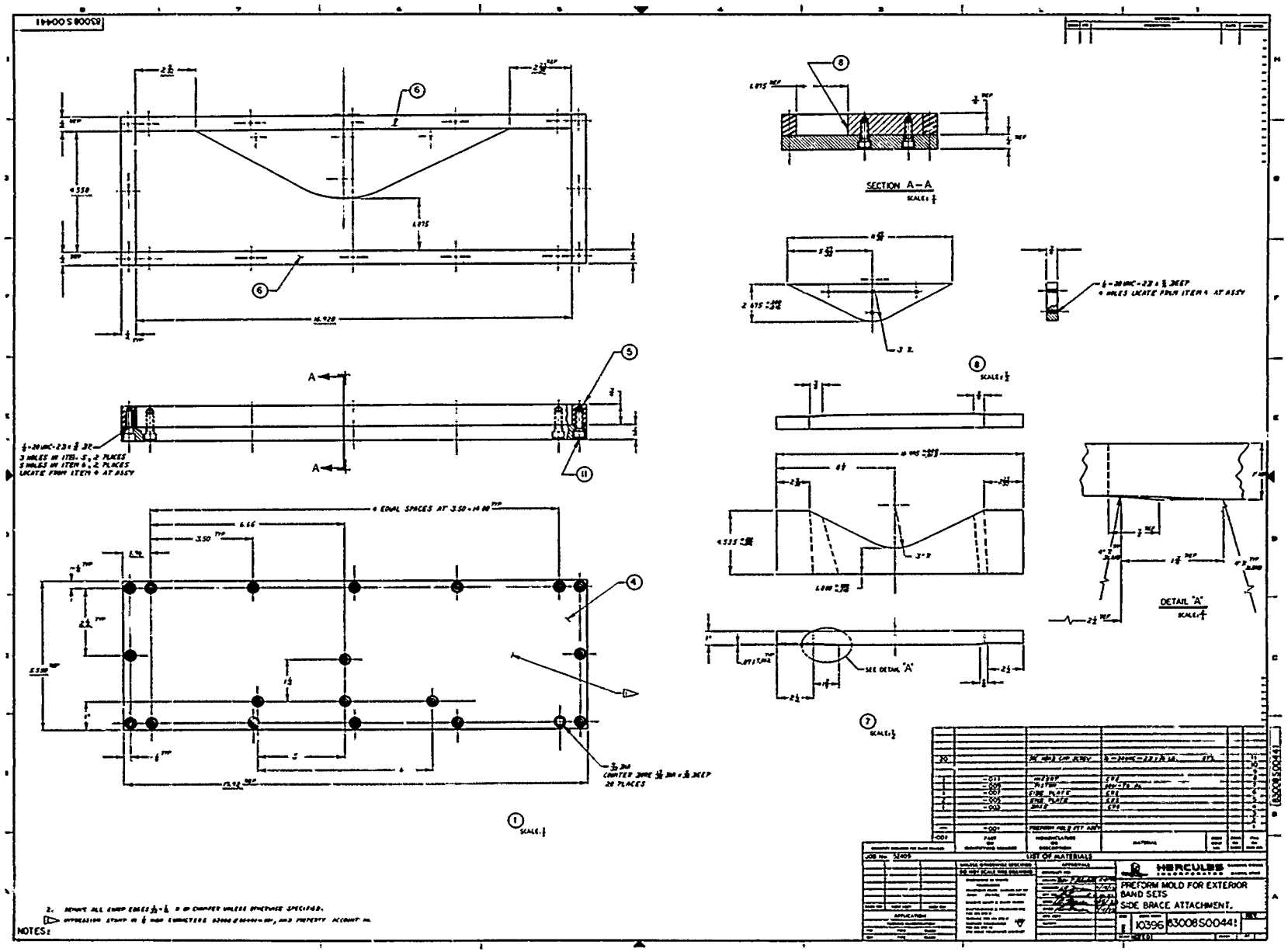

Figure 31. Exterior Band Set Mold, Side Brace Attachment, Drawing 83008S00441

BEST AVAILABLE COPY

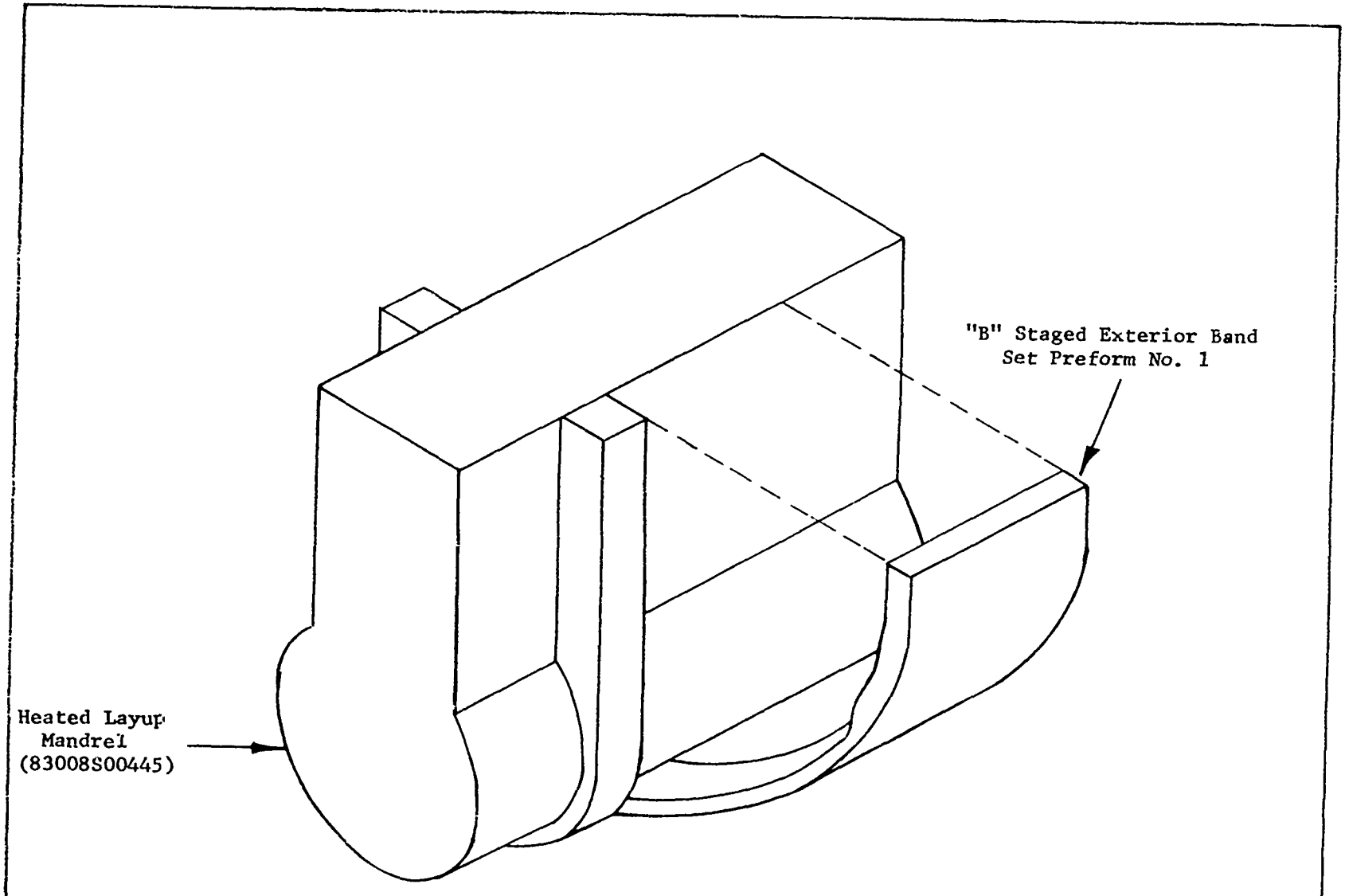

Side Brace Attachment Preform Layup

Figure 41

Figure 32. Side Brace Attachment Preform Layup

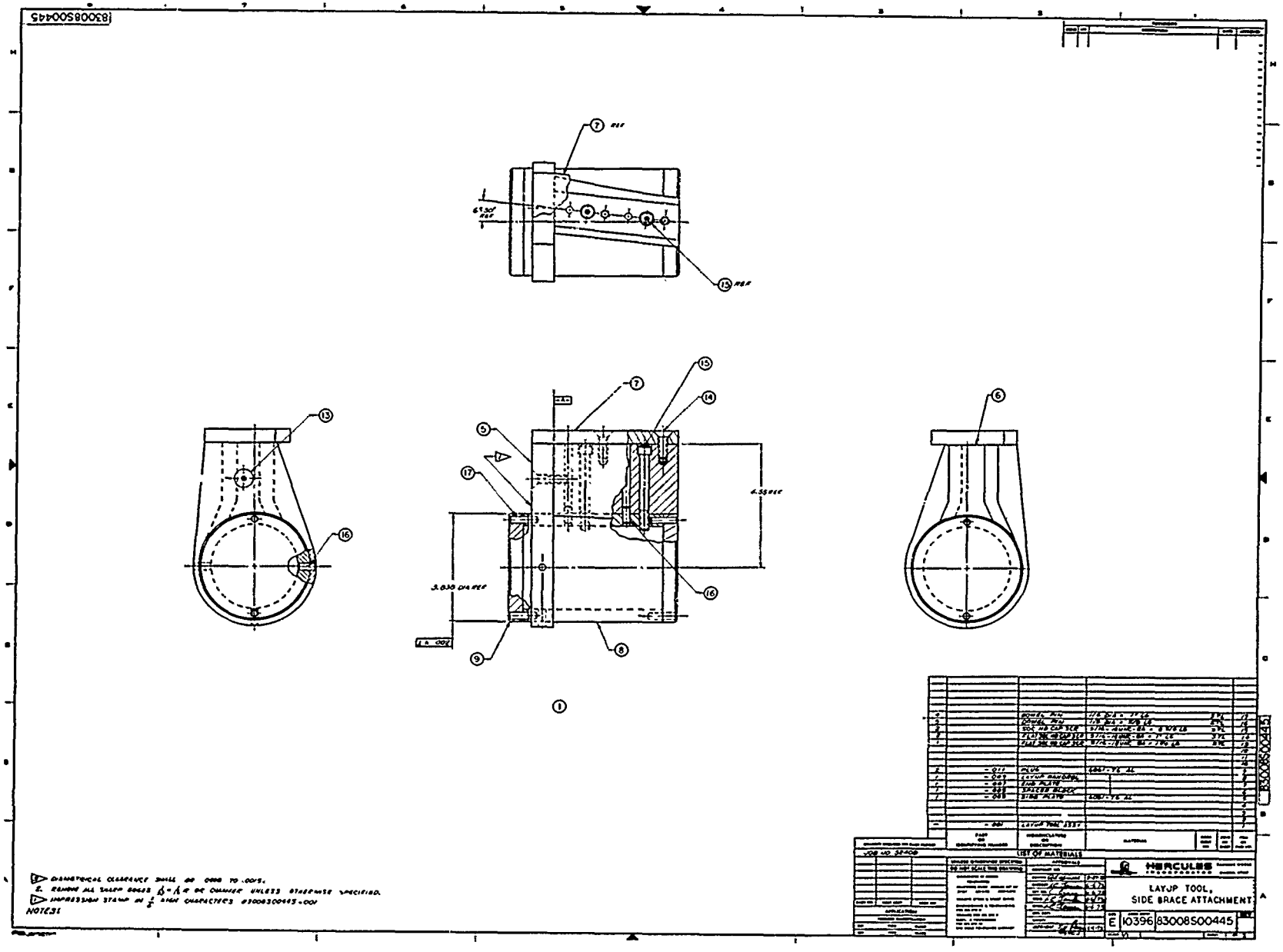

Figure 33. Layup Tool, Side Brace Attachment, Drawing 83008S00445, Sheet 1 of 2

BEST AVAILABLE COPY

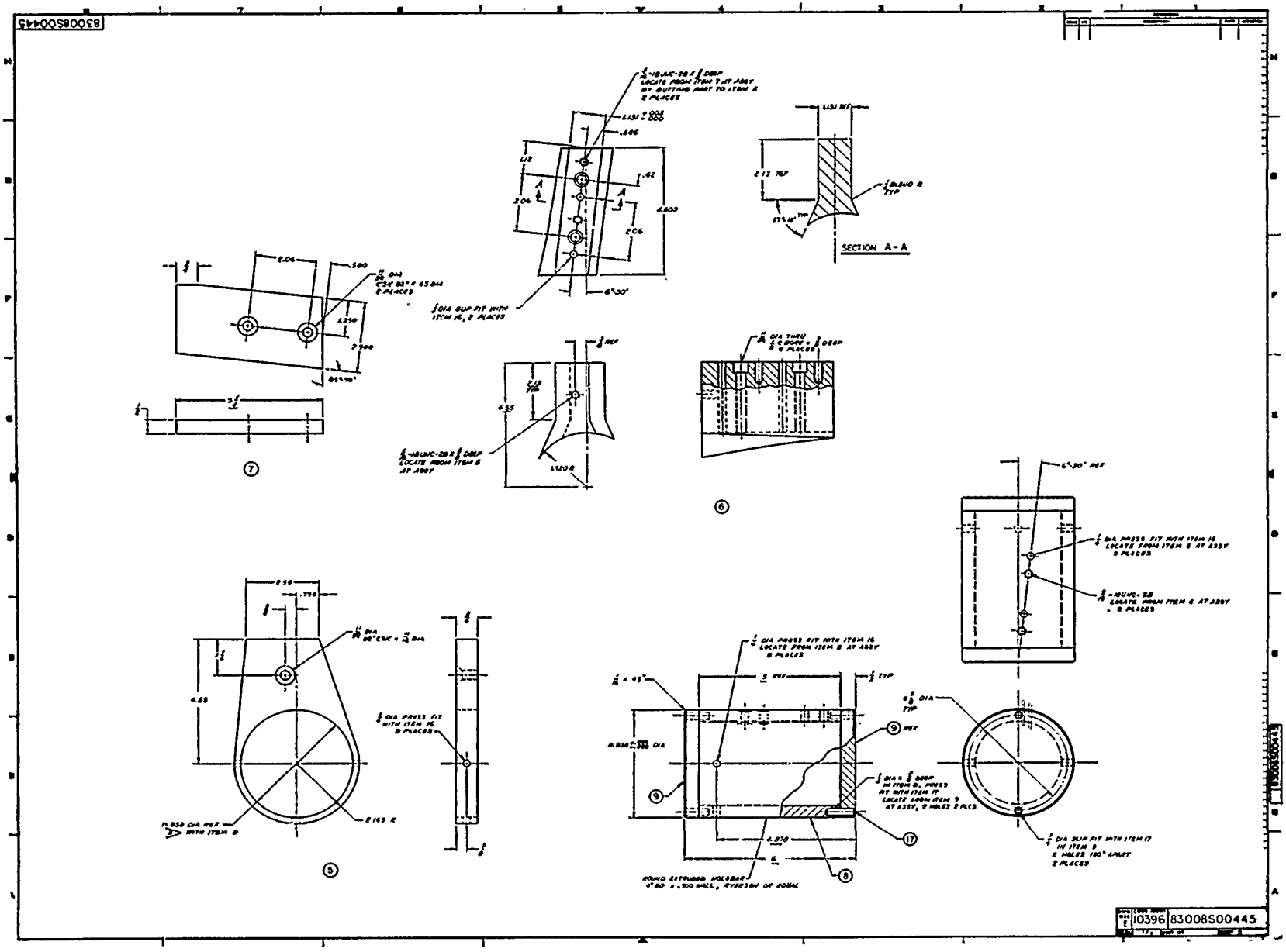

Figure 33. Layup Tool, Side Brace Attachment, Drawing 83008S00445, Sheet 2 of 2

BEST AVAILABLE COPY

C. INNER SLEEVE

The inner sleeve (Figure 34) was fabricated on an aluminum mandrel as shown in Figure 35 using a (0, $\pm$45, 0) layup of graphite prepreg. A compaction/bleed cycle every two plies during layup was performed to eliminate any potential wrinkles. Vacuum bag, autoclave cure was made at 350° F. After the part was removed from the mandrel, it was subjected to a 2 hour, 400° F postcure.

Machining was not required in the bore of the composite sleeve since it was cured to size. Thus, only the ends and the outside diameter of the sleeve were machined.

D. GUSSETS

The 0.33-inch-thick gussets used to support the inner sleeve in the trunnion were fabricated as rectangular plates using a $(0_2/\pm45/90_2/\pm45/0_2)_{6S}$ layup from prepreg tape. These plates were then cured in a press at 350° F. Templates were used to machine the gussets to the required contour. The templates were made by building dams at the various locations inside the trunnion area. A plastic compound was then poured onto the dams and allowed to cure at room temperature. Upon removal, these templates provided complete contour definition of the gussets.

E. OUTER CYLINDER/TRUNNION

The initial tooling concept used for the first outer cylinder/trunnion fabricated on this contract is shown in Figure 36. A feature of this first mandrel was that it had an elliptical cross section in the trunnion area. To fabricate a gear assembly that would retract into the restricted envelope available in the existing wing, it was necessary to reduce the trunnion depth. This resulted in another mandrel being fabricated with an oval cross section in the trunnion area. (See Figure 37.) All of the last three outer cylinder/trunnions were fabricated on the second mandrel. Design of the mandrels was such that partial machining was accomplished before the mandrel was removed.

Fabrication of the outer cylinder/trunnion required the layup of 0, $\pm$45, and 90° plies with frequent compaction steps. Figures 38, 39, and 40 illustrate the approach used in applying these plies. Additional $\pm$45 ply reinforcement material was added to the trunnion pivot hole area as indicated in Figure 41.

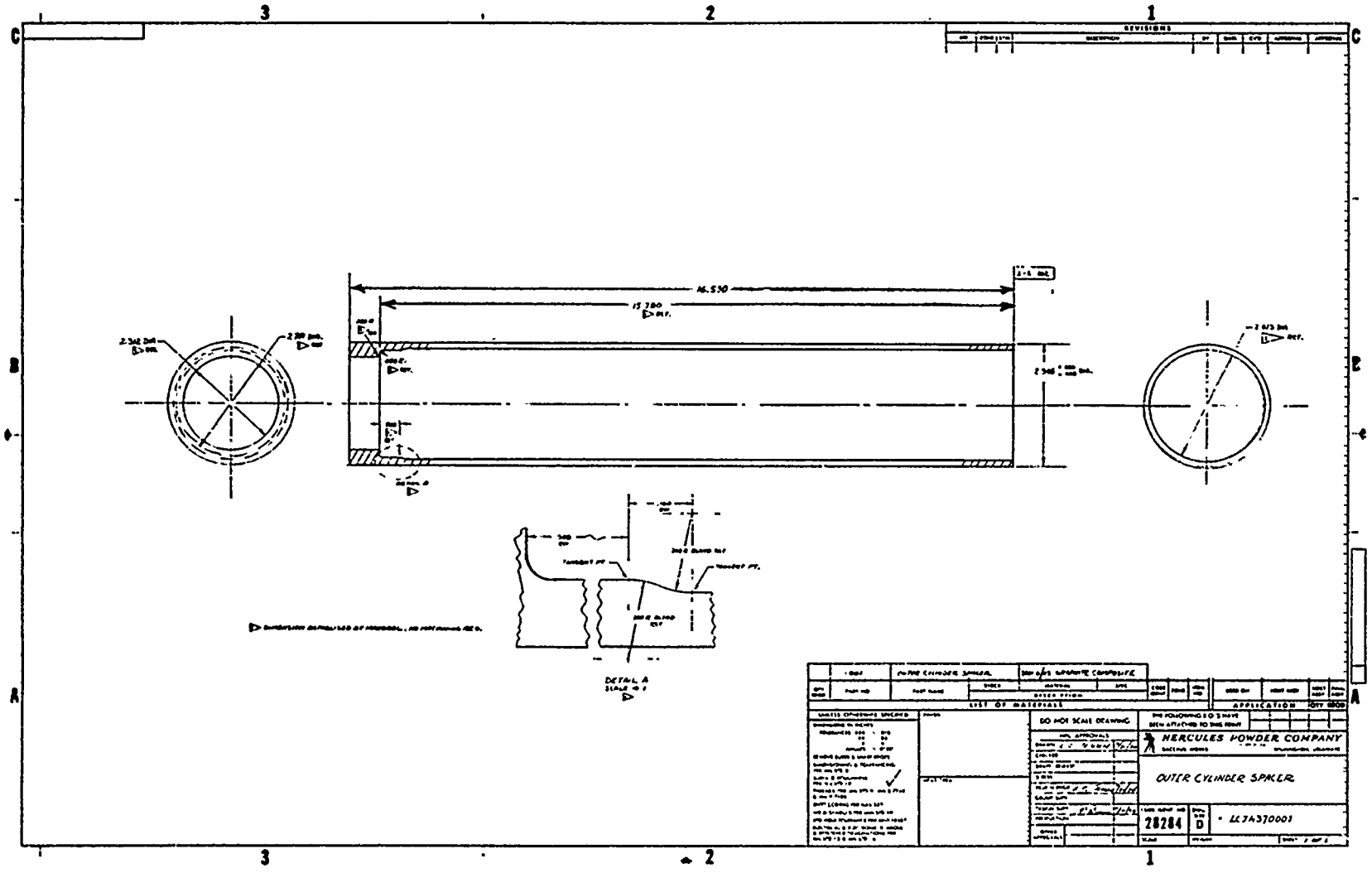

Figure 34. Inner Sleeve (Drawing LCJ370001)

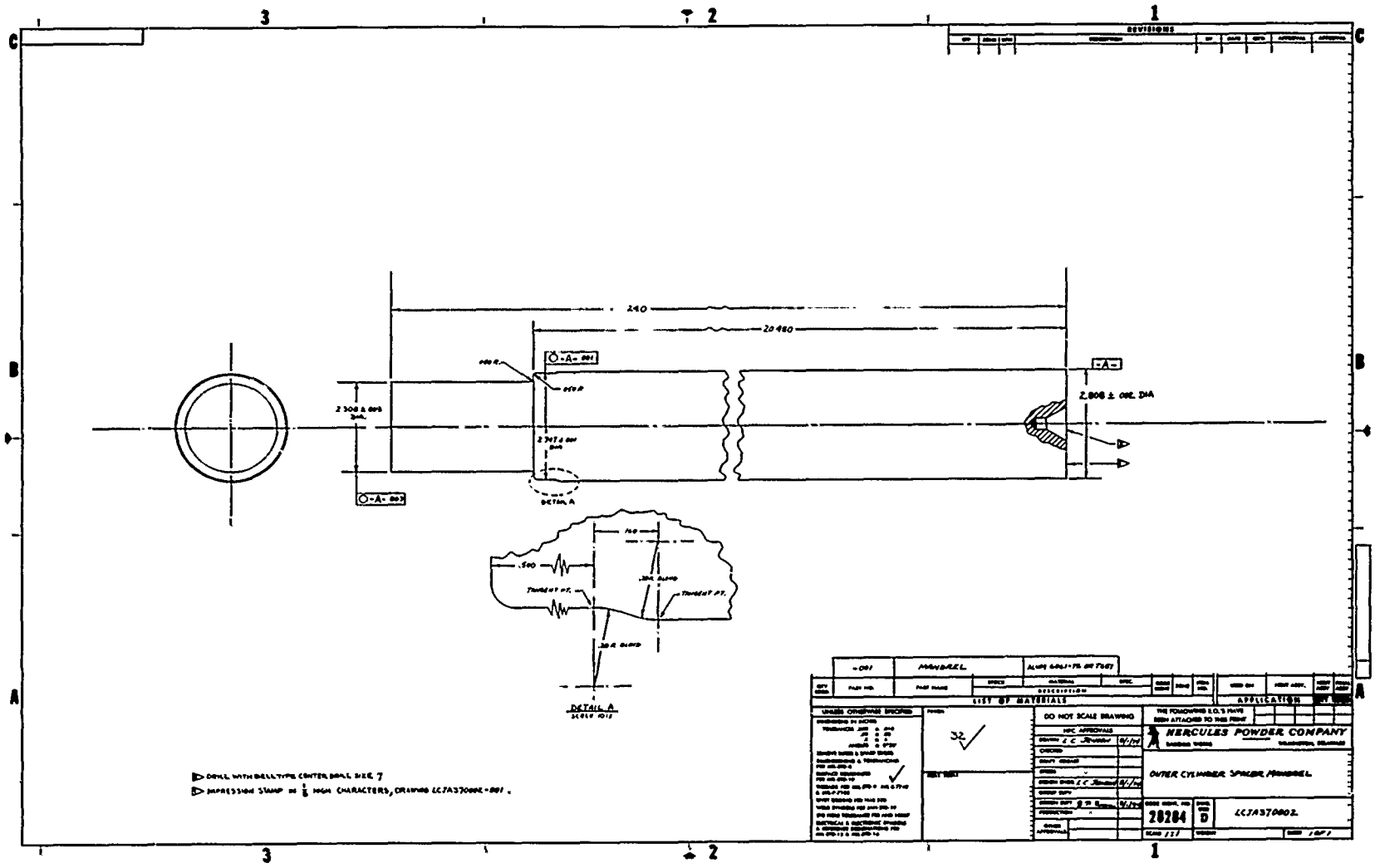

Figure 35. Inner Sleeve Mandrel (Drawing LCJA370002)

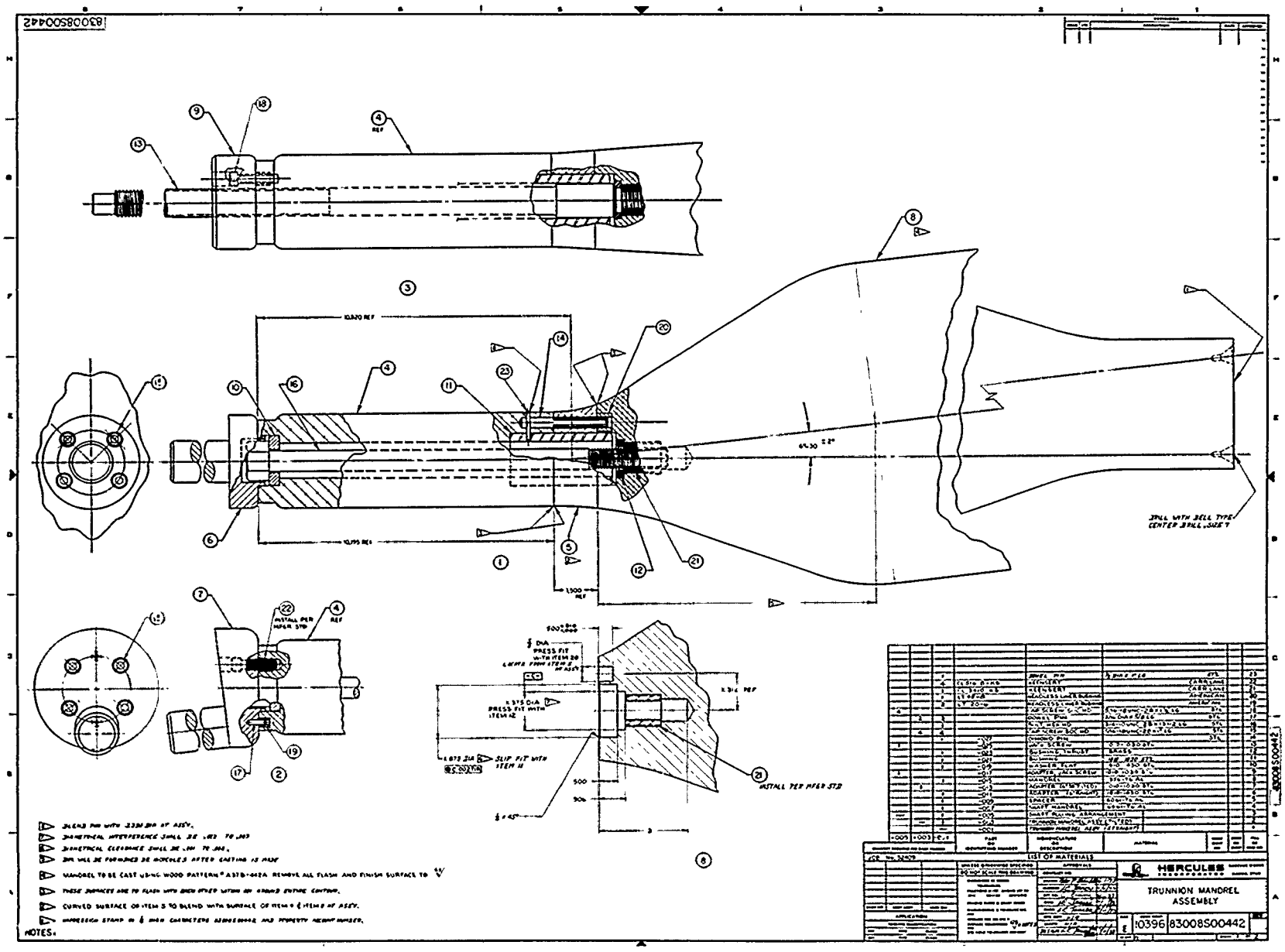

Figure 36. First Trunnion Mandrel Assembly, Sheet 1 of 2

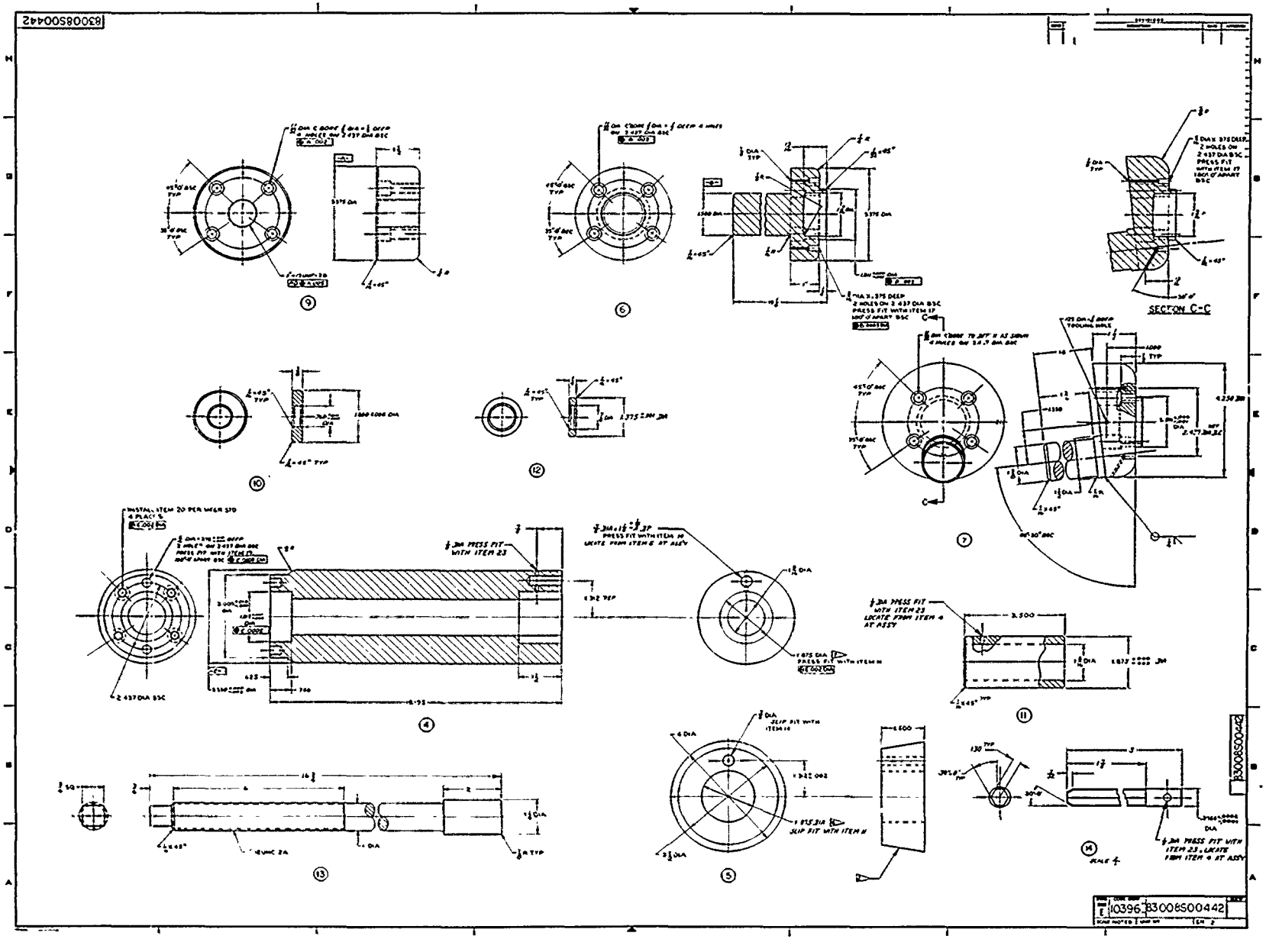

Figure 36. First Trunnion Mandrel Assembly, Sheet 2 of 2

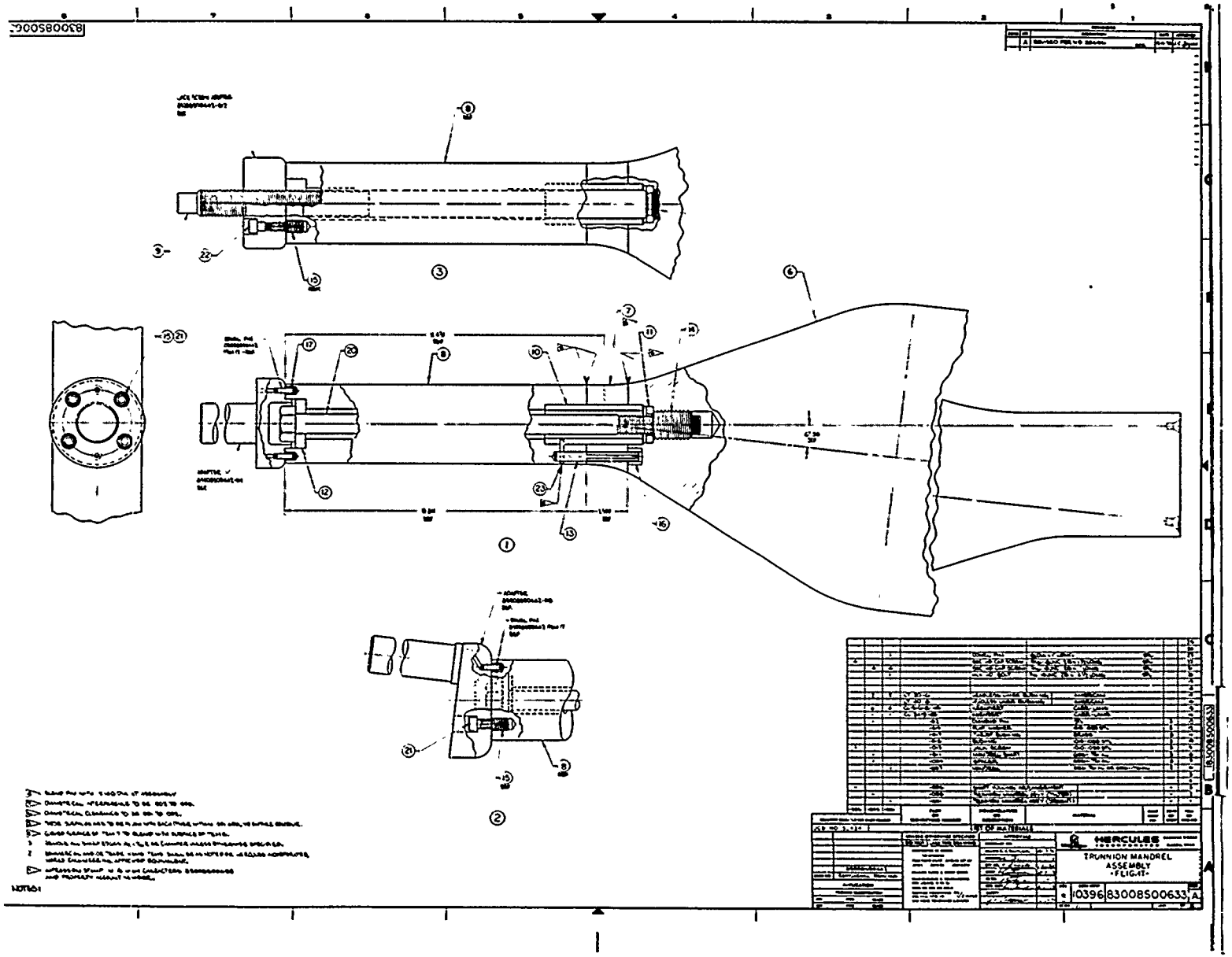

Figure 37. Second Trunnion Mandrel Assembly (Drawing 83008S00633) (Sheet 1 of 2)

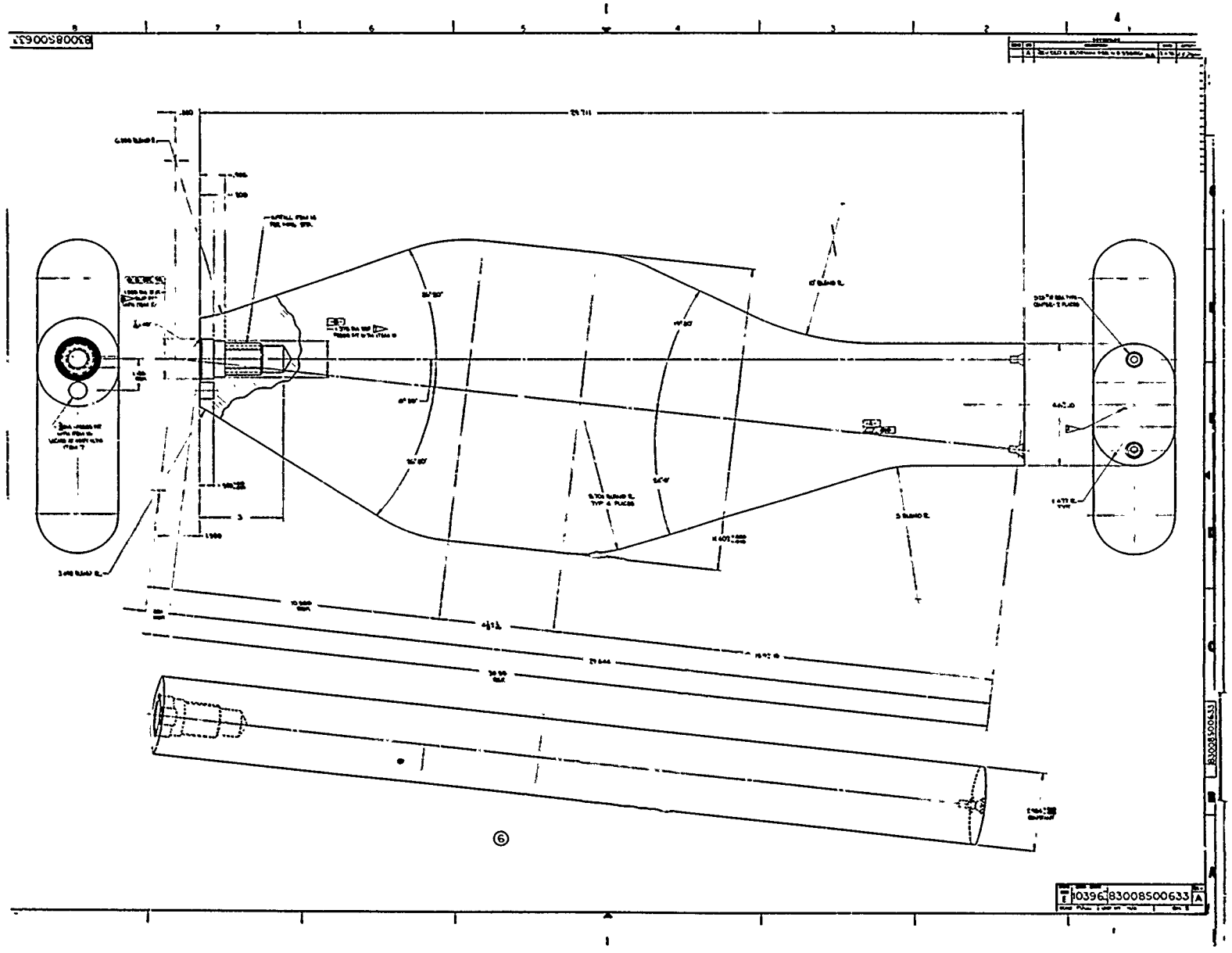

Figure 37. Second Trunnion Mandrel Assembly (Drawing 83008S00633) (Sheet 2 of 2)

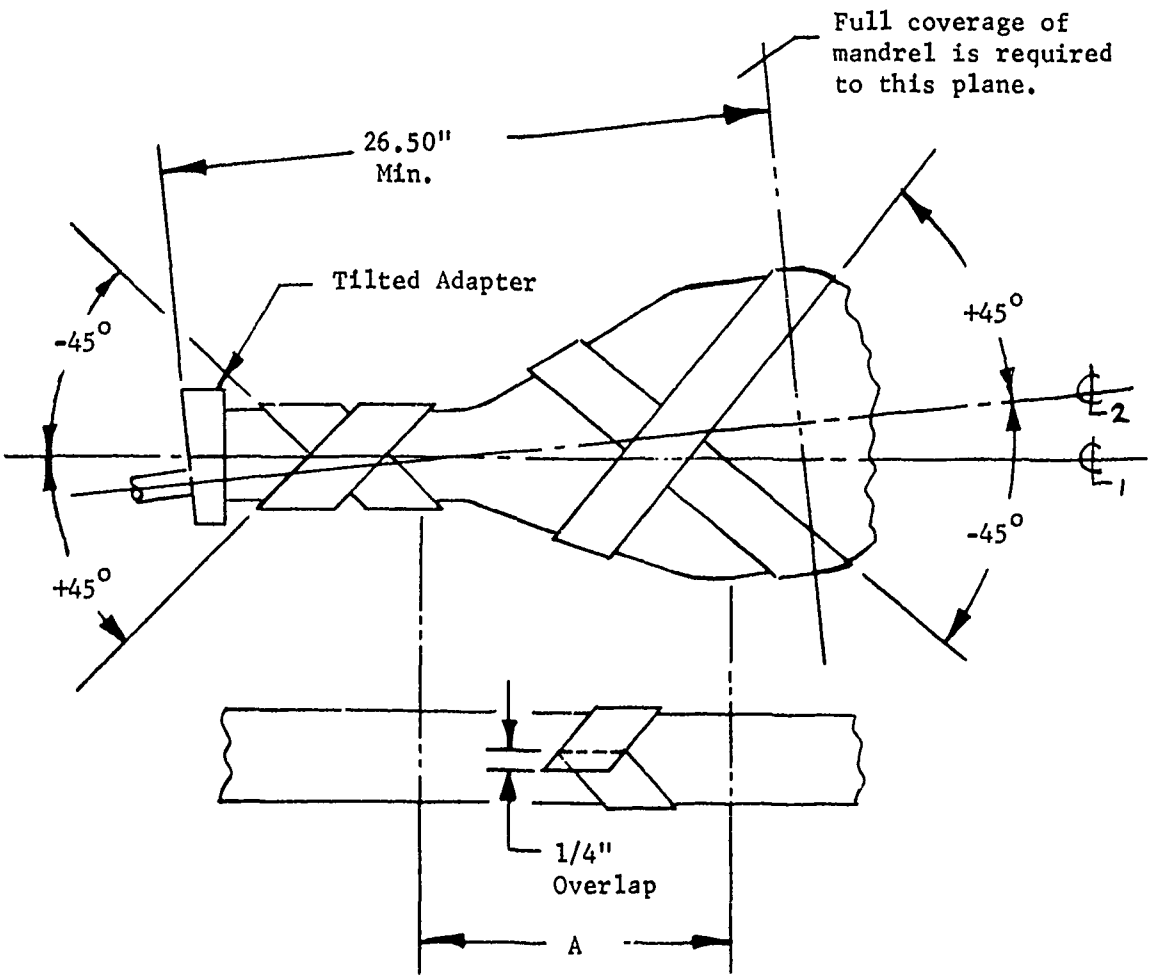

To maintain 45° angle in Zone A, cut 3" tape as required. Overlap tape as shown.

Figure 38. Trunnion Layup Detail for ±45° Plies, Full Coverage

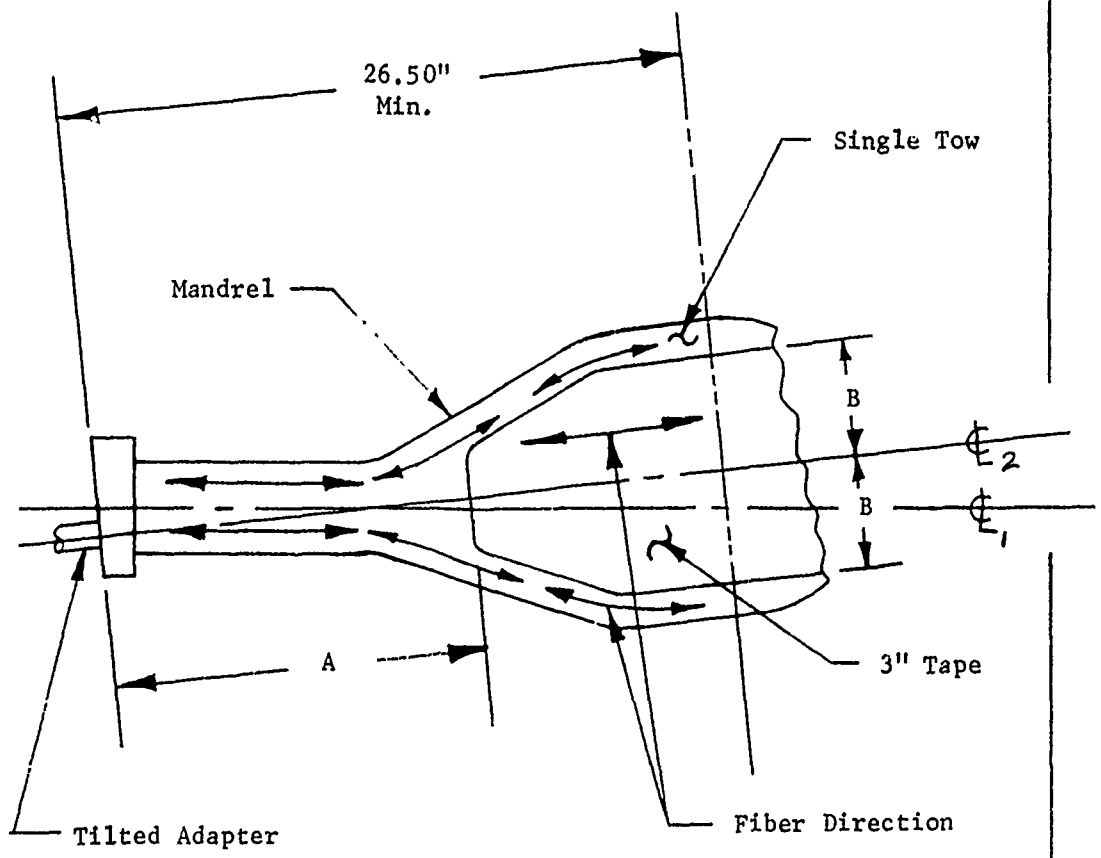

Layup Procedure

1. Lay tow on mandrel until the B dimension is satisfied.
2. Lay tow on mandrel until the A dimension is satisfied.
3. Lay 3" tape (1 ply) in area shown in above sketch.

Figure 39. Trunnion Layup Detail for 0° Plies

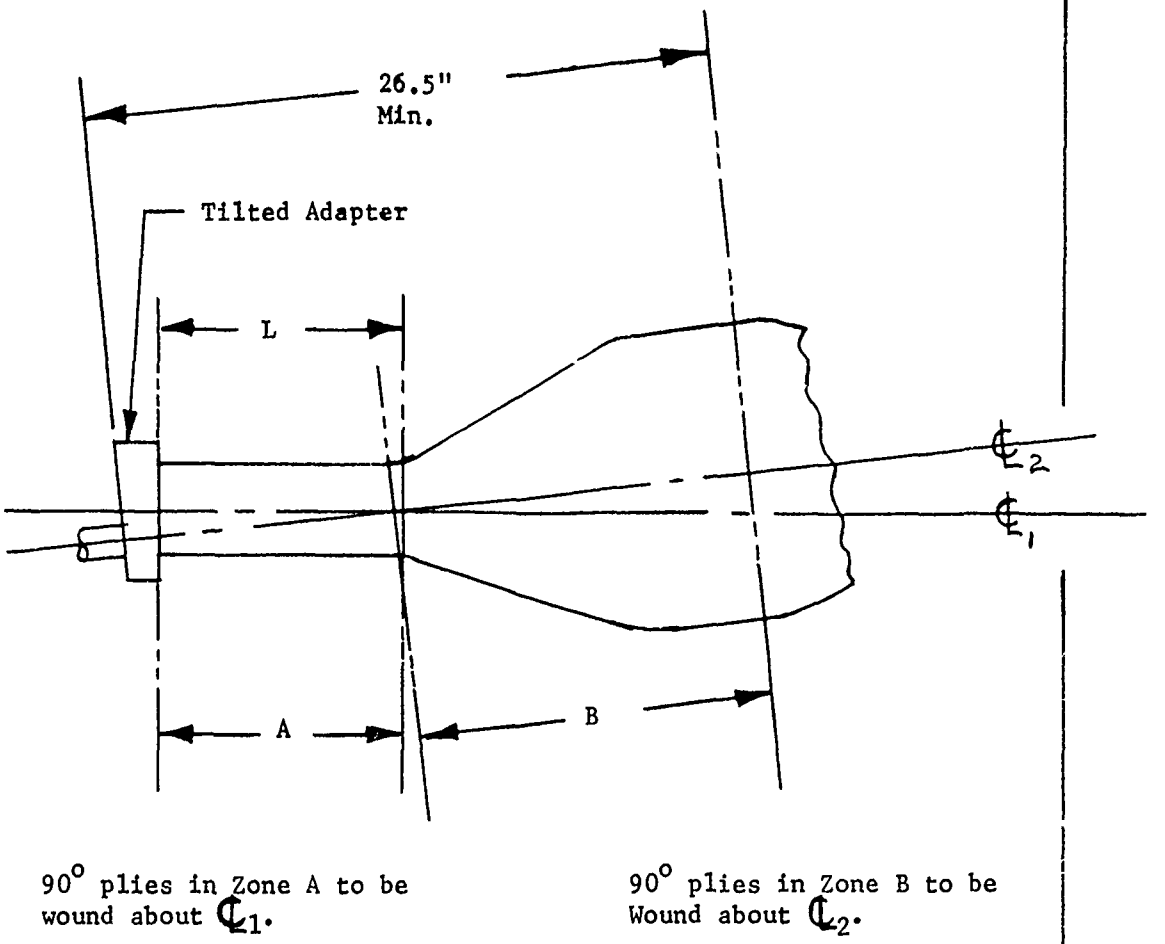

Figure 40. Trunnion Layup Detail for 90° Plies, Full Coverage

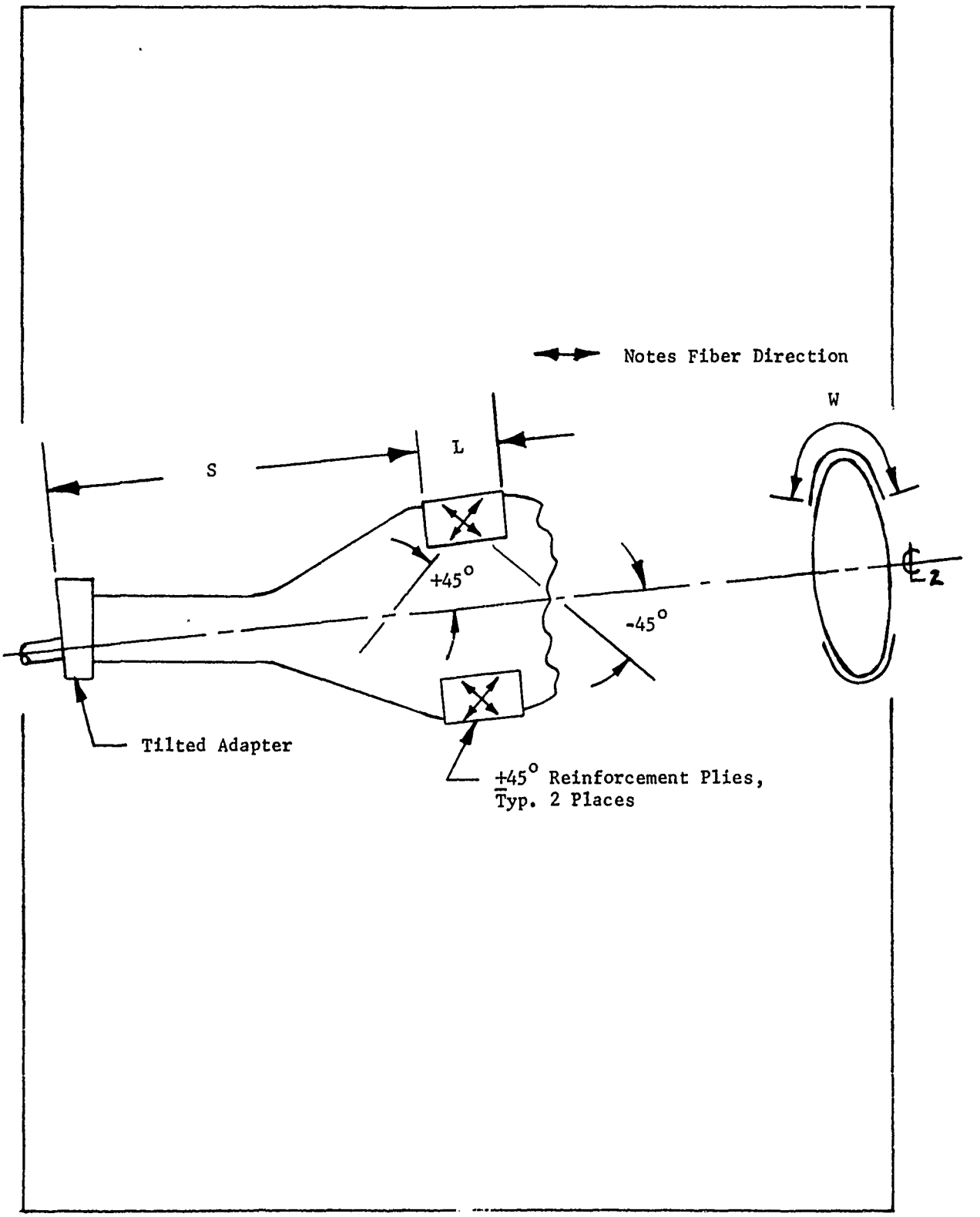

Figure 41. Trunnion Layup Detail for ±45° Reinforcement Plies

1. First Outer Cylinder/Trunnion Design

Both Hercules 2525/AS prepregged tow and tape were incorporated into the first outer cylinder/trunnion fabricated. The 0° plies used both tow and 5 mil tape, while the 90° plies were wound with tow. All angle plies were made with cut strips of prepreg tape. Figure 42 presents the layup sequence used on the first part. After ply 64 was installed, a helical layer (approximately ±45°) was wound over the entire structure. This helical layer of continuous prepreg tow tie the entire structure together. A 2-hour cure at 300° F was performed in an autoclave.

The only exterior surface machined except end cutoffs was the area of the outer cylinder (7.75 inches from the end). Machined configuration of this first part is shown in Figure 43.

2. Second Outer Cylinder/Trunnion Design

Hercules 3501-5/AS prepreg tape was used to fabricate the second outer cylinder/trunnion. A portion of the 0° plies and all of the 90° plies were made with 1/4 inch wide strips of prepreg tape. It was felt that the use of 1/4-inch-wide tape in place of the prepreg tow used on the first structure would improve the structure quality. Figure 44 presents the layup sequence. The overall fabrication process was the same as that used on the first part except the mandrel had an oval cross section in the trunnion area. The autoclave cure was at 350° F for 2 hours.

The machined configuration of this second design is shown in Figure 45. Due to envelope restrictions for retraction tests, it was necessary to machine the exterior flat areas of the trunnion faces, which resulted in significant material being removed in the flare area between the cylinder and trunnion.

In addition, it should be noted that the transition from the cylinder diameter to the trunnion neck was steep. Trunnion depth (outside face-to-face dimension) on this second design was 3.404 inches, compared to 4.05/5.12 inches on the first design.

3. Modified Second Design of Outer Cylinder/Trunnion

Hercules 3501-5/AS prepreg tape was used to fabricate the second outer cylinder/trunnion of the second design. Fabrication methods used were identical to those used on the previous part, except a different compaction cycle was incorporated to improve structural quality. The layup sequence is shown in Figure 44.

Machining was performed in accordance with Figure 46. Note that the modified transition from the cylinder OD to the trunnion flare is more gradual than in the previous part.

BEST AVAILABLE COPY

Ply Type	Material Type
0°	2525/AS, 3" tape (5 mil) and 2525/AS, .13" to .16" single tow
90°	2525/AS, .13" to .16" single tow
± 45°	2525/AS, 3" tape (5 mil)
± 45° Short	2525/AS, 3" tape (5 mil)

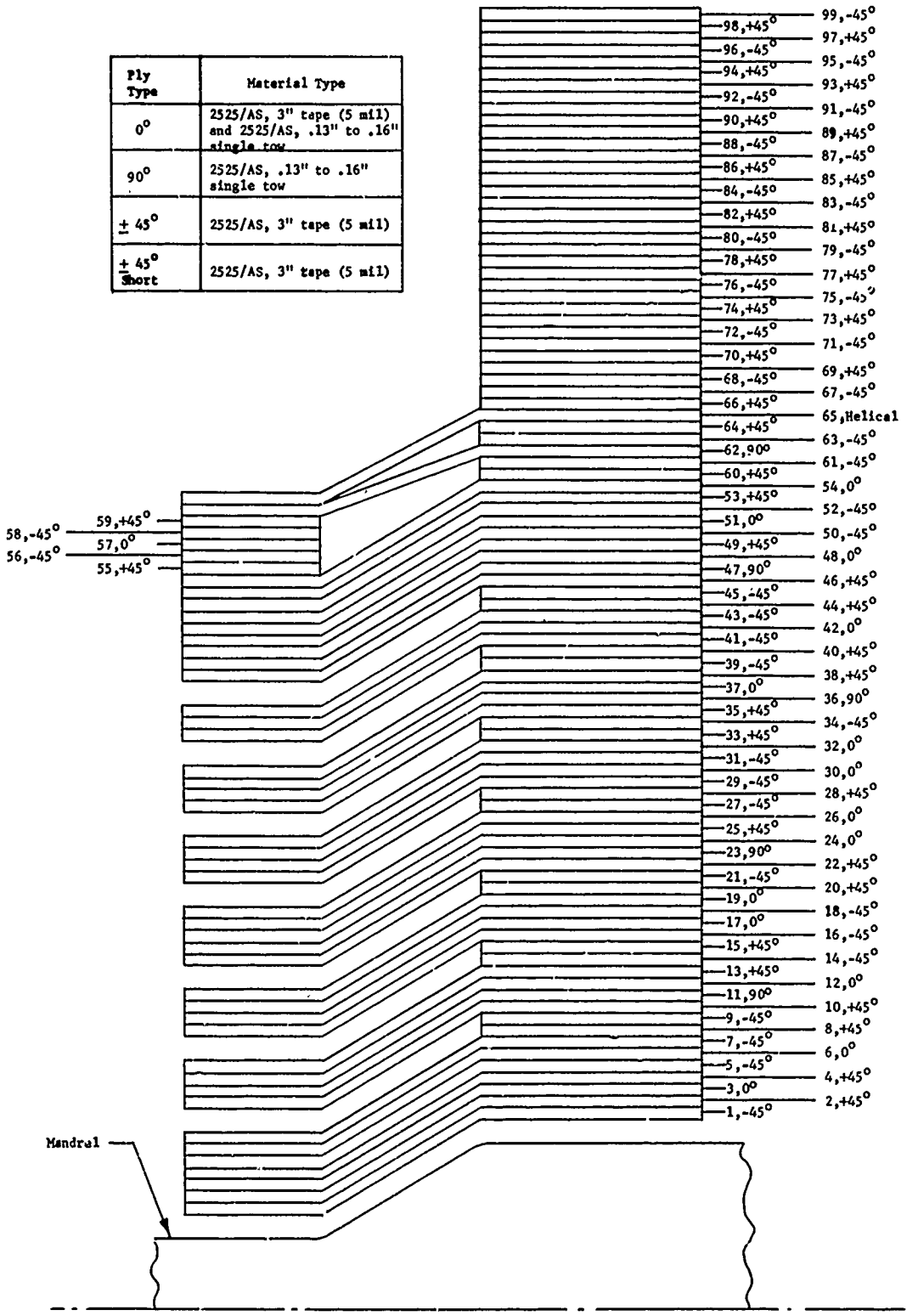

Figure 42. First Design Trunnion Layup Sequence

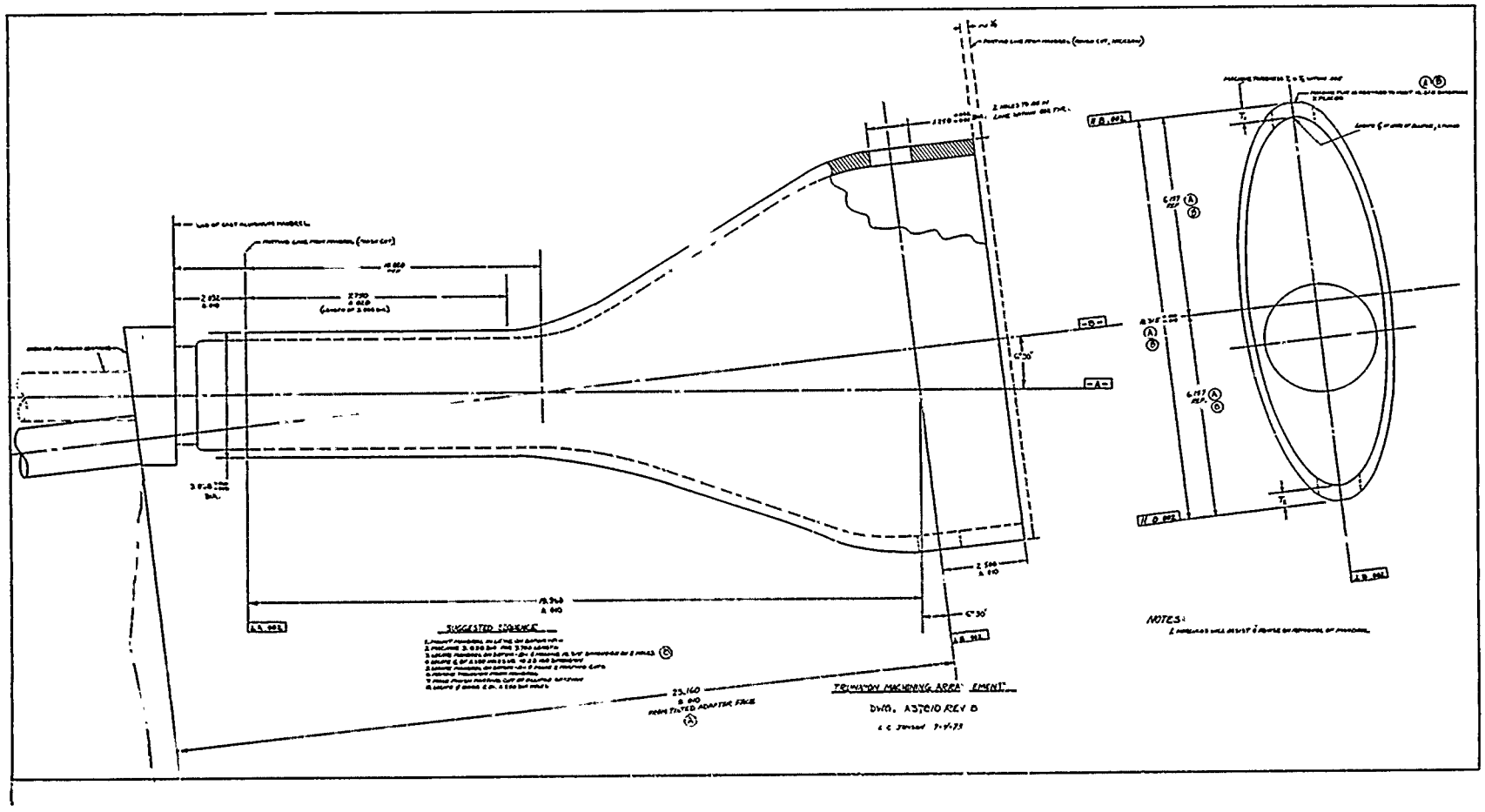

Figure 43. Trunnion Machining Arrangement, Drawing A37B10

BEST AVAILABLE COPY

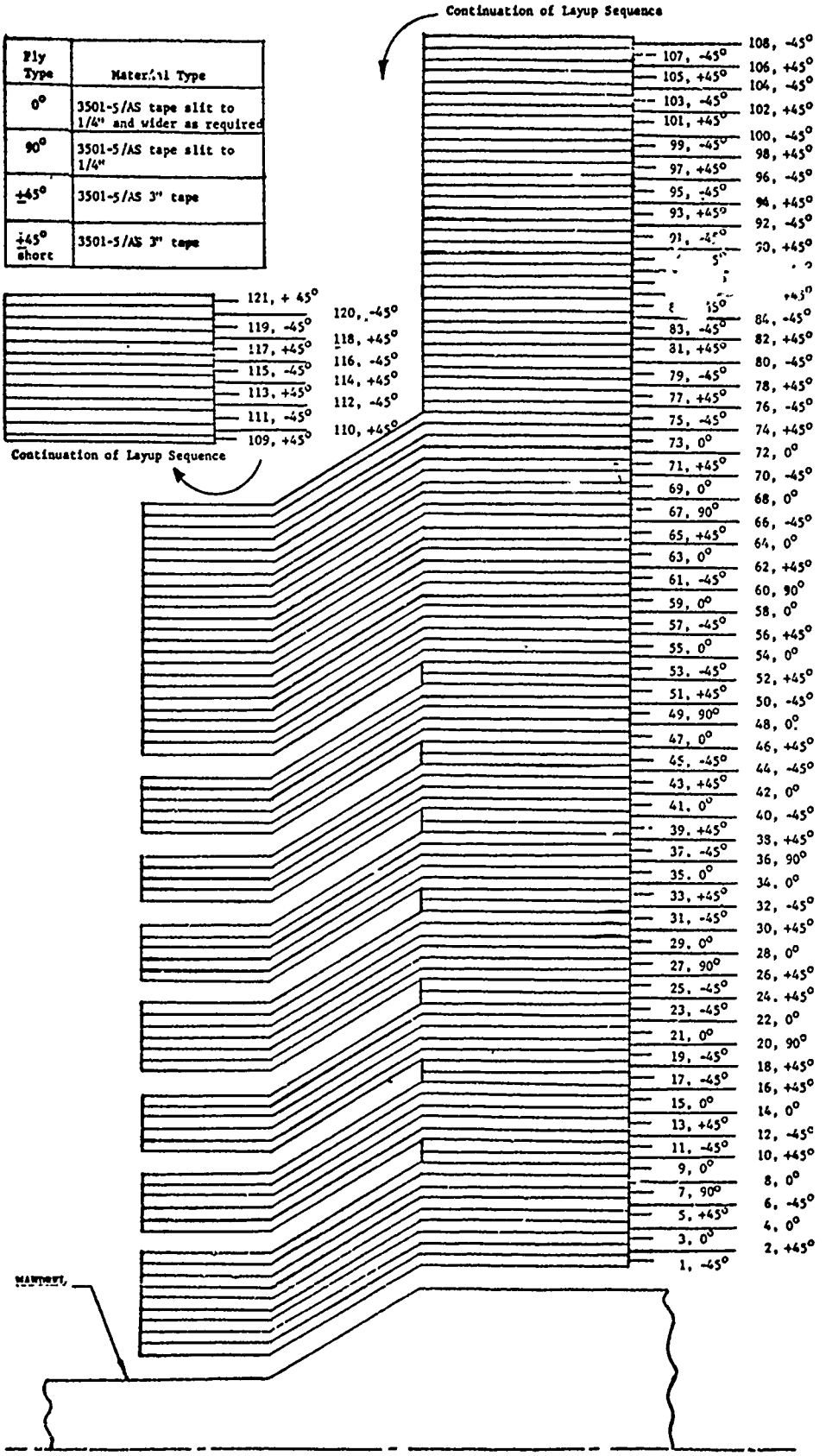

Figure 44. Second Design Trunnion Layup Sequence

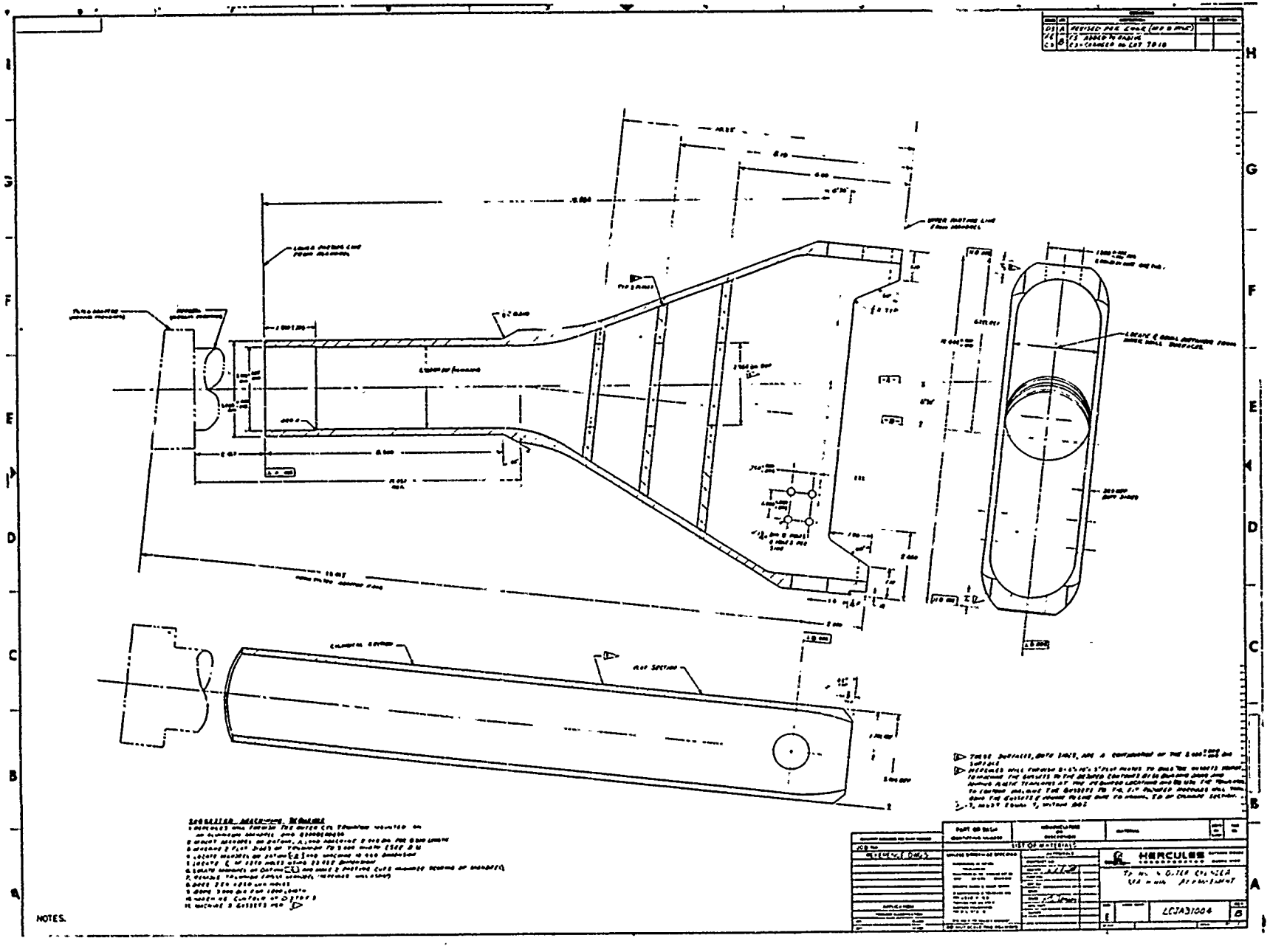

Figure 45. Second Design Machined Configuration (Drawing LCJA37004, Rev B)

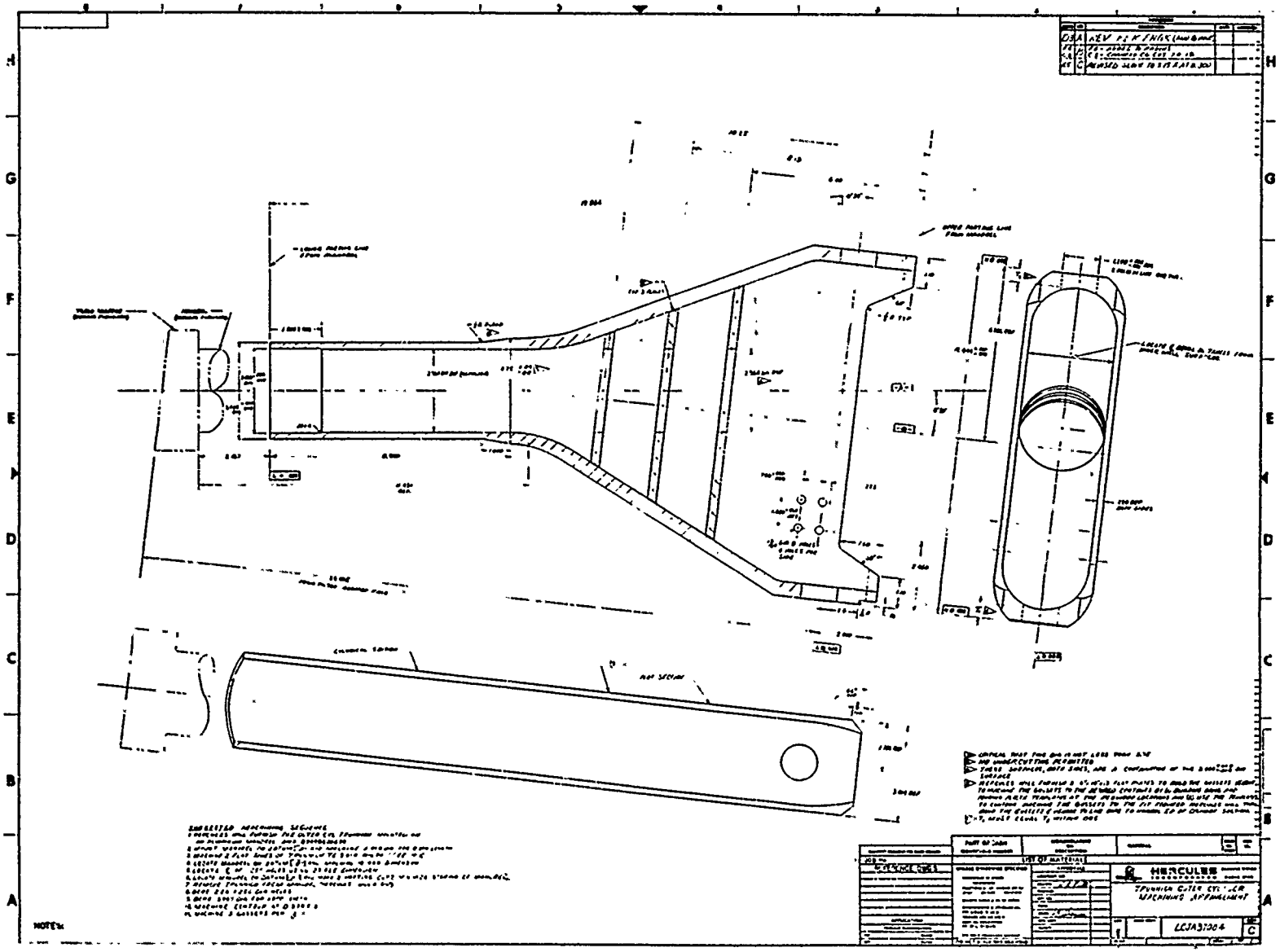

Figure 46. Modified Second Design Machined Configuration
(Drawing LCJA37004, Rev. C)

4. Third and Final Design of Outer Cylinder/Trunnion

Material used in fabricating the third design was Hercules 3501-6/AS. Test failures of the previous two gear assemblies found the design lacking material in the highly stressed transition area between the cylinder and trunnion. In the final design, this critical cross section was reinforced by adding various lengths of 0°, $\pm 45^{\circ}$, and 90° plies (Figure 47) dispersed between the cylinder and trunnion plies. The layup sequence is shown in Figure 48. A 2-hour cure at 350° F was performed in the autoclave.

Machining was performed in accordance with Figure 49 and was limited to that performed on the first outer cylinder/trunnion. Material was removed only in the area of the outer cylinder OD (5.75 inches from the end).

5. Bonding of Outer Cylinder/Trunnion Assembly

Bonding operations of the outer cylinder/trunnion assembly (Figure 50) were performed using acceptable techniques which were proven satisfactory on previous structures. Prior to bonding, all bond surfaces were degreased with methyl-ethyl-ketone (MEK), air dried, thoroughly abraded with 200 grit cloth, degreased again, and again air dried. Quantities of EA 9309 adhesive were mixed as required. Both bond surfaces were coated with the adhesive mixture before being slipped into position. Excess adhesive was wiped away with MEK-soaked rags. Bond line thicknesses were in the range of 0.005 to 0.010 inch. All operations were conducted at room temperature.

Special bond fixtures were not required. However, bonding was performed on a surface table using standard measuring instruments, lengths of round bar stock, support plugs, clamps, etc. The schematic shown in Figure 51 (centerline of outer cylinder is parallel to surface table) was used to locate the side brace attachment and torque arm attachment. Positions of all components were verified before the adhesive began to set up. The assembly was cured a minimum of 48 hours at room temperature before it was distributed. The sequences of the various bond operations are summarized below.

Bonding started with installation of the three gussets inside the trunnion, as shown in Figure 52. After the adhesive cured, the three gussets were bored in line with the ID of the outer cylinder so they would accept the inner sleeve.

Prior to bonding the inner sleeve, an aluminum plug with an O-ring in place was pressed into the top end of the cylinder bore until it hit the internal shoulder. After all bond areas were coated, the inner sleeve was carefully slipped up through the outer cylinder until the lower end was flush with the internal recessed shoulder of the outer cylinder. (See Figure 53.)

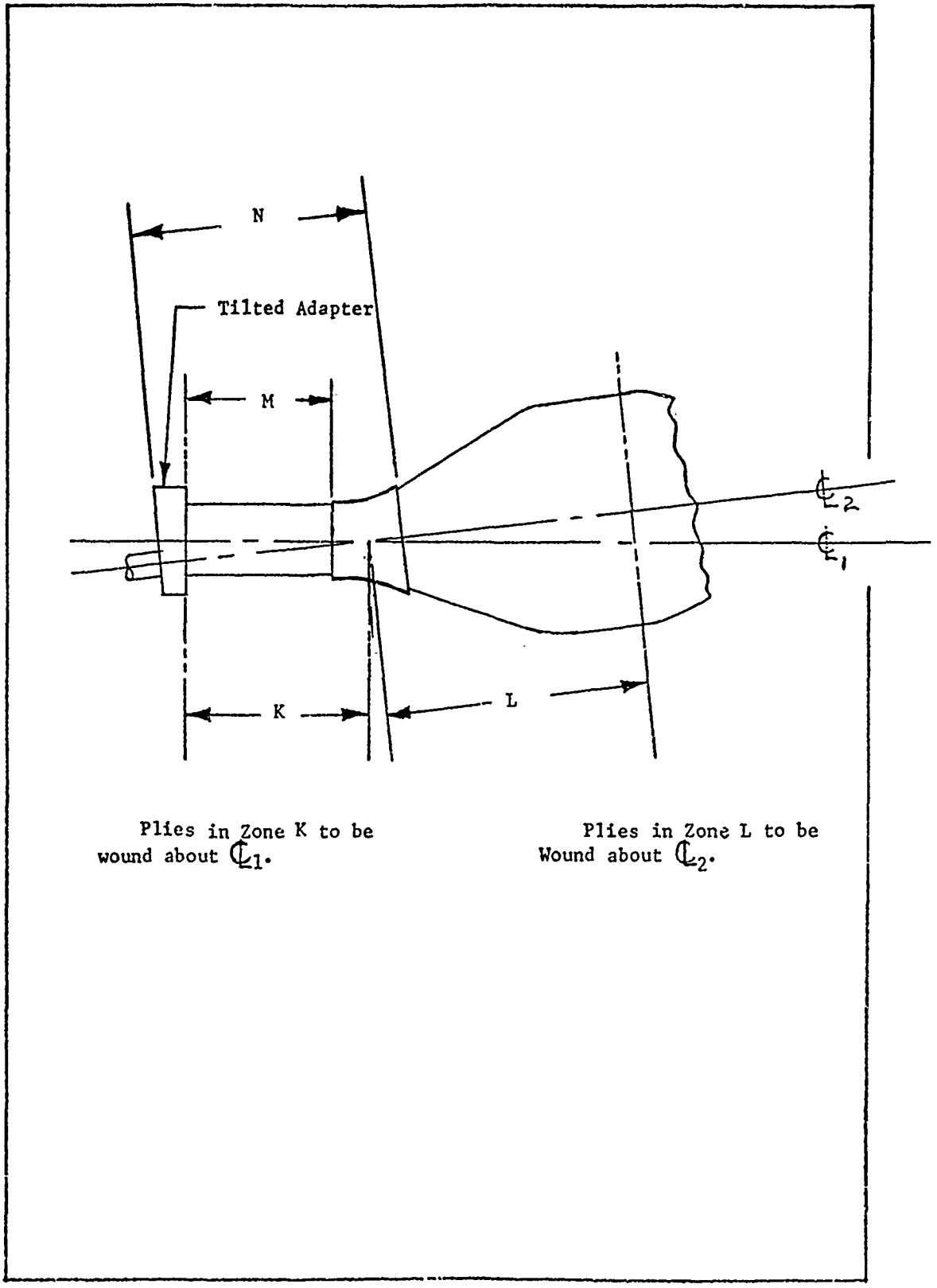

Figure 47. Trunnion Layup Detail for Reinforcement Plies

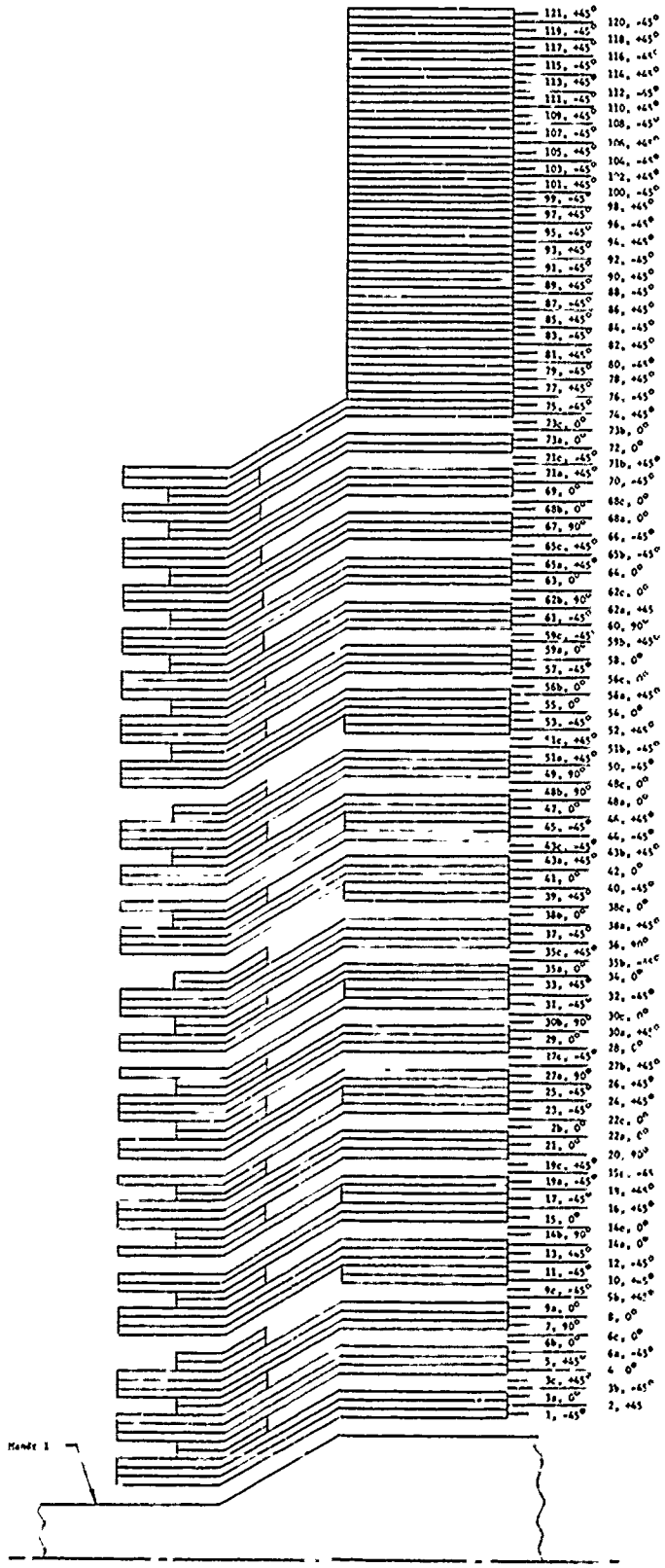

Figure 48. Trunnion Layup Sequence for Third Design

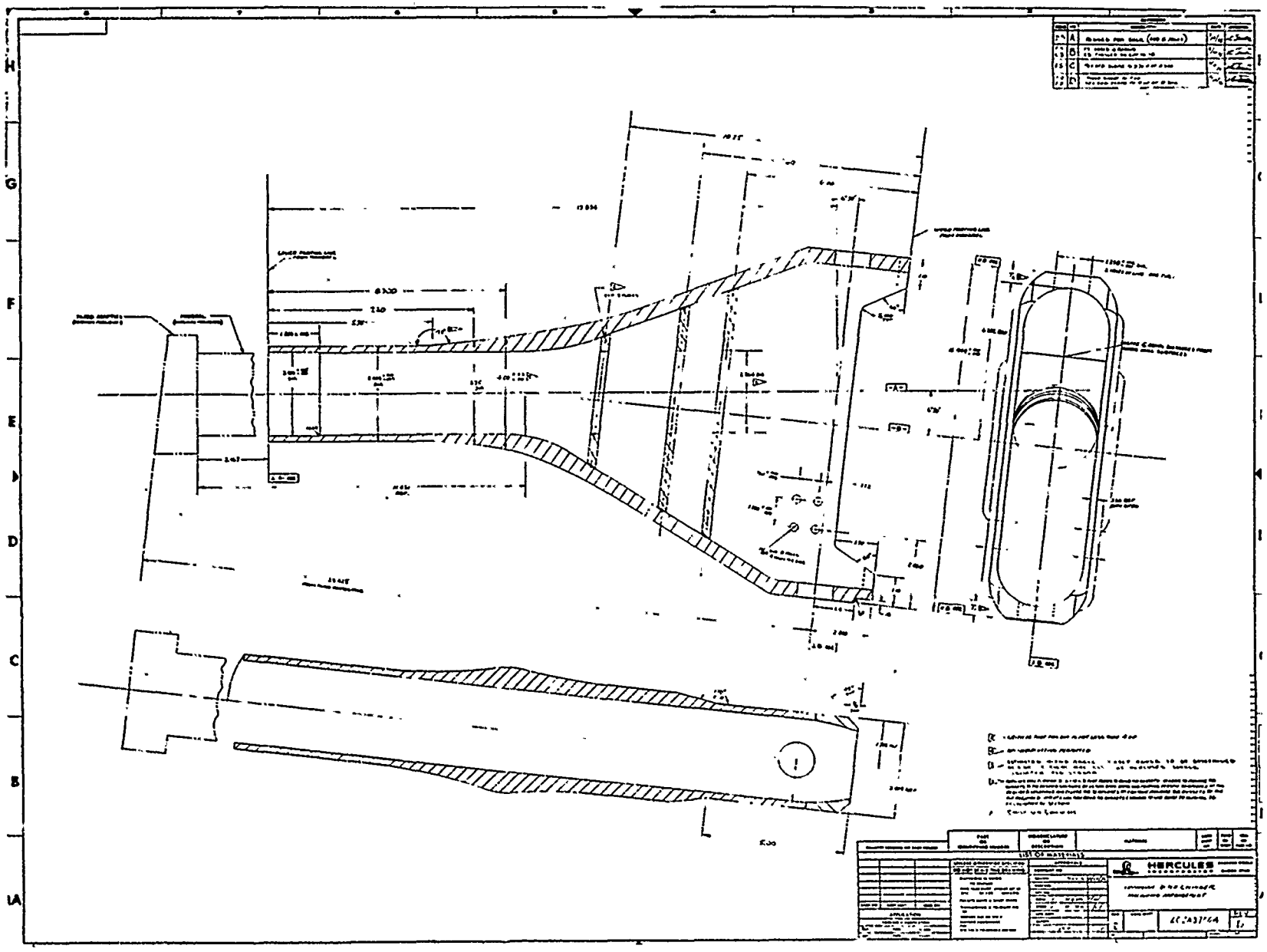

Figure 49. Third Design Machined Configuration (Drawing LCJA37004, Rev D)

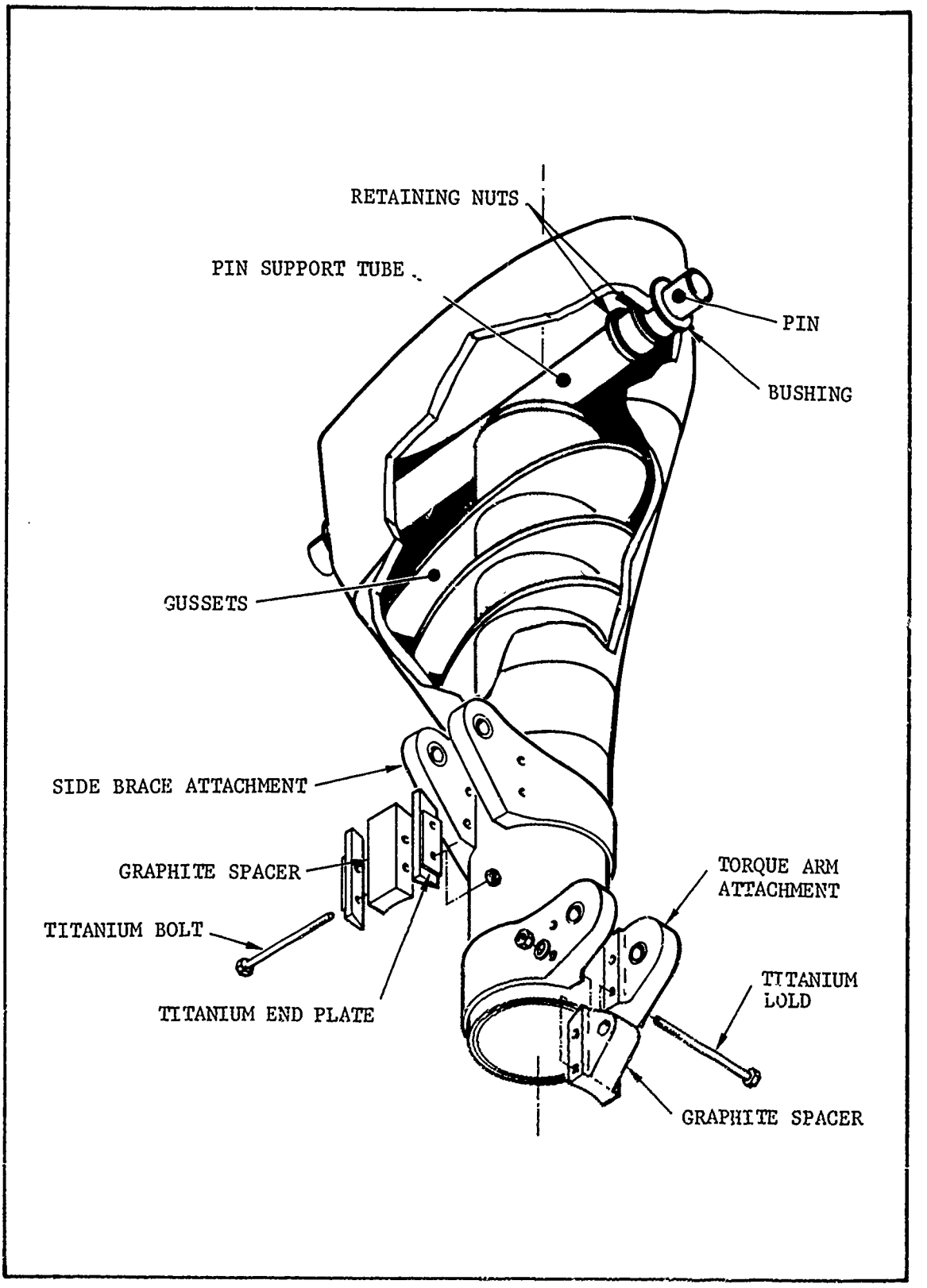

Figure 50. Outer Cylinder/Trunnion

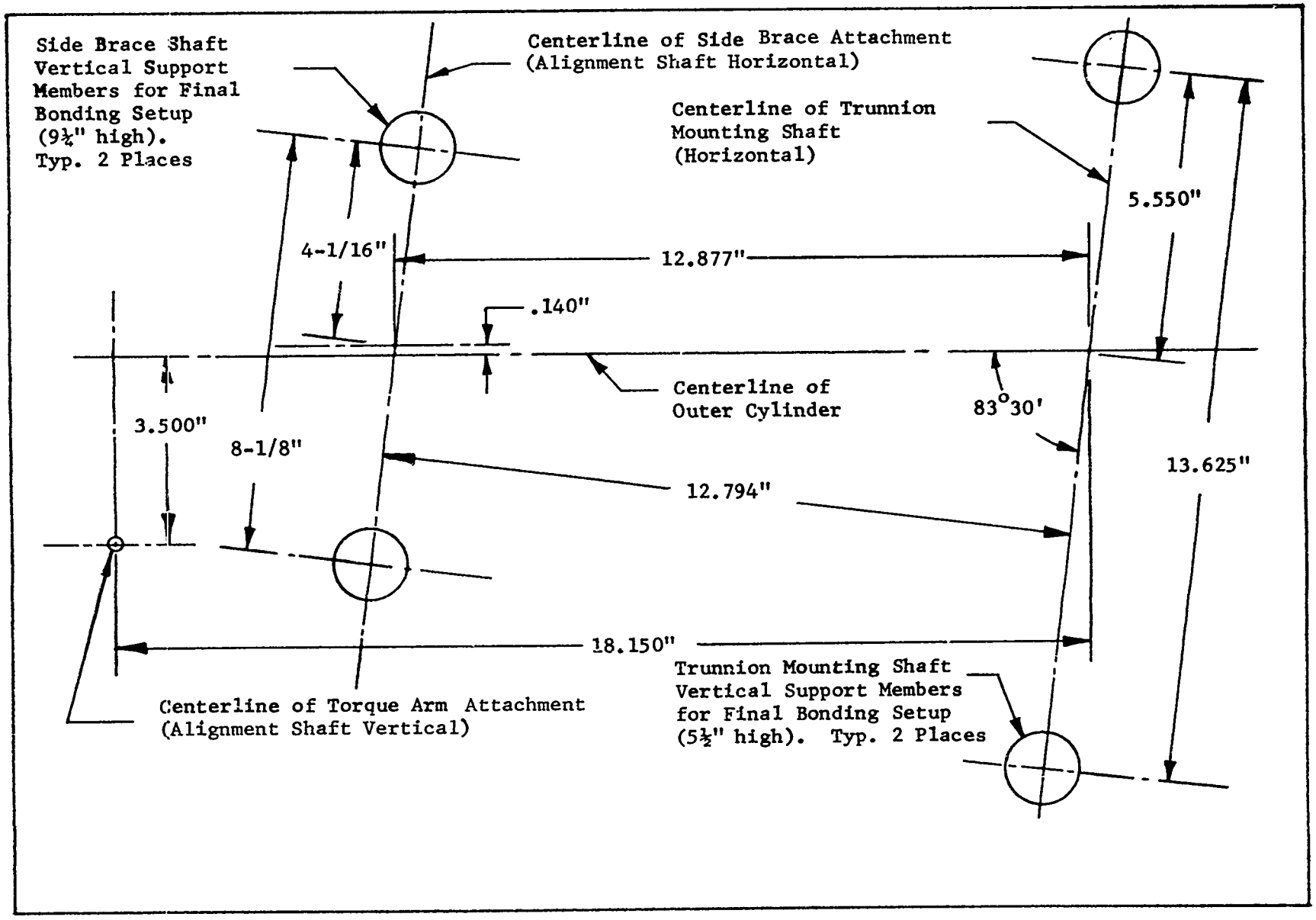

Figure 51. Final Assembly Bonding Arrangement, A37B Landing Gear

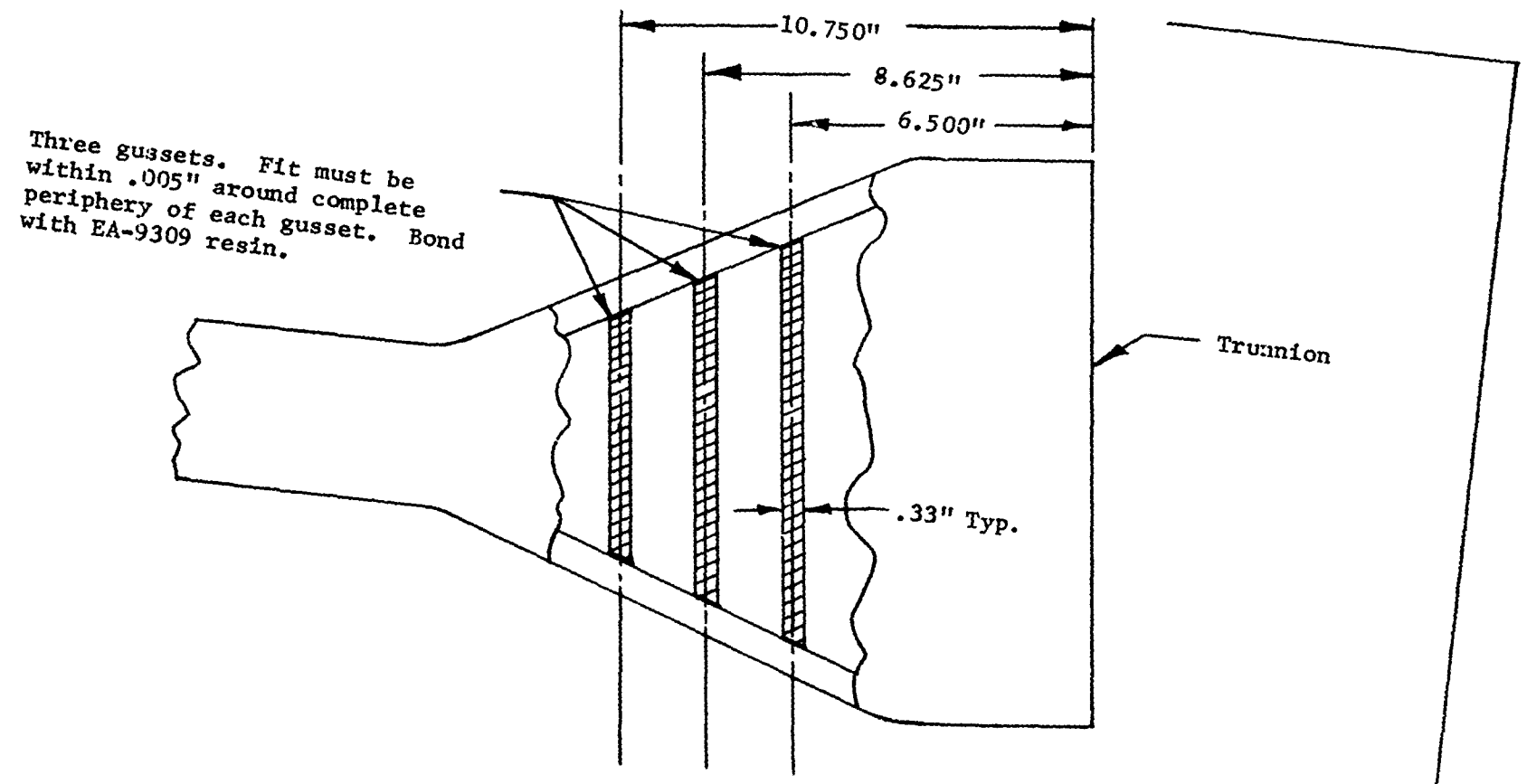

Figure 52. Trunnion Gusset Location Detail

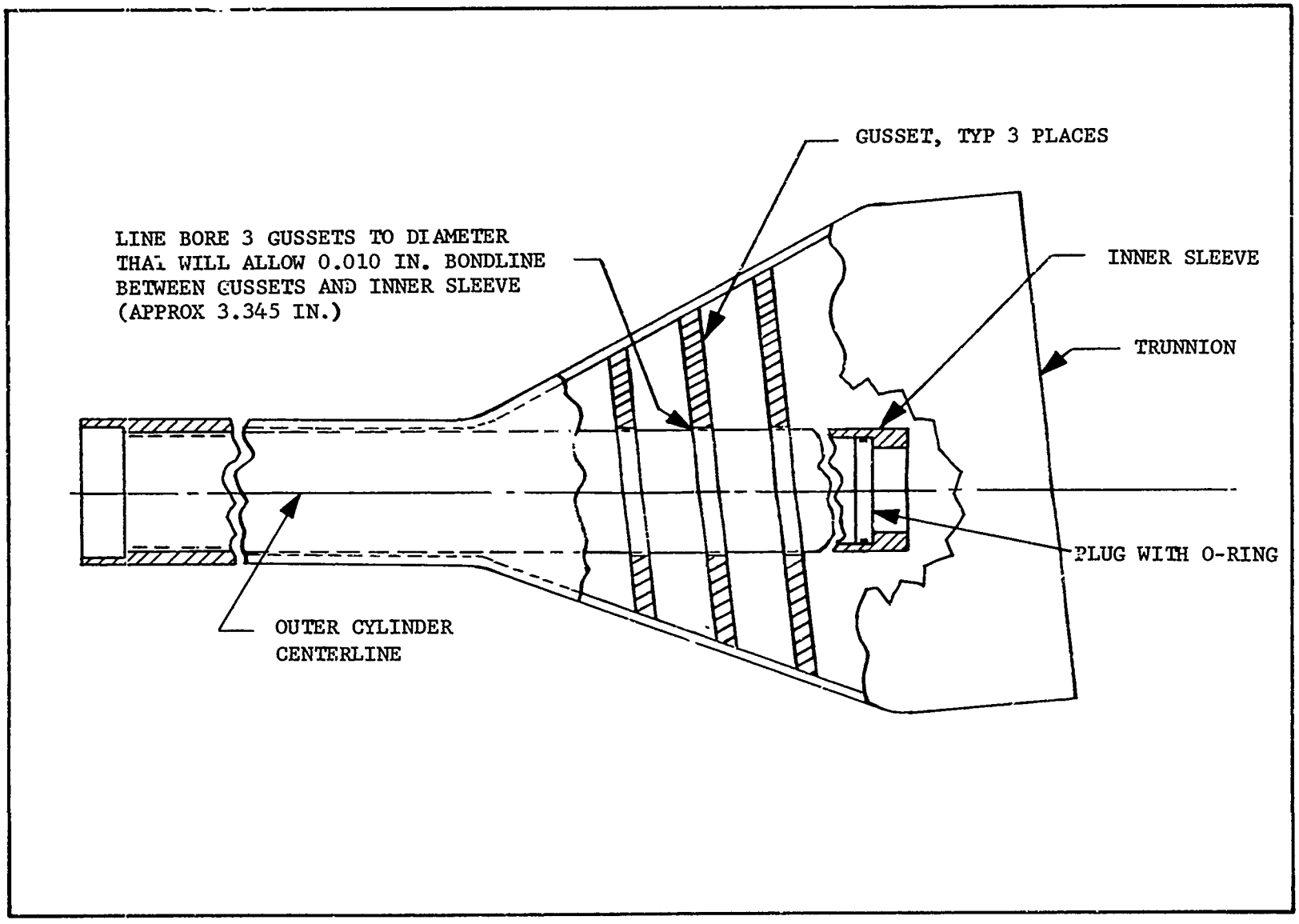

Figure 53. Trunnion Gusset Bore Detail

The thin steel pin support tube (Figure 54) was installed with adhesive in the bond areas. Turning the retaining nut up locked the tube securely in place.

Side brace attachment bonding was started by inserting the small bushings into the holes. Next, the attachment was positioned approximately on the upper portion of the outer cylinder. A round bar was put through the two bushings, and the spacer block was slid into place. Final positioning was done in accordance with Figure 51. After the outer spacers, end plates, bolts, etc. were installed, the nuts were torqued to 180 inch-lb.

Bushings for the torque arm attachment were inserted into the holes. The attachment was positioned approximately on the lower end and flush with the end of the outer cylinder. Next, a round bar was put through the two bushings, and the spacer block was positioned between the lugs. Final location was determined as shown in Figure 51. The hardware was then installed, and the nuts were torqued to 120 inch-lb.

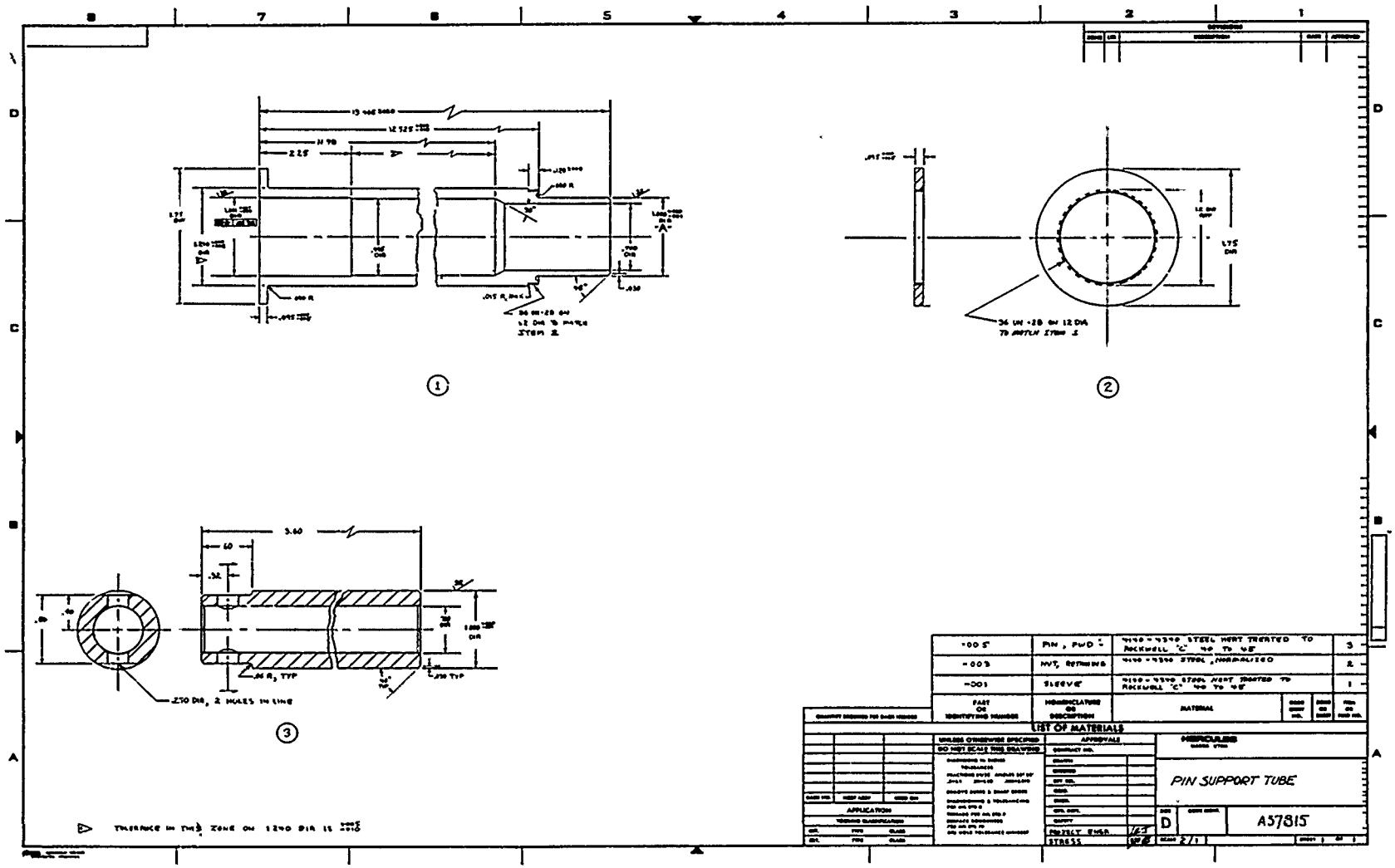

Figure 54. Pin Support Tube, Drawing A37B15

SECTION IV

TESTING

The only subcomponent parts tested were one composite torque arm attachment and one side brace attachment. Static load tests were performed at Hercules, Bacchus Works on these components to ensure design adequacy prior to assembly of the first outer cylinder/trunnion structure.

The full assembly static tests were performed on the assembled landing gear mounted in an A37B test wing at Cessna Aircraft, Wichita, Kansas. Assembly number one was load tested, assembly number two was retracted and load tested, and assembly number three was load tested. The fourth and final structure was delivered to the Air Force for drop tests.

A. TORQUE ARM ATTACHMENT STATIC TEST

The test fixture used is described in Figure 55. A torque arm attachment was bonded to the T439-003 tube using the same procedure described for the final assembly of the landing gear. The test arrangement is shown in Figure 56. The point of load application is a downward force (F) at the spherical lug at the end of the metal torque arm.

The torque arm attachment was loaded geometrically to its most critical condition during landing. This is a tail-down landing springback load of [illegible] pounds, with the torque arm located at an angle of 42° as shown in Figure 57. The test was performed using a 200,000 pound Baldwin testing machine.

The test plan followed the squence of: load torque arm attachment (machine stroke down) to 2375 ± 50 pounds, hold for 5 seconds, then to 4750 ± 50 pounds, hold for 5 seconds, then to 6365 ± 50 pounds, hold for 5 seconds, then to 9500 ± 50 pounds, hold for 5 seconds, then to 11,875 ± 50 pounds, hold for 5 seconds. If the part has not failed at 11,875 pounds, stop the test.

The actual test was as follows: all loading conditions were the same as the plan except that at 11,600 pounds a dowel pin sheared in the test fixture (Figure 56), and the test was stopped. The 11,600 pound load at which the test was stopped was 119 percent of the ultimate load of 9700 pounds.

The test results showed that the design of the torque arm attachment was adequate for use in the final assembled gear.

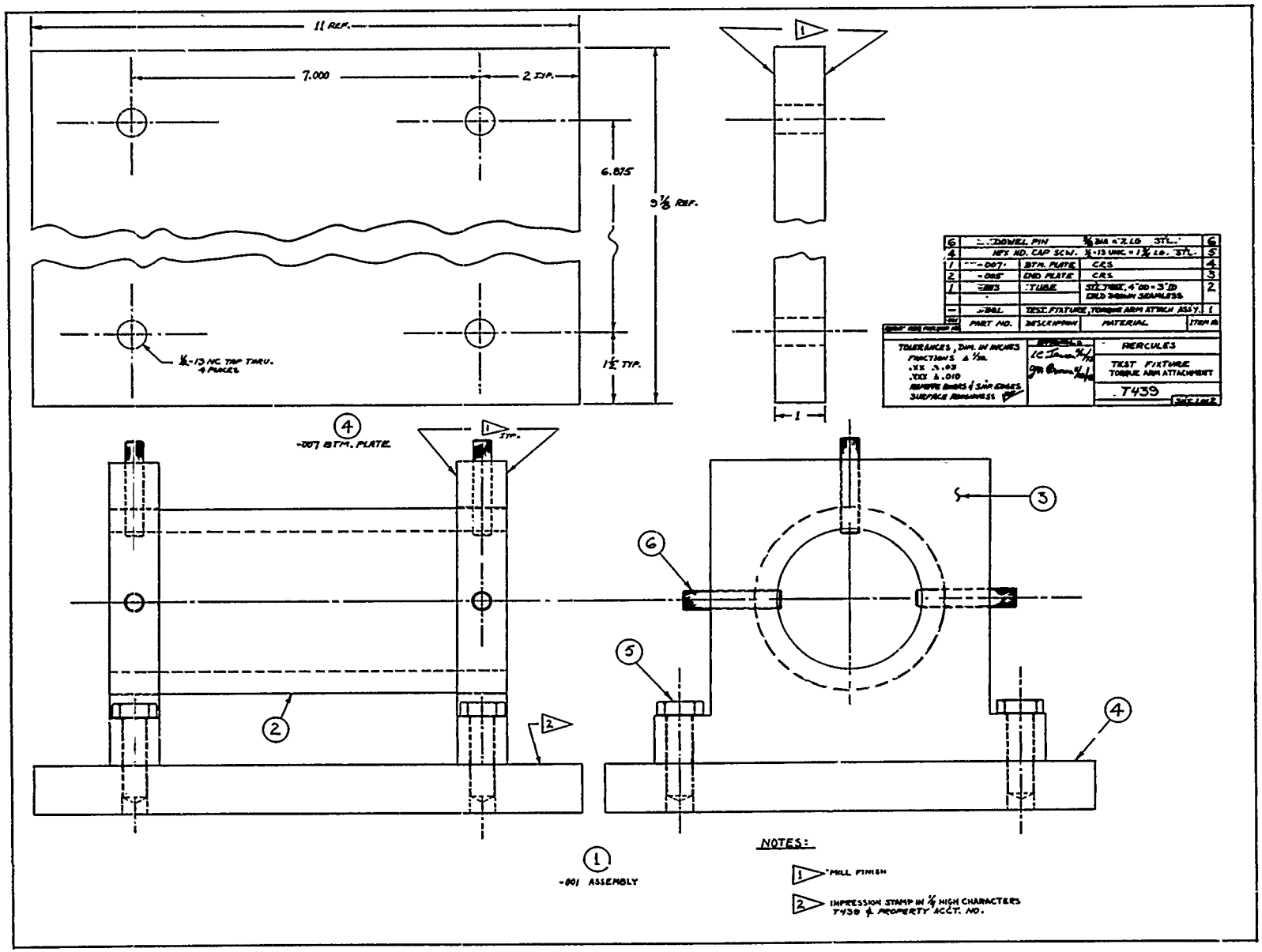

Figure 55. Torque Arm Attachment Test Fixture, Sheet 1 of 2

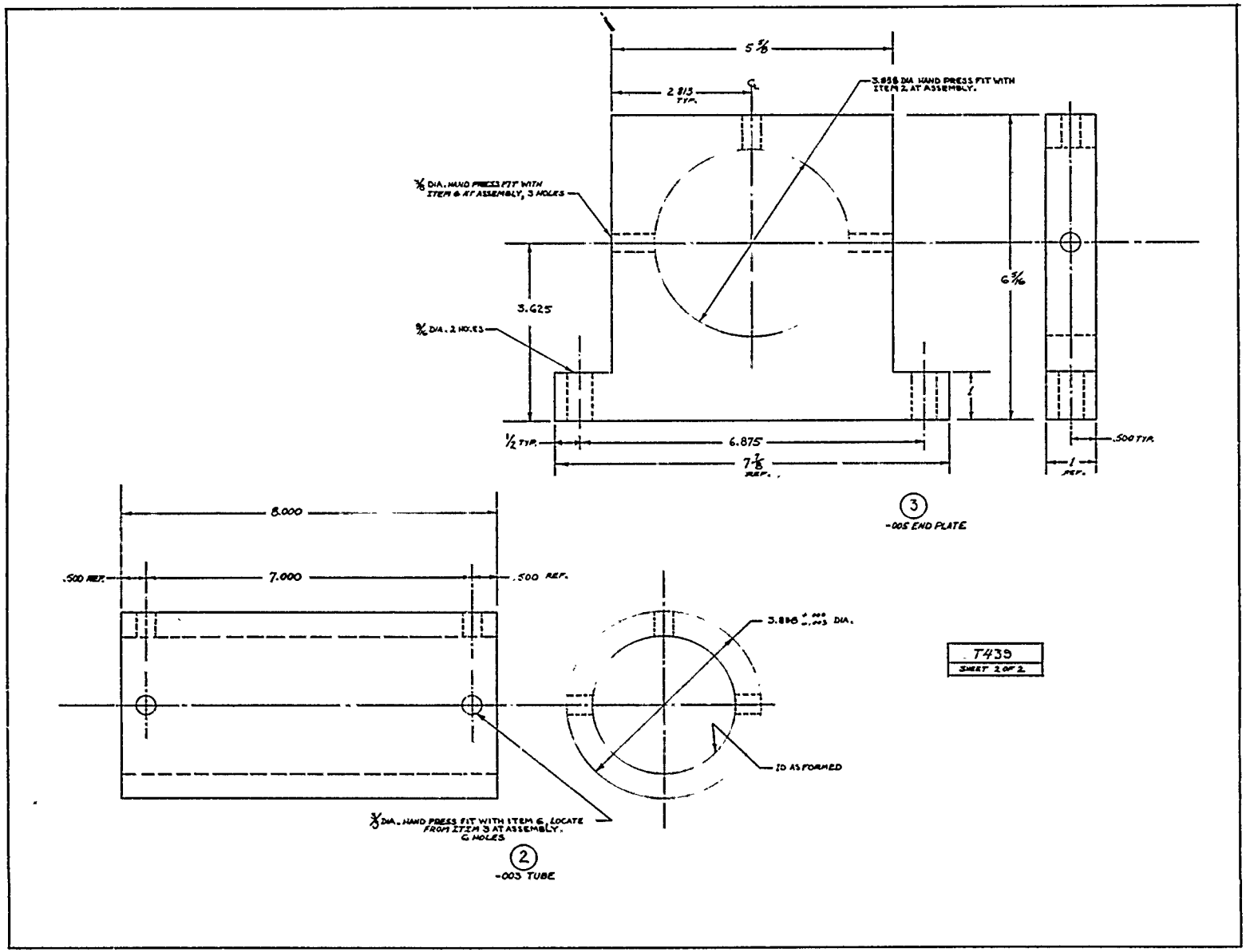

Figure 55. Torque Arm Attachment Test Fixture, Sheet 2 of 2

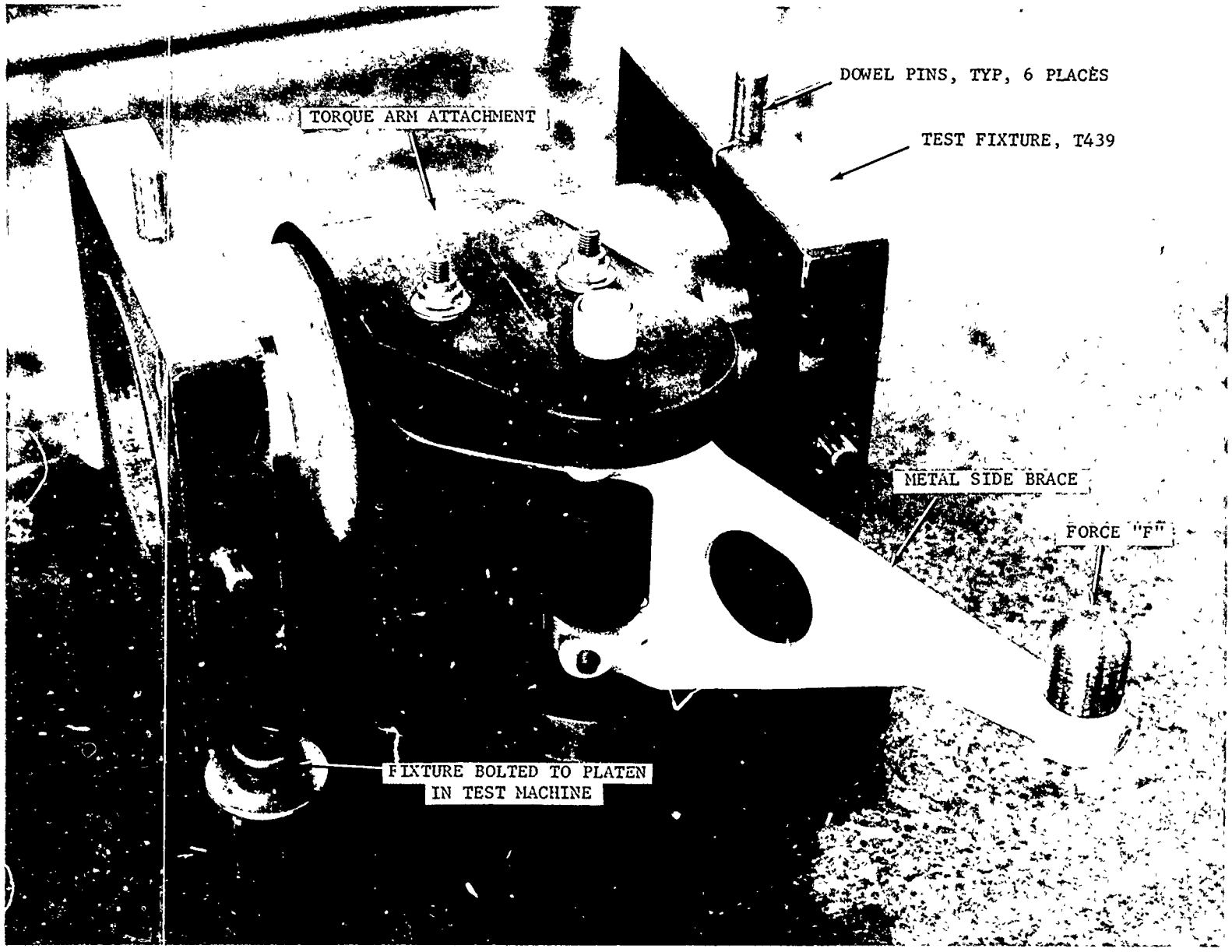

Figure 56. Torque Arm Attachment Test Arrangement

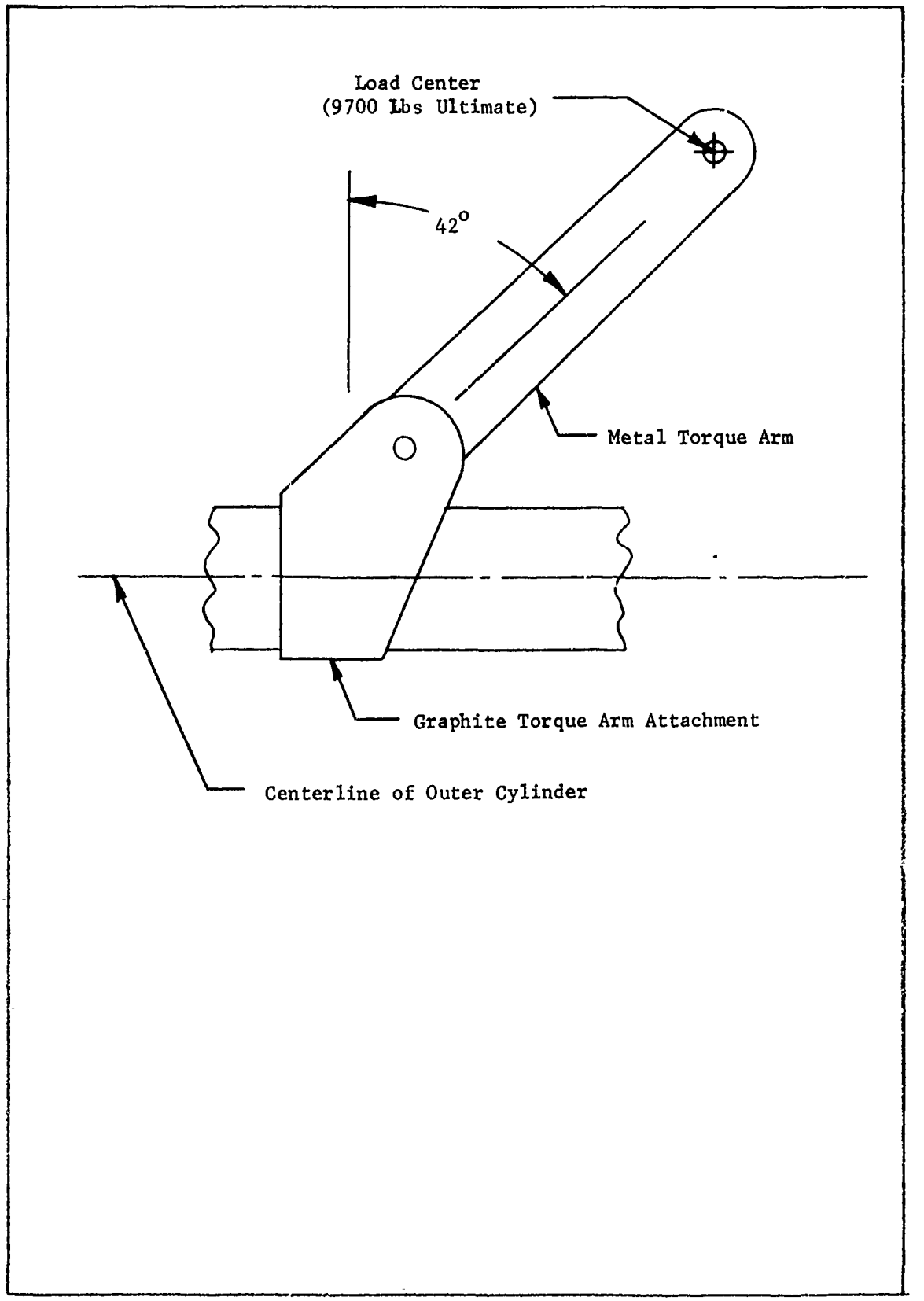

Figure 57. Critical Loading Condition for Torque Arm Attachment

B. SIDE BRACE ATTACHMENT STATIC TEST

The test fixture used is described in Drawing T445. (See Figure 58.) The side brace attachment was bonded to the T445-005 stem using the same procedure described for the final assembly of the landing gear. The test arrangement is shown in Figure 59 for tension and Figure 60 for compression.

The side brace attachment was loaded geometrically at its most critical condition in tension, 11,619 pounds (drift landing, right), and its most critical condition in compression, 29,306 pounds (right turn), with the load applied as shown in Figure 61.

The test was performed using a 200,000 pound Baldwin testing machine. The test plan was as follows:

(1) Tension (first) - load to 3450 ± 50 pounds, hold for 5 seconds, then to 6900 ± 50 pounds, hold for 5 seconds, then to 9250 ± 50 pounds, hold for 5 seconds, then to 13,850 ± 50 pounds, hold for 5 seconds, then stop the test.

(2) Compression (second) - Load to 7450 ± 50 pounds, hold for 5 seconds, then to 14,900 ± 50 pounds, hold for 5 seconds, then to 20,000 ± 50 pounds, hold for 5 seconds, then to 29,850 ± 50 pounds, hold for 5 seconds, then to 37,750 ± 50 pounds, hold for 5 seconds. If the part has not failed at 35,750 pounds, stop the test.

The actual test was as follows:

(1) Tension (first) - All loading conditions were the same as the plan. The 13,850 pound load at which the test was stopped was 119 percent of the ultimate load of 11,619 pounds.

(2) Compression (second) - All loading conditions were the same, except that at 33,525 pounds the resin bond failed between the side brace attachment and the stem (Figure 60), and the test was stopped. The 33,525 pound load at which the bond failed was 114 percent of the ultimate load of 29,306 pounds.

The test results showed that the design of the side brace attachment was adequate for use in the final assembly gear.

C. LANDING GEAR TESTS AT CESSNA AIRCRAFT

The load test program for the graphite composite A37B landing gear had two objectives. The first was to demonstrate the capability of the lighter-weight graphite/epoxy main landing gear to withstand 100 percent limit design load in each of three loading conditions without permanent deformation or failure. The second objective was to demonstrate that the same gear would have the capability to withstand ultimate (150 percent of limit) design loads in each loading condition without failure.

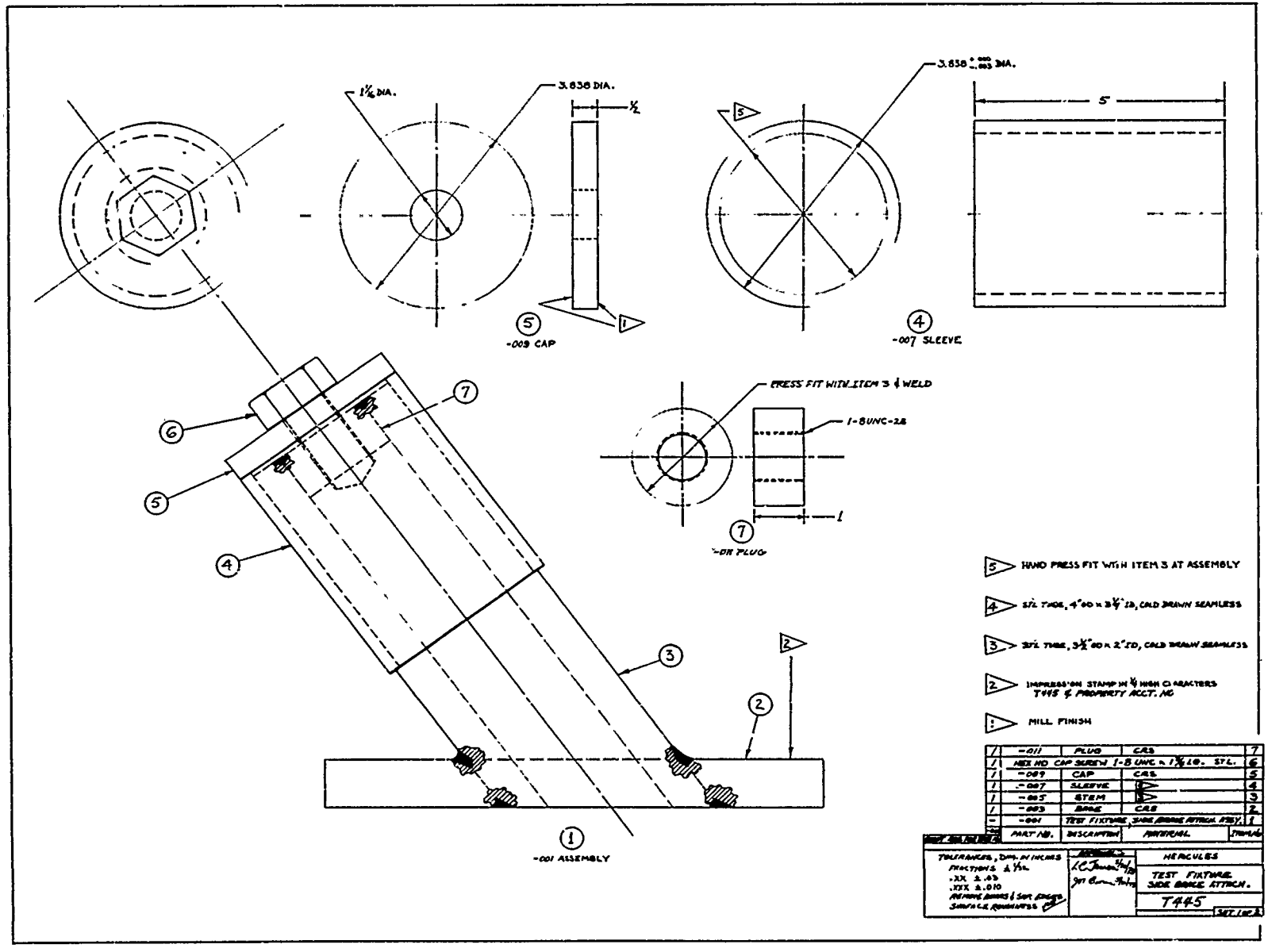

Figure 58. Side Brace Attachment Test Fixture, Sheet 1 of 2

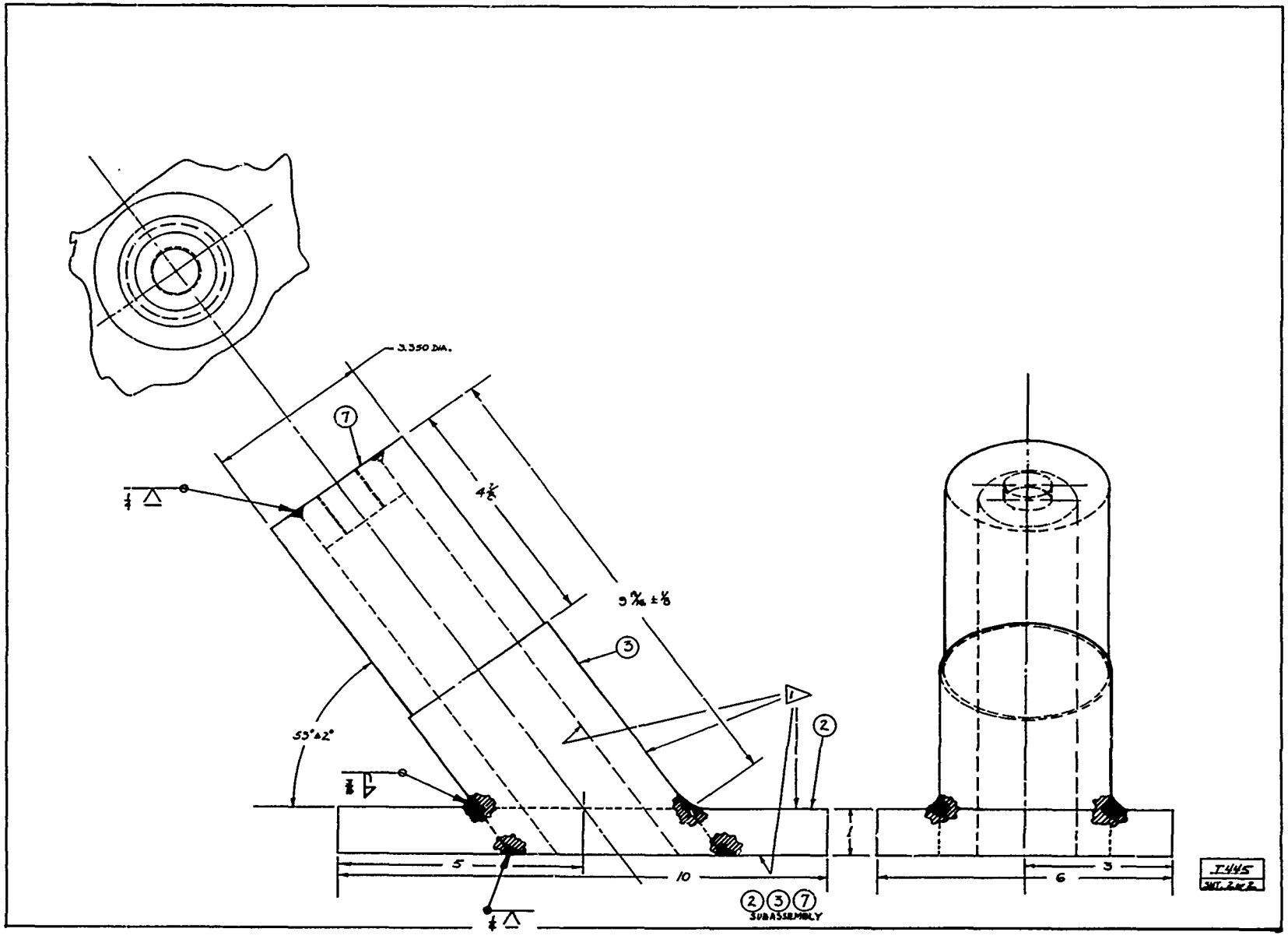

Figure 58. Side Brace Attachment Test Fixture, Sheet 2 of 2

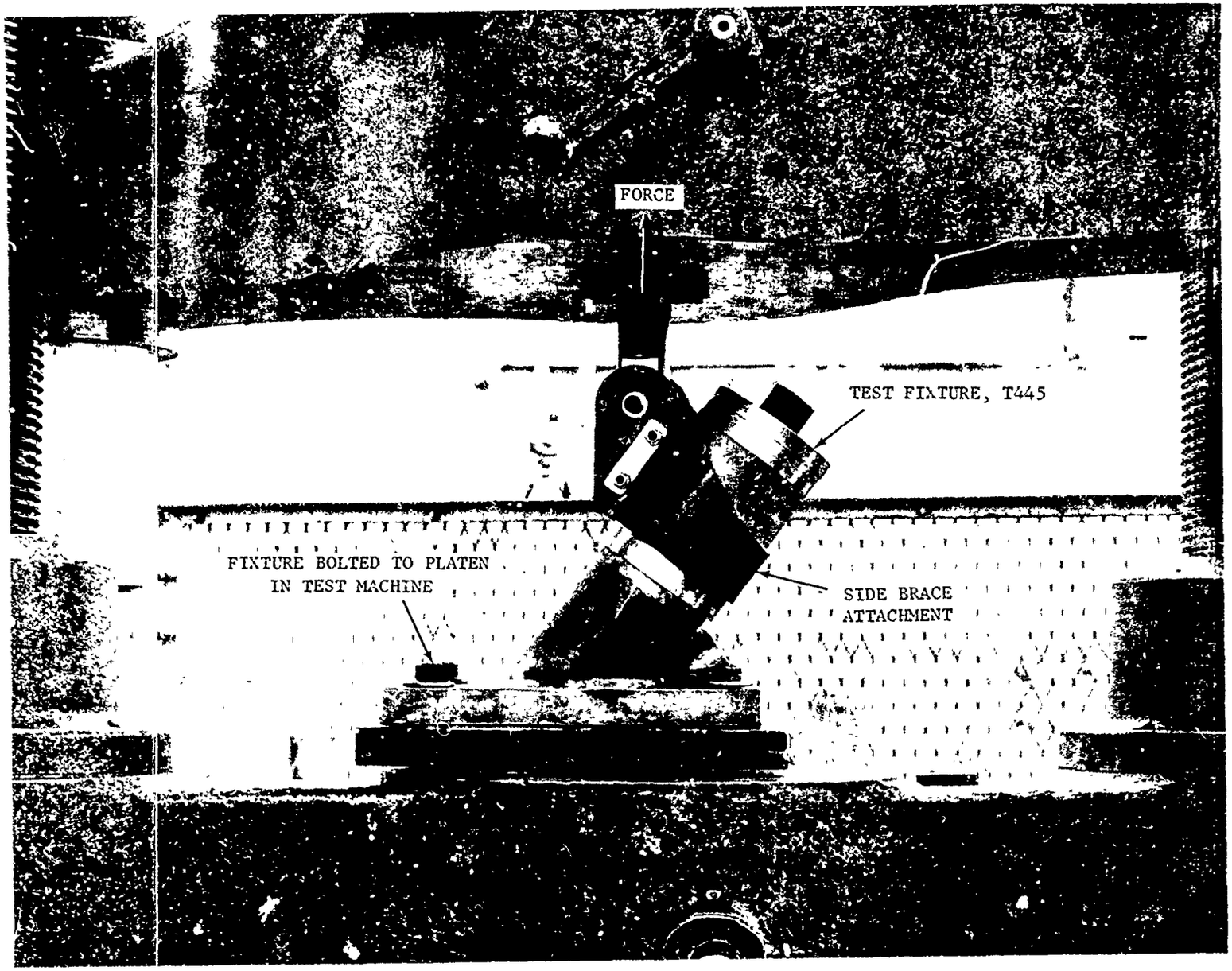

Figure 59. Side Brace Attachment Tension Test Arrangement

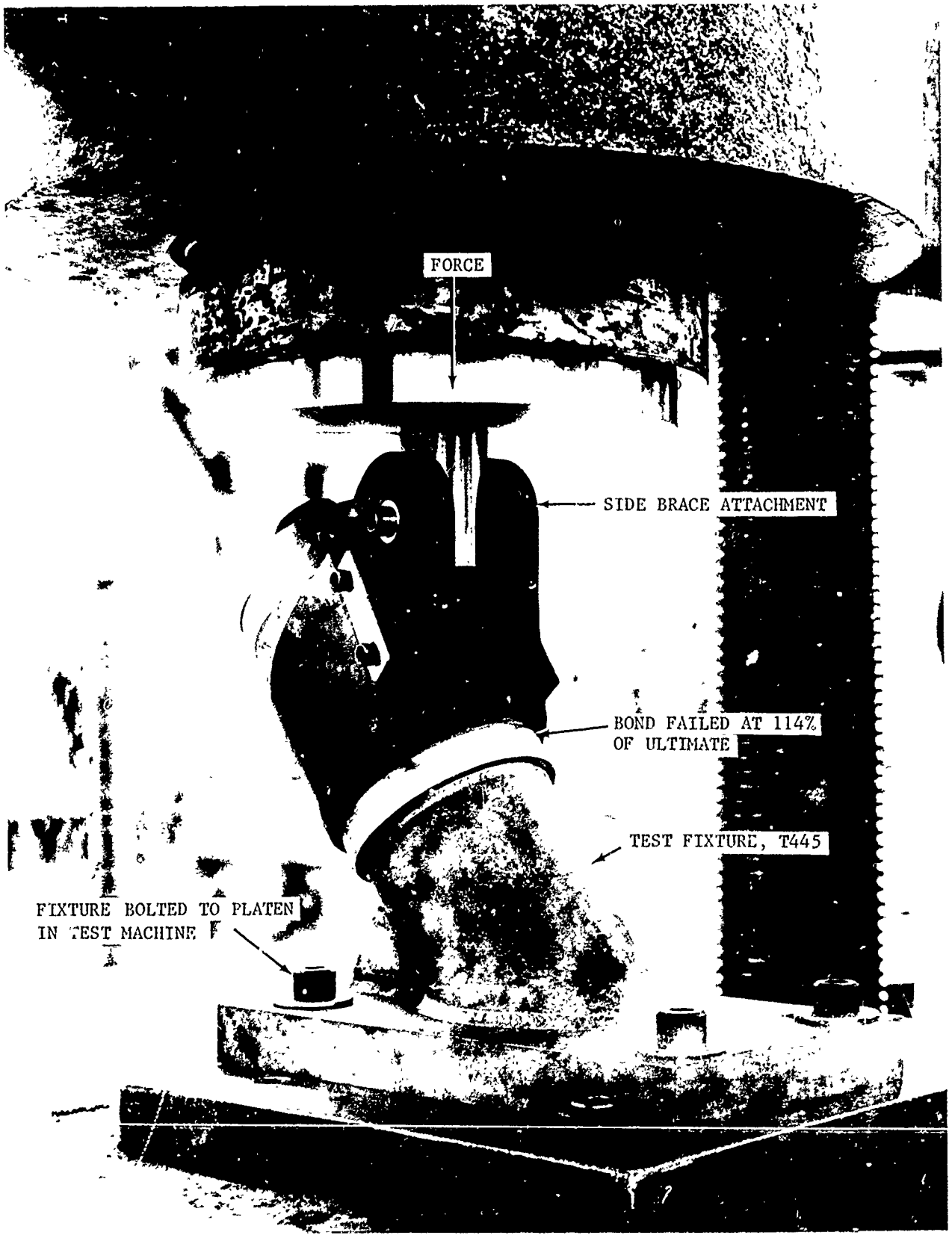

Figure 60. Side Brace Attachment Compression Test Arrangement

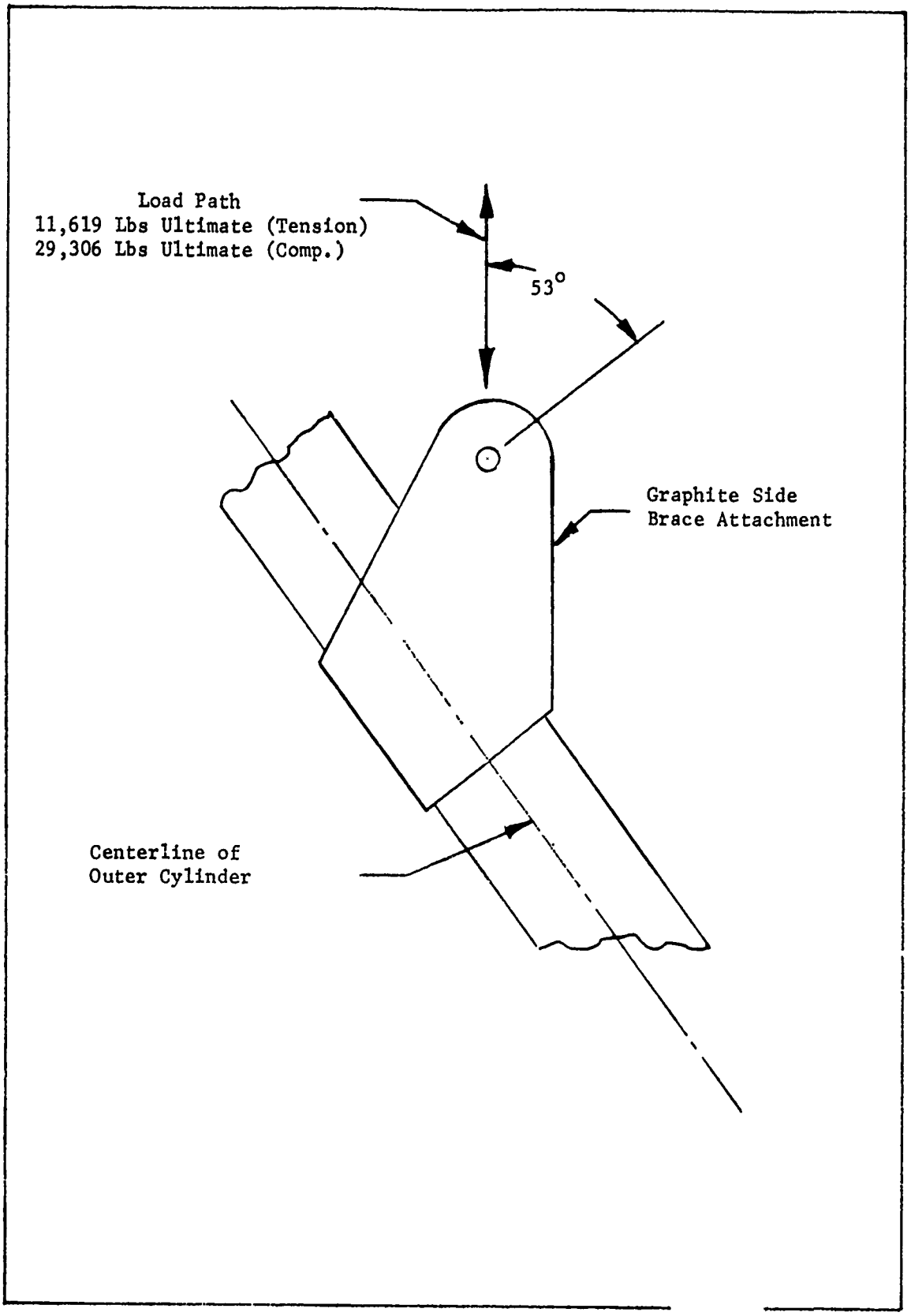

Figure 61. Critical Loading Condition for Side B. achment

Each of the landing gear structures was completely assembled prior to being sent to Cessna. On the first assembly, a test piston and upper bearing assembly were fabricated by Hercules; the axle assembly and two torque arms were furnished by AFFDL. A metal dummy side brace was installed on the gear for load tests. The wing-holding fixture was cantilevered in a level landing orientation from rigid columns. Instrumentation, setup, testing, and test reporting were performed by Cessna Aircraft personnel. Strain and load cell data were permanently recorded during each test. Loads were maintained for a minimum of 3 seconds.

The test descriptions are shown below:

Load Description	Test Description	Condition Number	Level Substantiated % Limit Load
Outboard Side Load	Pdr	Condition 1	100 and 150
Inboard Side Load	Pdℓ	Condition 2	100 and 150
Landing with Forward Drag Load	Prb	Condition 3	100 and 150

Load directions for the three conditions are shown in Figure 62.

While each load increment was being imposed (3 seconds minimum) on the gear, test personnel were also monitoring acoustic levels for any sign of change in structural integrity. When the load was released after each step, the structure under test was carefully examined visually for any potential signs of failure.

Complete detailed test reports for each of the three assemblies are on file at AFFML. Summaries of these tests are presented below.

1. Test Results of First Design

The load schedule for limit load testing is presented in Table 10, and the schedule for 150 limit load testing is shown in Table 11.

The first graphite/epoxy landing gear design successfully withstood 100 percent of limit load and 150 percent of limit load testing in all respects. However, examination of the wing disclosed a crack and buckling of the aluminum in the forward bulkhead in the wheel well. This wing damage occurred during testing at maximum forward drag load, Condition 3 (Prb). Figure 63 shows the test setup.

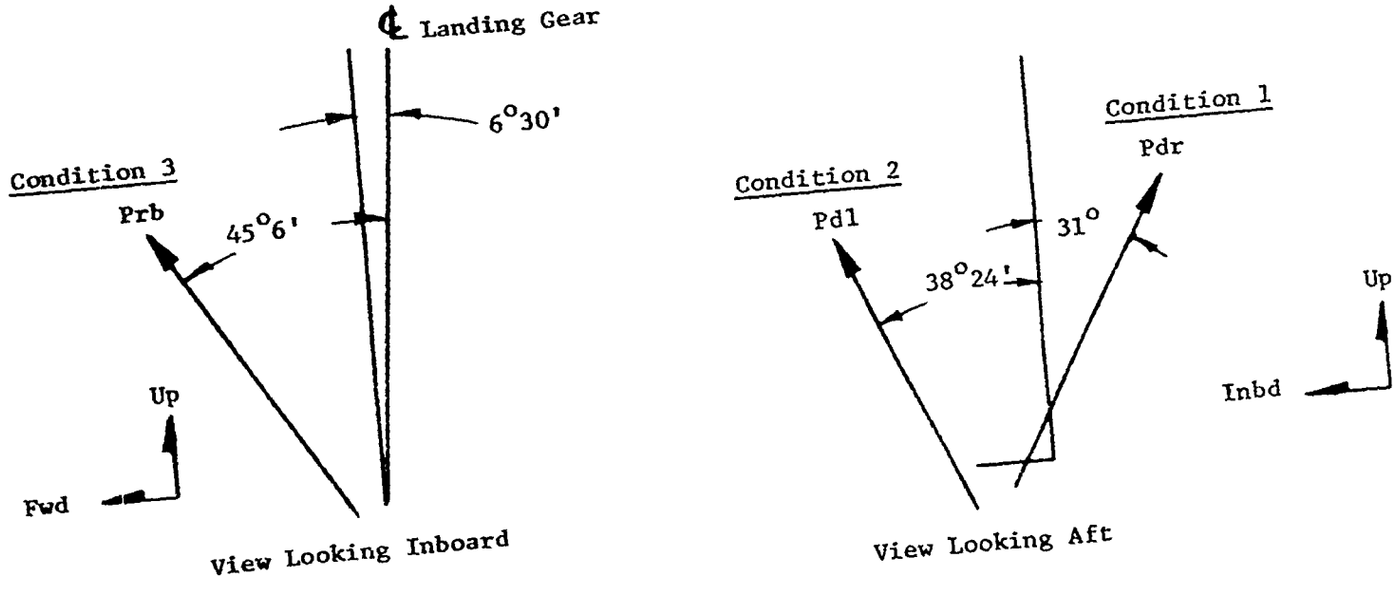

Figure 62. Load Directions for the Three Test Conditions

TABLE 10

LOAD SCHEDULE FOR LIMIT STRENGTH TEST

Loading Sequence	Condition No.	Piston* Stroke In.	Load Direction	Load Lbs	Percent Limit Load	Load & Data Increments
1	1	4.0	P_{dr}	3050	50	0, 20, 40, 50, 0, 20
2	2	4.0	P_{dl}	3300	50	
3	3	6.4	P_{rb}	4500	50	
4	1	4.0	P_{dr}	4575	75	0, 20, 40, 60, 75, 0, 20
5	2	4.0	P_{dl}	4950	75	
6	3	6.4	P_{rb}	6750	75	
7	1	4.0	P_{dr}	6100	100	1, 20, 40, 60, 80, 100, 0, 20
8	2	4.0	P_{dl}	6600	100	
9	3	6.4	P_{rb}	9000	100	

* Piston stroke from fully extended

TABLE 11

LOAD SCHEDULE FOR ULTIMATE STRENGTH TEST

Loading Sequence	Condition No.	Piston* Stroke In.	Loading Direction	Load Lbs	Percent Limit Load	Load & Data Increments
1	1	4.0	P_{dr}	7625	125	0, 20, 100,
2	2	4.0	P_{dl}	8250	125	110, 120, 125,
3	3	6.4	P_{rb}	11250	125	0, 20
4	1	4.0	P_{dr}	9150	150	0, 20, 100,
5	2	4.0	P_{dl}	9900	150	110, 120, 130,
6	3	6.4	P_{rb}	13500	150	140, 150, 0, 20

* Piston stroke from fully extended

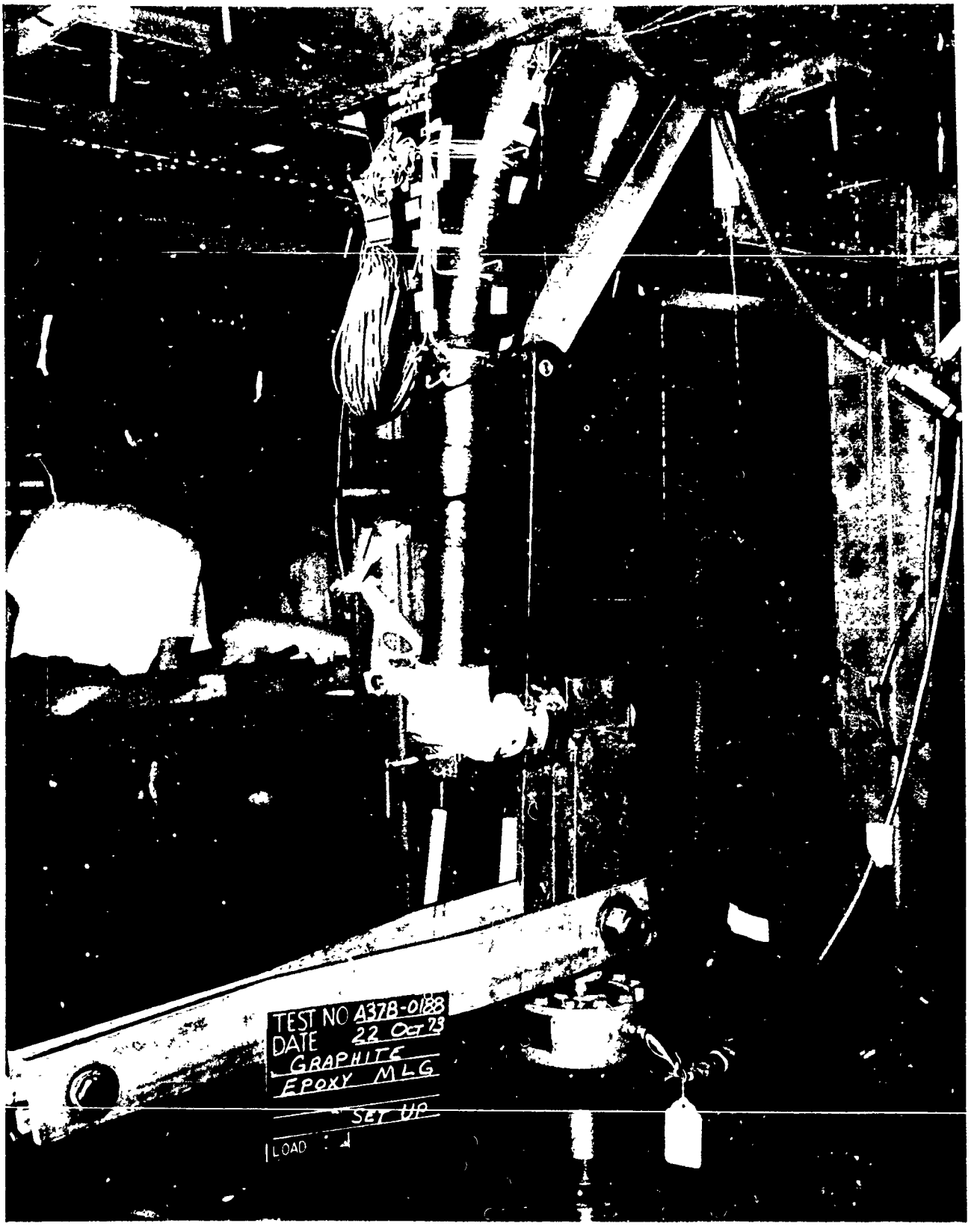

Figure 63. Landing Gear Installed in Wing Test Fixture

Figure 64 presents the strain gage location and the strains recorded during 100 percent limit load testing in Condition 3. Maximum strain was 0.44 percent under strain gage number 16. During 150 percent limit load testing, this gage again recorded the maximum strain, which was 0.533 percent of Condition 3 loading.

2. Test Results of Second Design

This outer cylinder/trunnion design was built to be retractable and included metal flight components furnished by the Air Force. An A37B production wheel and side brace assembly were installed on the gear assembly prior to retraction tests. After setup was complete on Cessna Aircraft Plane No. A37B-SN 67-14823, 10 successful retraction cycles were performed. The retracted gear sequence is shown in Figures 65 through 69. The inboard door successfully completed the closing cycle without any visual interference with the graphite composite gear assembly. However, the flight outboard door would require relocation of the attach bracket and possible redesign of the door for proper clearance with the gear.

Load testing was done in a manner identical to that performed previously on the first design. After successfully passing 100 percent limit load testing on inboard loading (Condition 1) and outboard loading (Condition 2), this gear failed at approximately 90 percent of limit load during loading with forward load (Condition 3). Failure occurred just above the side brace attachment in the outer cylinder/trunnion transition area.

3. Test Results of Modified Second Design

Another retractable graphite composite landing gear was fabricated. The major difference between this assembly and that previously constructed was that more material was added to the outer/cylinder trunnion transition area to make the change in cross section more gradual. This assembly, as did the previous assembly, used a steel torque arm attachment to reduce the envelope and permit retraction.

A dummy solid aluminum side brace was used during all test conditions except for the Condition 3 (springback) ultimate strength test. For this condition, all parties involved (Cessna/Hercules/Air Force) agreed that a greater representation of actual gear loads would be experienced by using a regular metal production side brace assembly. It was also believed that the difference in flexibility between the solid aluminum side brace and the regular production side brace would help the test gear in passing Condition 3 (springback), the most critical condition.

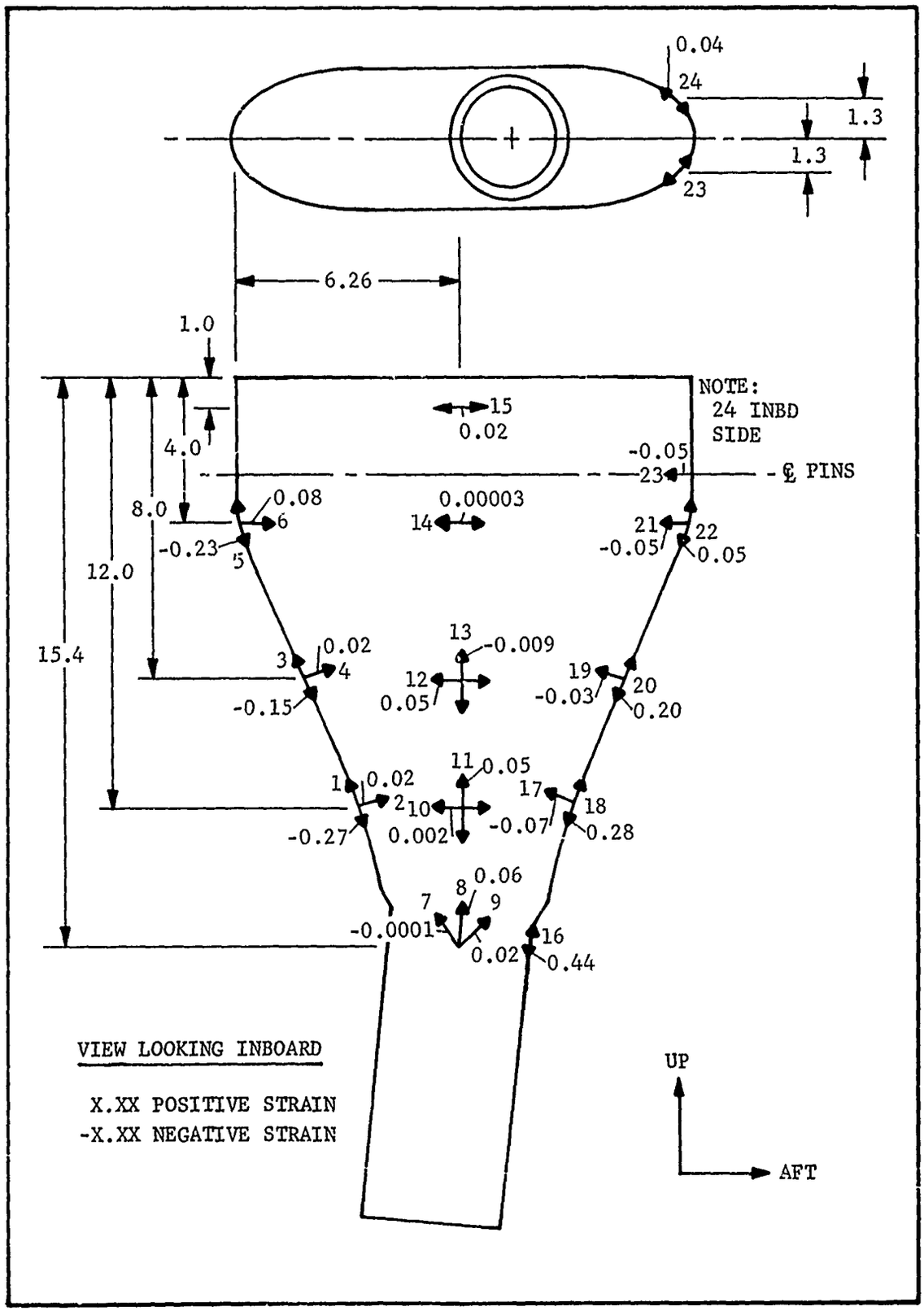

Figure 64. Strain Gage Locations, Condition 3 100% Limit Load

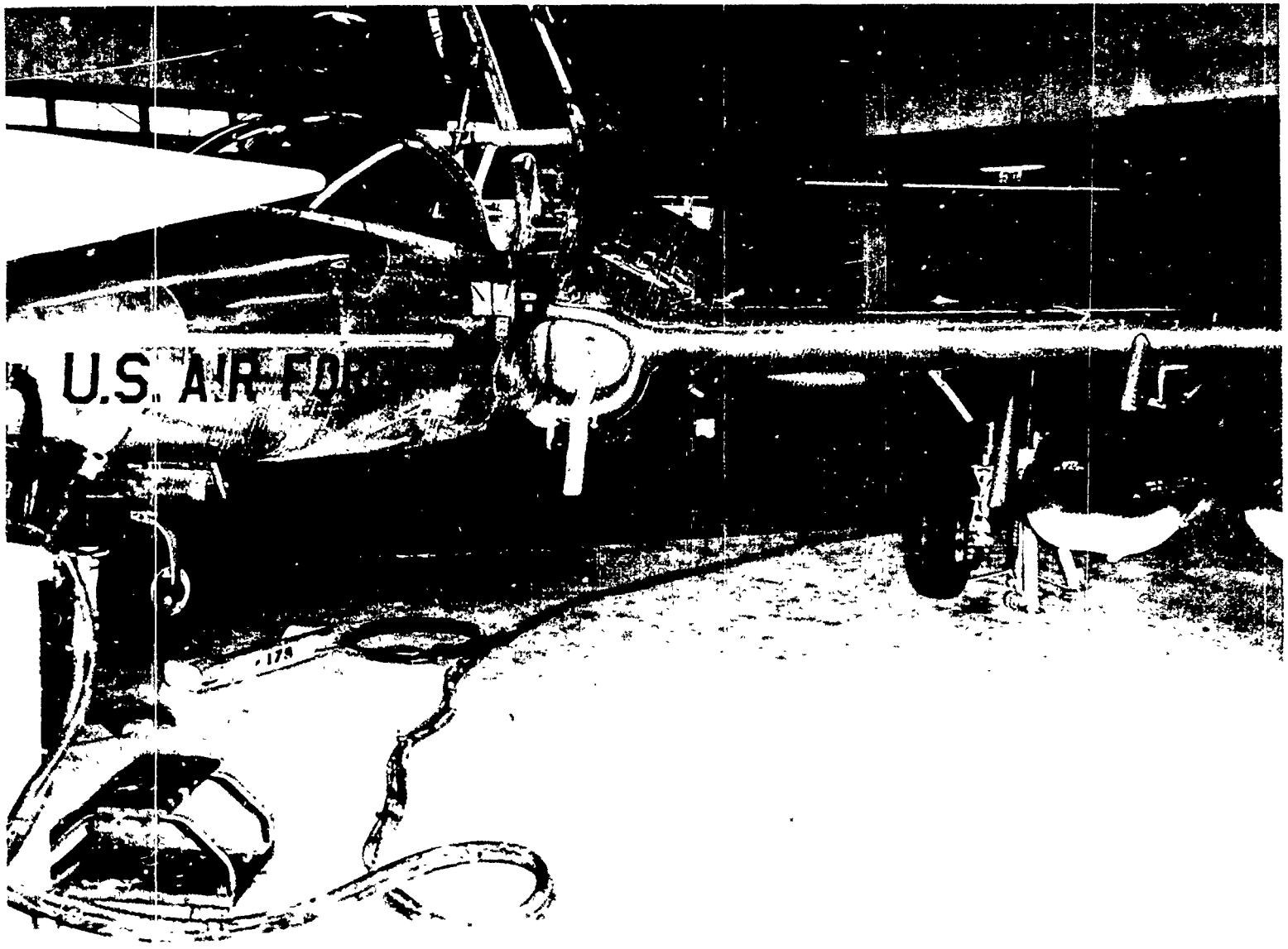

Figure 65. Retraction Test Set-up for Graphite Composite A37B Left MLG

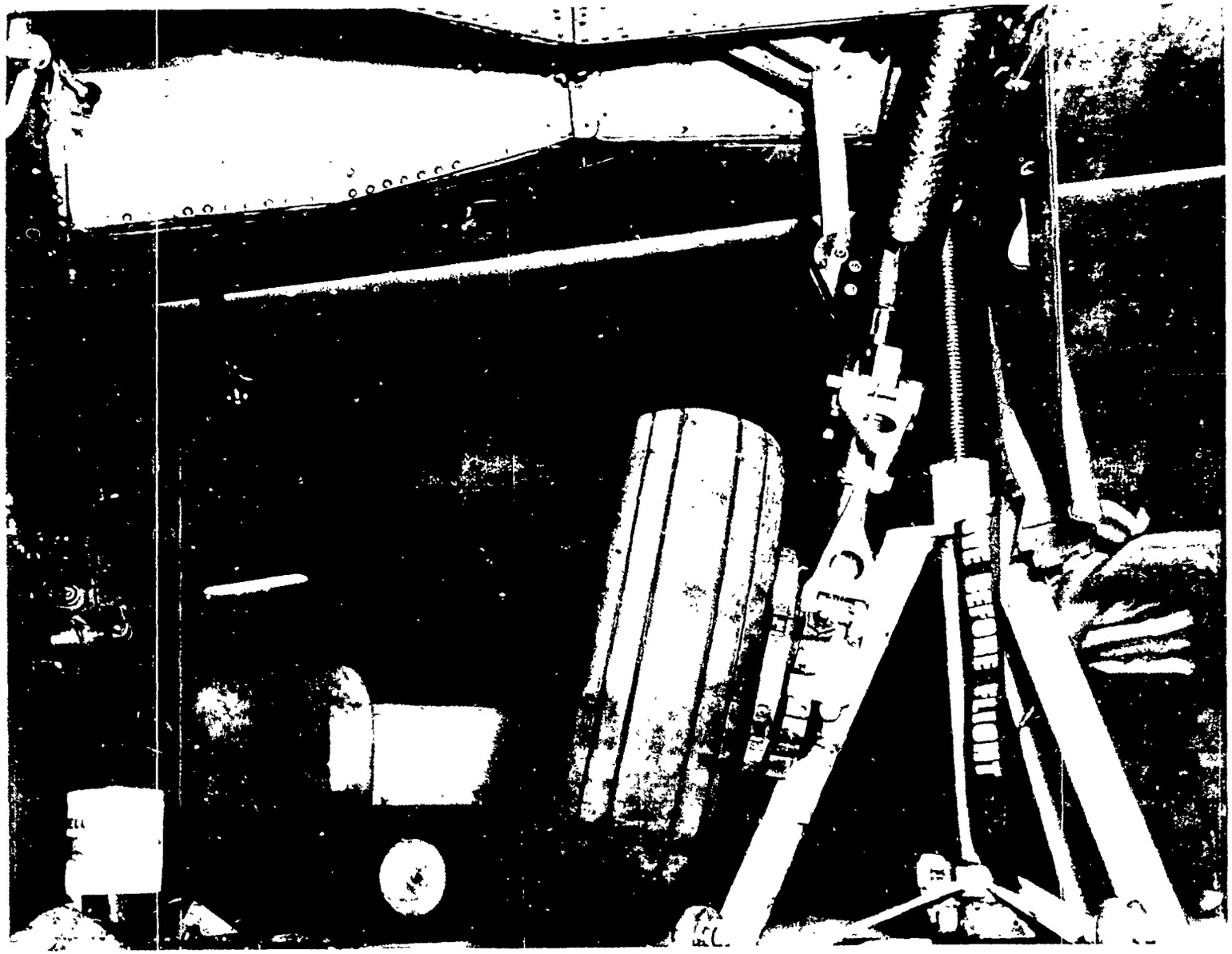

Figure 66. Graphite Composite Gear Starting Retraction Cycle

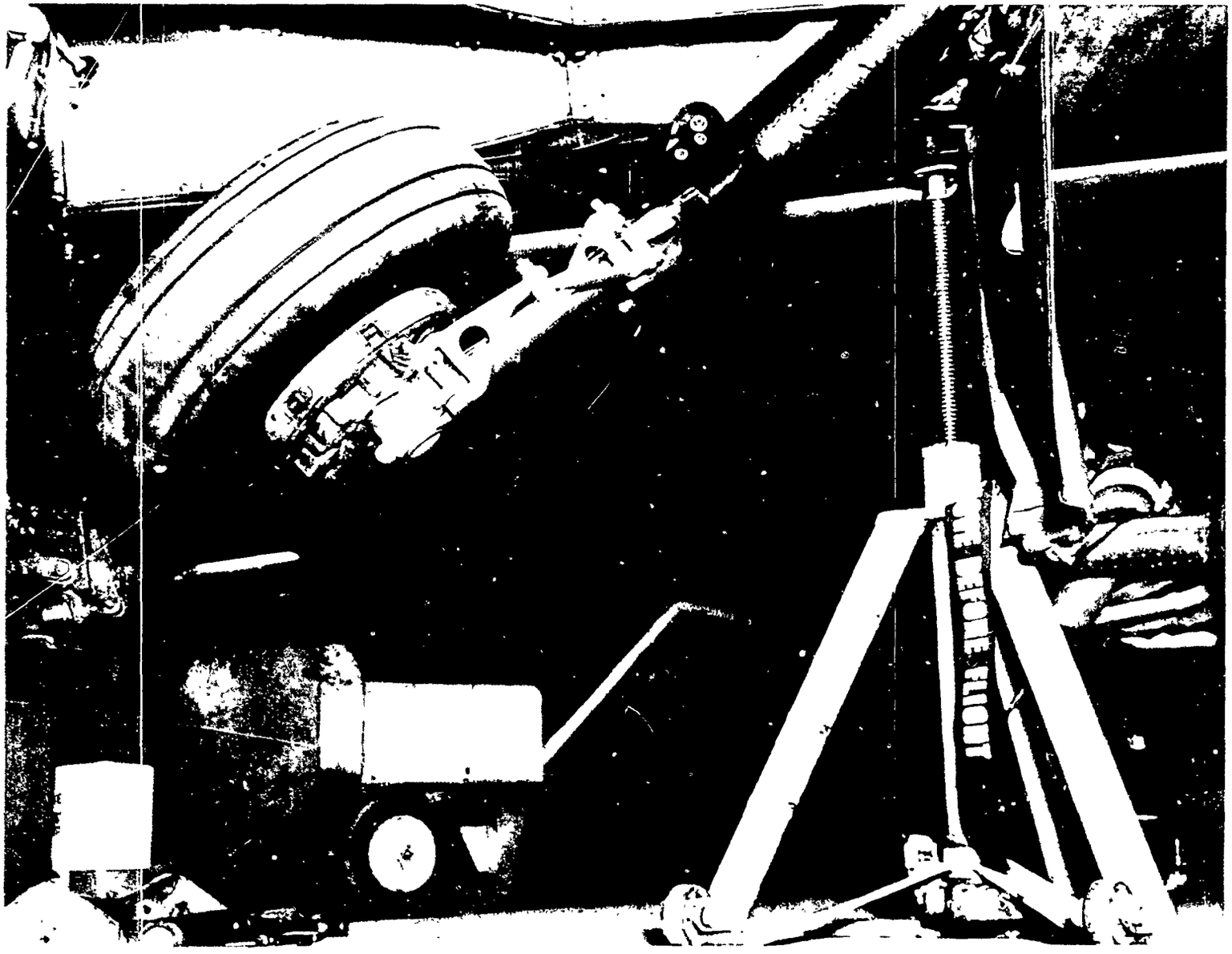

Figure 67. Graphite Composite Gear in Mid-Retraction Cycle

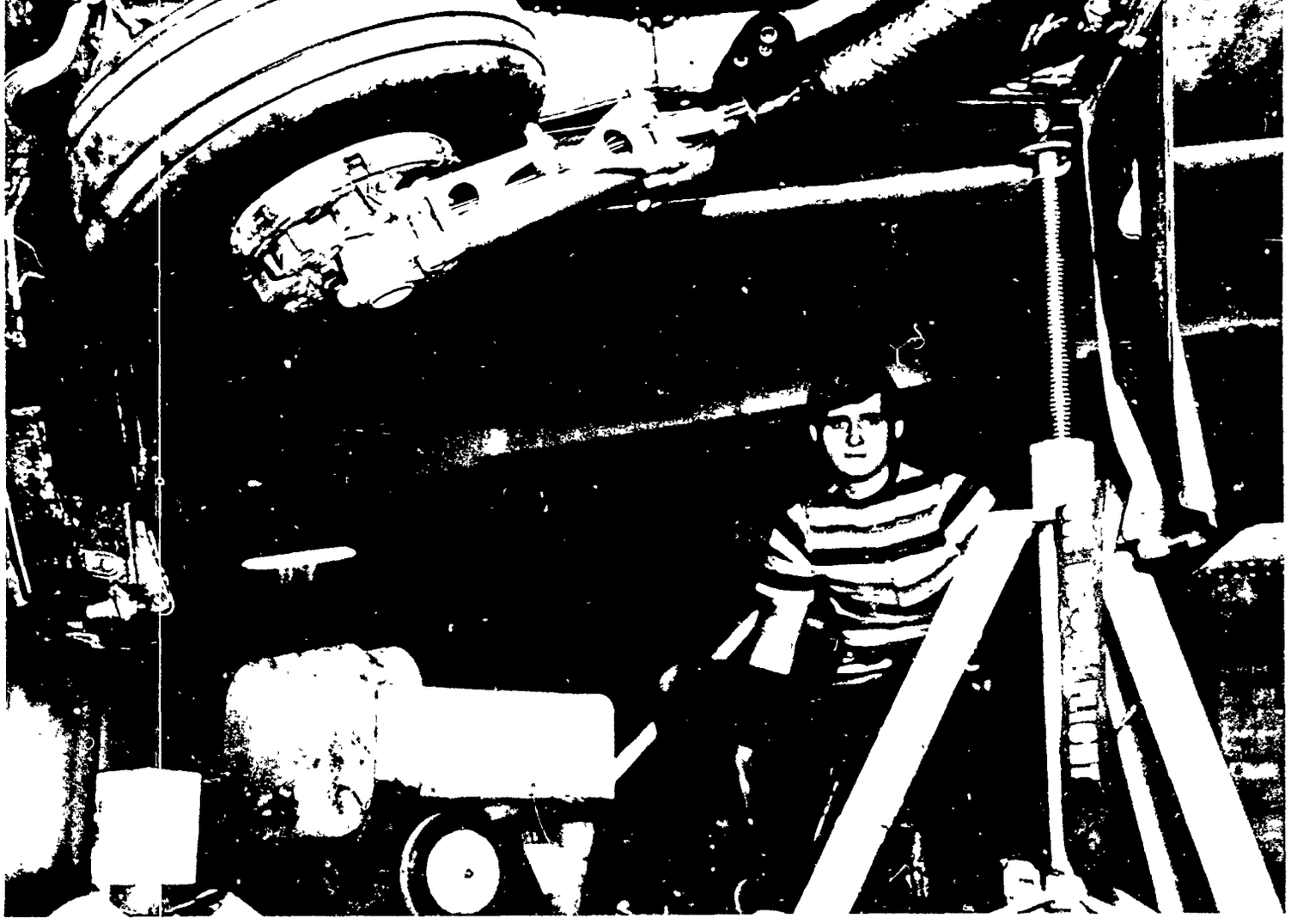

Figure 68. Graphite Composite Gear Entering Wing Well

Figure 69. Graphite Composite A37B Landing Gear Completely Retracted

The redesign of the upper cylinder/trunnion assembly proved compatible with wing attachment geometry and permitted proper installation in a production A37B left wing assembly (EPC-44 wing). Retraction tests were not performed since the assembly envelope was identical to the previous unit.

The 100 percent limit load tests were performed in accordance with Table 12 and the load conditions defined in Figure 54. Only strain and load data were recorded. Examination of the gear after 100 percent limit load tests for Conditions 1 and 2 showed the composite structure to be completely sound, with no evidence of damage or deformation. However, examination of the composite structure after completion of 100 percent limit load testing for Condition 3 (springback) disclosed a surface crack on the inboard side of the trunnion just above the side brace attachment. The approximate location of this crack is shown in Figure 70. There were no strain grids on this side of the outer cylinder/trunnion transition area. Figure 71 presents the strain gage locations and the strains recorded at 100 percent limit load for Condition 3. No abnormal strains were recorded, although a compressive strain of 0.53 percent was recorded by strain gage number 1. The strains are somewhat different from those found on the first outer cylinder/trunnion design, as shown in Table 10.

The load schedule for 150 percent limit load testing is presented in Table 13. Testing at 150 percent limit loads for Condition 1 was successful, with no new evidence of damage in the composite structure.

The testing at 150 percent of limit load for Condition 2 was not completed due to wing failure occurring between the 120 percent and 130 percent limits loads. After testing to 130 percent limit load, a surface crack was found on the outboard side of the trunnion just above the side brace attachment. Figure 72 shows the approximate location of the crack, which was directly under rosette strain gages 8 and 9. Unfortunately, these two strain gages had been destroyed during testing between 20 percent and 100 percent limit load, and data were not obtained when the crack occurred. These gages were repositioned in a different location, as shown in Figure 72. Since this wing had been used extensively as an experimental test fixture, no further analysis of the failure was conducted. Cessna replaced the failed wing with an ECP-47 left-hand wing assembly from aircraft 67-14823.

Since the replacement wing had accumulated significant fatigue damage as a prototype A-37 wing, it was decided to test the gear for Condition 3, 150 percent limit loading, before completion of Condition 2 ultimate testing.

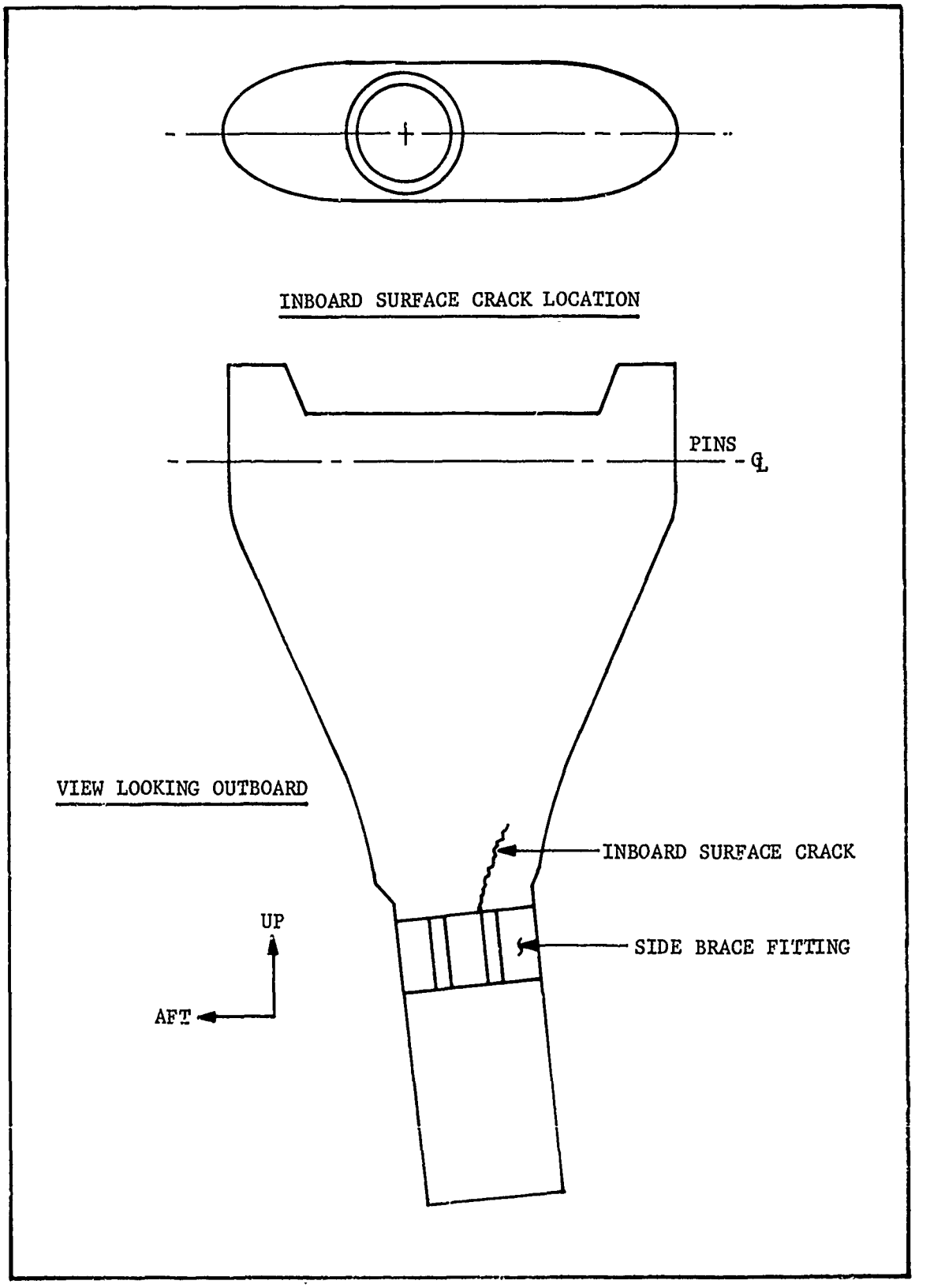

Figure 70. Damage Locations

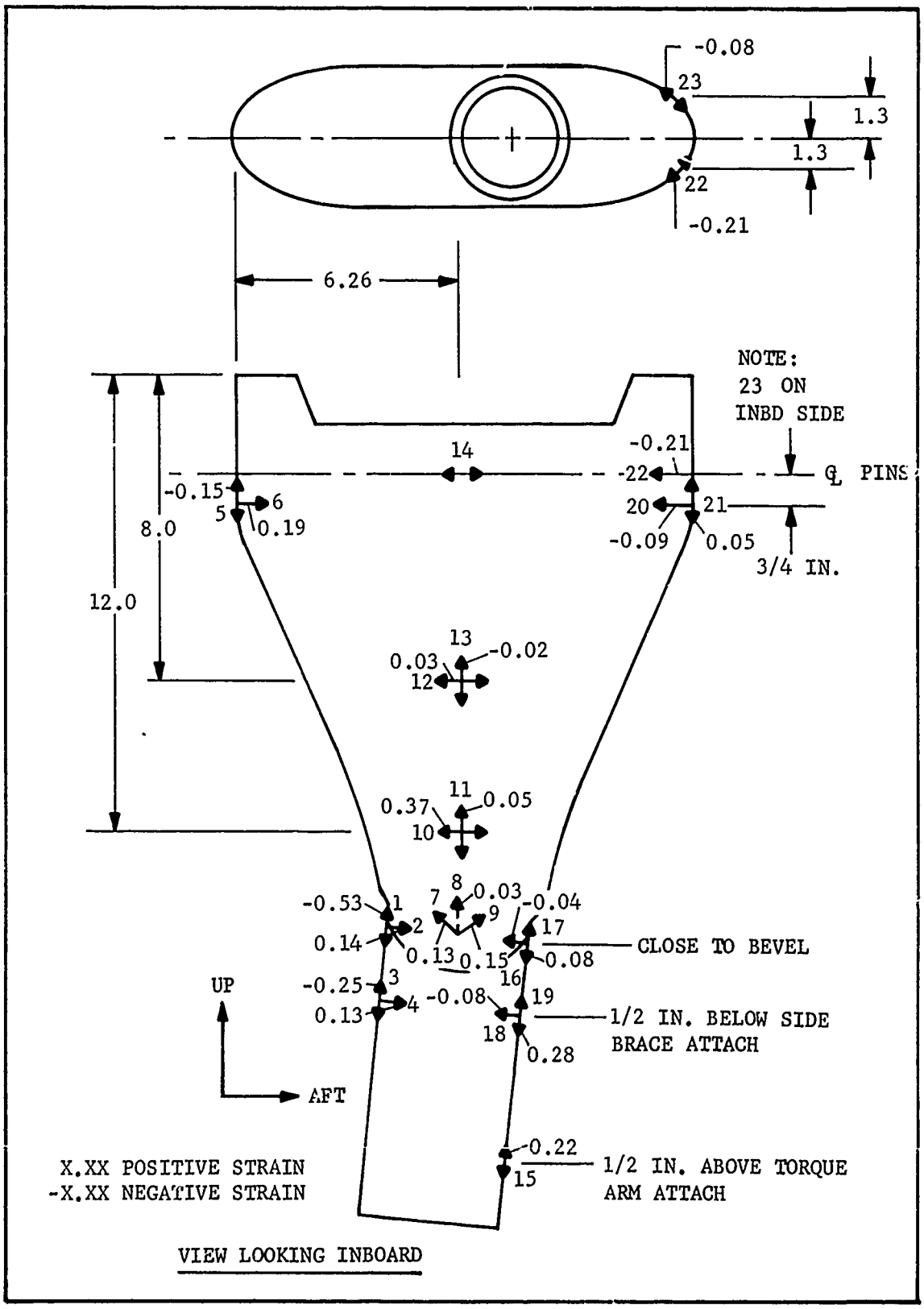

Figure 71. Strain Gage Locations, Condition 3 100% Limit Load Strains

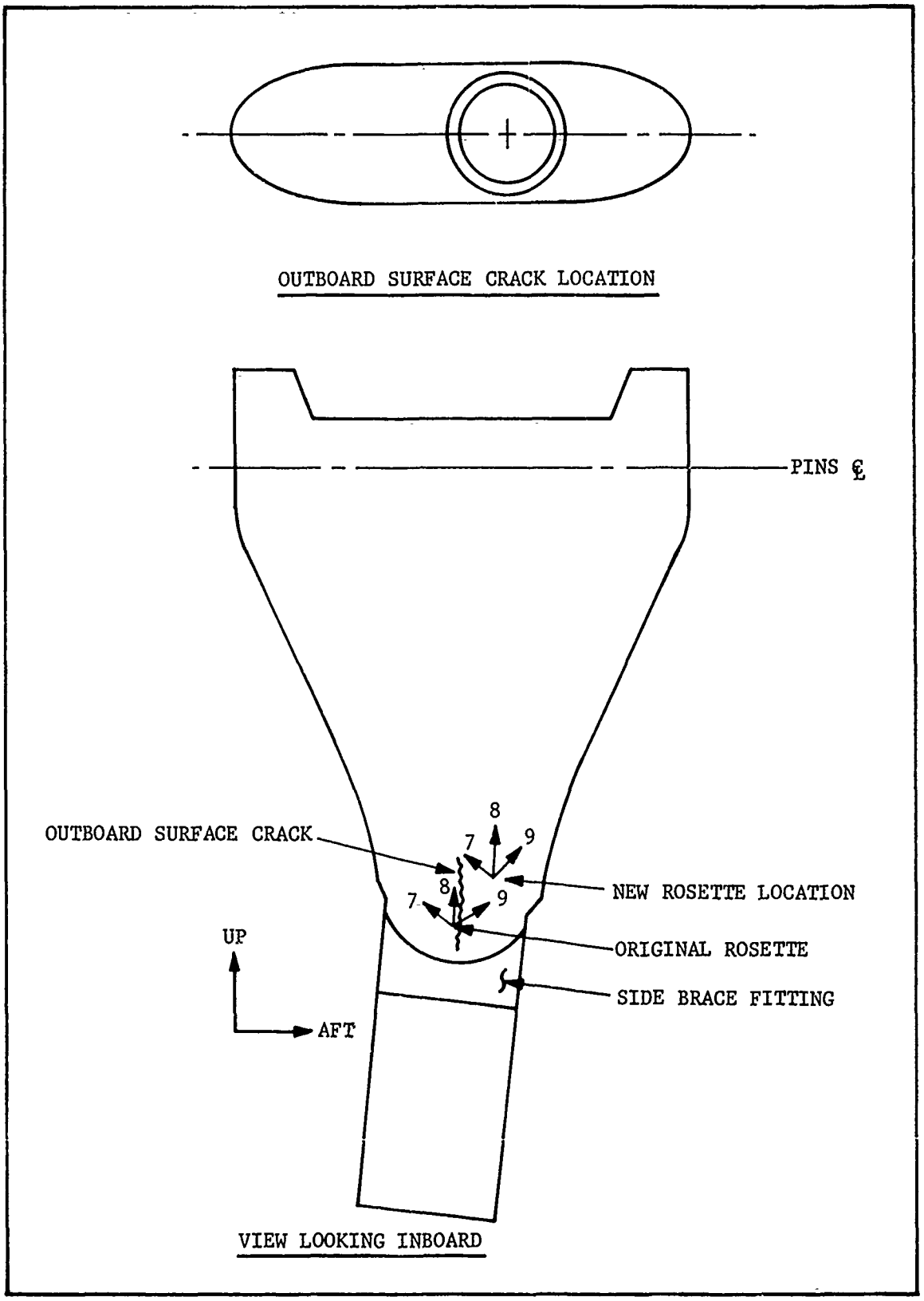

Figure 72. Damage Locations

TABLE 12

LOAD SCHEDULE FOR LIMIT STRENGTH TEST

Loading Sequence	Condition Number	Piston Stroke (in.)*	Load Direction	Load (lb)	Limit Load (%)	Load and Data Increments (%)
1	1	4.0	Pdr	6100	100	0, 20, 40, 60, 80, 100, 0, 20
2	2	4.0	Pdℓ	6600	100	0, 20, 40, 60, 80, 100, 0, 20
3	3	6.4	Prb	9000	100	0, 20, 40, 60, 80, 100, 0, 20

*Piston stroke from fully extended

TABLE 13

LOAD SCHEDULE FOR ULTIMATE STRENGTH TEST

Loading Sequence	Condition Number	Piston Stroke (in.)*	Load Direction	Load (lb)	Limit Load (%)	Load and Data Increments (%)
1	1	4.0	Pdr	9150	150	0, 20, 100, 110, 120, 130, 140, 150, 0, 20
2	2	4.0	Pdℓ	9900	150	0, 20, 100, 110, 120, 130, 140, 150, 0, 20
3	3	6.4	Prb	13500	150	0, 20, 100, 110, 120, 130, 140, 150, 0, 20

*Piston stroke from fully extended

While the ultimate load tests in Condition 3 were being conducted, the test gear failed at approximately 80 percent of limit load. The outer cylinder separated from the trunnion just above the side brace attachment.

The failure was attributed to interlaminar shear under the machined layers at the neck of the trunnion.

☆U.S.Government Printing Office: 1977 — 757-001/117